CONSULTANCY SERVICES FOR SURVEY, DESIGN AND EIA WORKS OF WATER SUPPLY AND SEWERAGE FACILITIES IN 5 ISLANDS, MALDIVES

PACKAGE 6

WATER SUPPLY SYSTEM OF GA. NILANDHOO,MALDIVES

For Ministry of National Planning and Housing Infrastructure, Republic of Maldives

EPOCH ASSOCIATES

T: +960 333 3528 **E**: info@epoch.associates **W**: wwww.epoch.associates
A: 4A, 4th Floor, M. Ahigasdhoshuge, Fareedhee Magu Male' Republic of Maldives

FEEDBACK INFRA
Making Infrastructure Happen

CONTENTS

OVERALL LAYOUT	
Water Supply Network Layout	01
Water Supply Network Zone Layout	02
Water Supply Network - Zone 01	03
Water Supply Network - Zone 02	04
Water Supply Network - Zone 03	05
Water Supply Network - Zone 04	06
Water Supply Network - Zone 05	07
Water Supply Network - Zone 06	08
Water Supply Network - Zone 07	09
Water Supply Network - Zone 08	10
Water Supply Network - Zone 09	11
DETAILED DRAWINGS FOR SPECIFIC COMPONENTS	
WATER SUPPLY HOUSE AND COMMERCIAL/ INSTITUTION CONNECTIONS	W-(1)
VALVE CHAMBER DETAILS	W-(2)
THRUST BLOCK DETAILS	W-(3)
INTERNAL PIPE LAYOUT	W-(4)
IWRM PLANT P&I OVERVIEW	W-(5)
IWRM PLANT P&I DETAIL A	W-(6)
IWRM PLANT P&I DETAIL B	W-(7)
IWRM PLANT P&I DETAIL C	W-(8)
IWRM PLANT P&I DETAIL D	W-(9)
IWRM PLANT P&I DETAIL E	W-(10)
IWRM PLANT P&I DETAIL F	W-(11)
IWRM PLANT P&I DETAIL G	W-(12)
BOREHOLE DETAILS	W-(13)
BRINE TANK DETAILS	W-(14)
PUMP SHED DETAILS	W-(15), W-(16), W-(17),
TREATED WATER TANK DETAILS	W-(18)
BALLAST BLOCK DETAILS	W-(19)
DIFFUSER DETAILS	W-(20)
BRINE SEA OUTFALL DETAILS	W-(21)
LIGHT POST DETAILS	W-(22)

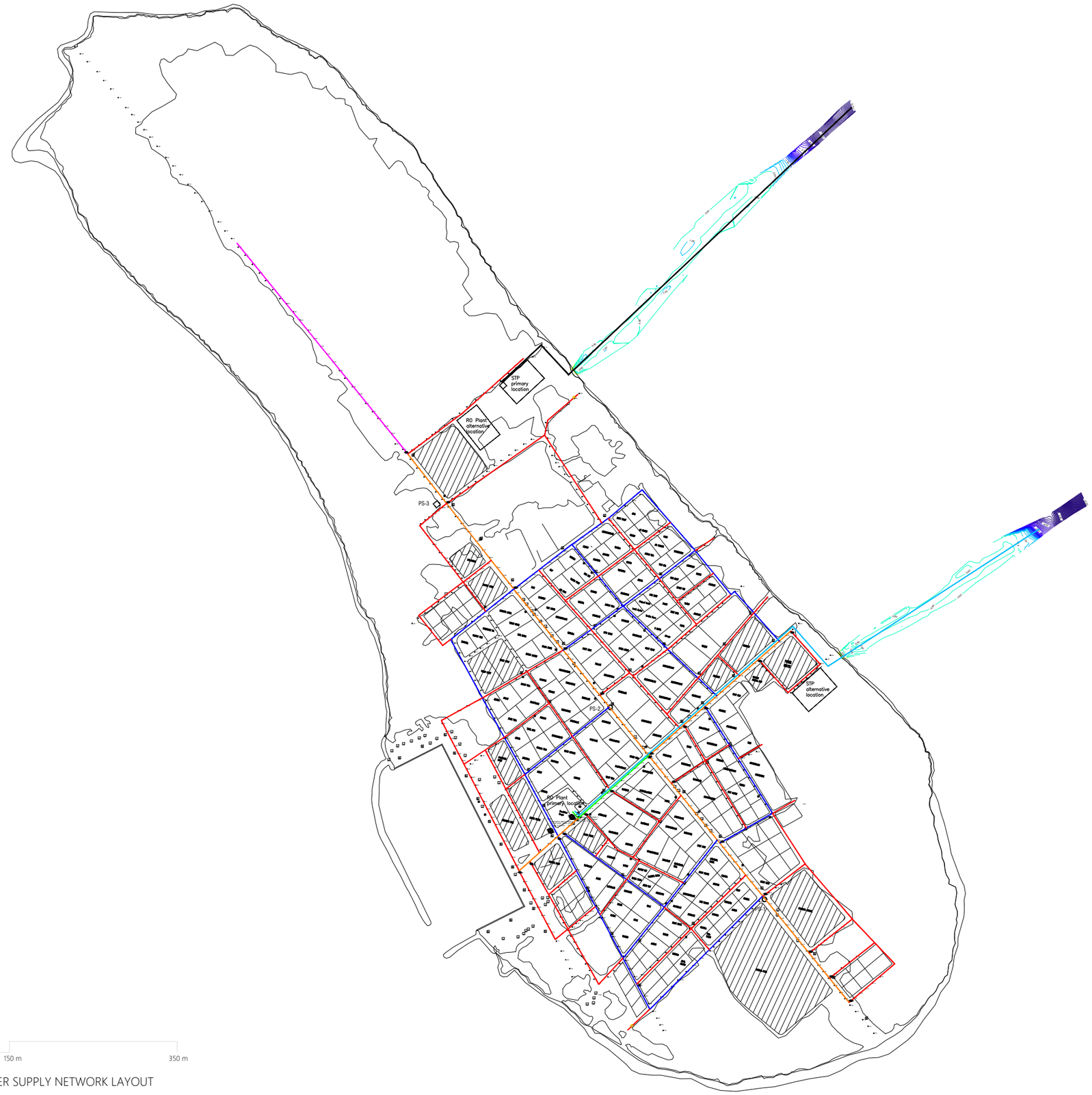

N

0 m 50 m 150 m 350 m

GA. NILANDHOO WATER SUPPLY NETWORK LAYOUT

1:5000

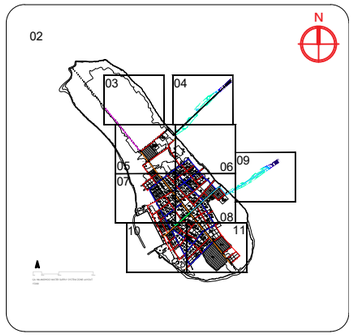

Legend

- Ø63 HDPE Water Main Distribution Pipe
- Ø90 HDPE Water Main Distribution Pipe
- Ø160 HDPE Water Main Distribution Pipe
- Ø75 HDPE Water Main Distribution Pipe
- Ø110 HDPE Water Main Distribution Pipe
- Ø110 HDPE Brine Outfall Pipe
- Gate Valves
- Washout Valves
- Junction

Notes:

1. All levels are shown in meters.
2. All levels are shown from mean sea level.
3. This drawing to be read in conjunction with all other relevant drawing and specifications.
4. All pressure pipes and fittings shall be installed using electro-fusion and butt-fusion technologies.
5. All pressure pipes shall be laid in between 0.7m - 1.0m below natural ground level to achieve best flat alignment based on topographic survey.
6. All the service connections to the mains shall be made using electro-fusion saddle and coupler.
7. Minimum size of the main water supply network shall be OD 63mm PE100, PN10, SDR17 HDPE pipe.
8. Minimum size of the house service line shall be OD 25mm PE100, PN16, SDR11 HDPE pipe.
9. Minimum size of commercial and other institutional connection service line shall be 50mm, PE100, PN16, SDR11 HDPE pipe.

MAINS DISTRIBUTION

DIAMETER (mm)	LENGTH HDPE (m)	TYPE OF PIPE
63	4823	HDPE (PE100,PN10,SDR17)
75	2361	
90	323	
110	1159	
160	123	
Total	8789	
Gate Valves	- 25 nos	
Washout Valves	- 02 nos	

OUTFALL

DIAMETER (mm)	LENGTH HDPE (m)	TYPE OF PIPE
110	711	HDPE (PE100,PN10,SDR11)

PSM BENCHMARKS

PERMANENT BENCH MARK 1
327149.526E, 70041.431N
1.031m From MSL

PERMANENT BENCH MARK 2
327175.055E, 70057.839N
1.306m From MSL

REV. NO.	Date	Revision Description	Drawn	Chkd	Appd.
R00	JUNE 2020	STAGE -1	PD	SBC	SD

Title:

Consultancy Services for Survey, Design and EIA works of Water Supply and Sewerage Facilities in 5 islands, Maldives - Package 6

Sub Title:

Water Supply System in Ga.Nilandhoo

Client:

Ministry of National Planning, Housing and Infrastructure, Republic of Maldives

EPOCH ASSOCIATES
T: +960 333 3528
E: info@epoch.associates
W: www.epoch.associates
A: G. Rosary West, Husnuheenaa Magu, Male', Maldives

FEEDBACK INFRA
Making Infrastructure Happen

Drawn:	F.I.A.	Checked:	M.S.S.
Designed:	F.I.A.	Approved:	I.W.
Date:	Aug 2020	SCALE (A3):	1:5000

Project No: EP-WS/2019/06

Rev.: R-01

Page: 01

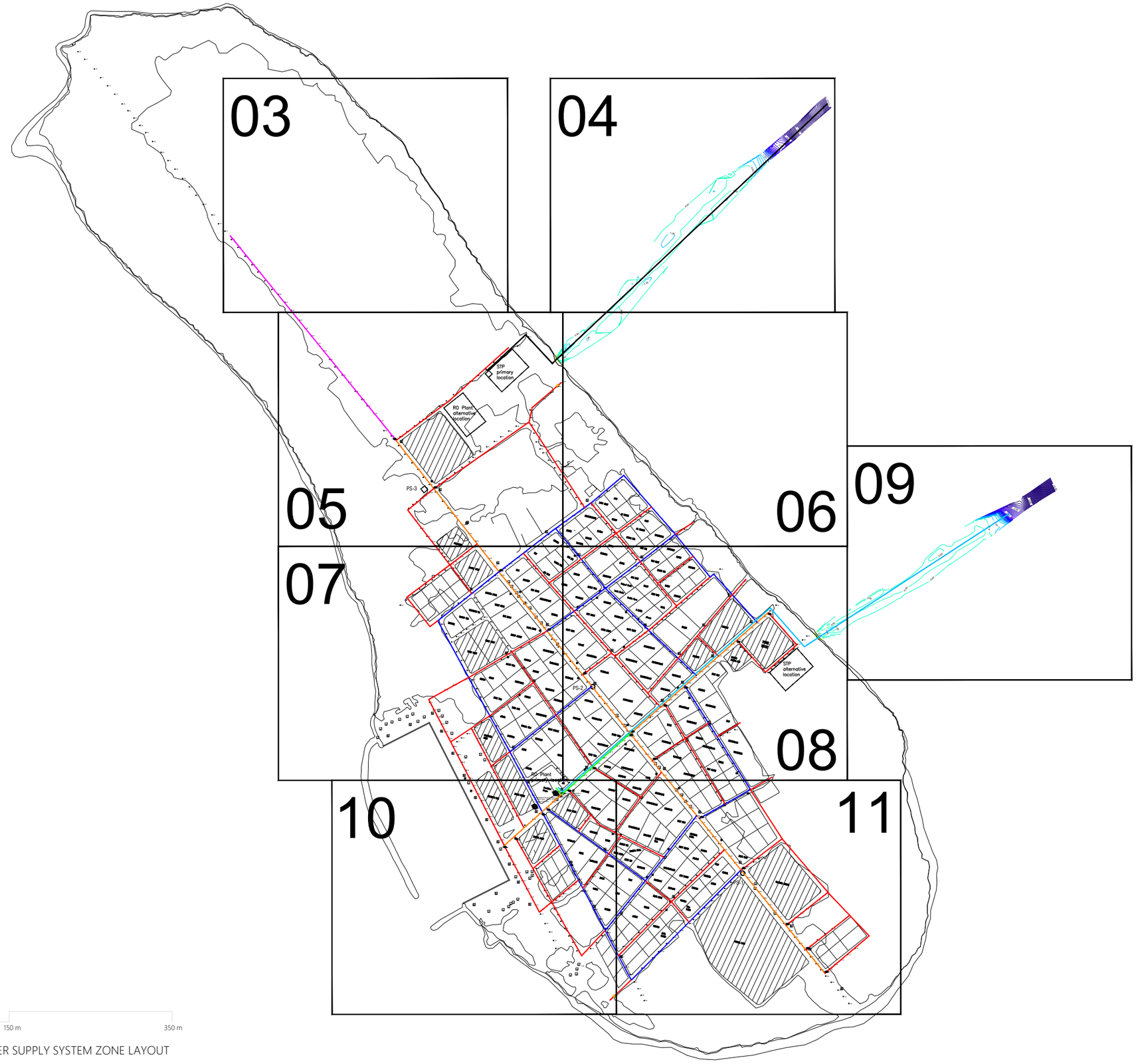

N

0 m 50 m 150 m 350 m

GA. NILANDHOO WATER SUPPLY SYSTEM ZONE LAYOUT

1:5000

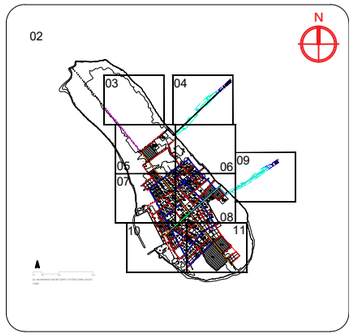

Legend

- Ø63 HDPE Water Main Distribution Pipe
- Ø90 HDPE Water Main Distribution Pipe
- Ø160 HDPE Water Main Distribution Pipe
- Gate Valves
- Junction
- Ø75 HDPE Water Main Distribution Pipe
- Ø110 HDPE Water Main Distribution Pipe
- Ø110 HDPE Brine Outfall Pipe
- Washout Valves

Notes:

1. All levels are shown in meters.
2. All levels are shown from mean sea level.
3. This drawing to be read in conjunction with all other relevant drawing and specifications.
4. All pressure pipes and fittings shall be installed using electro-fusion and butt-fusion technologies.
5. All pressure pipes shall be laid in between 0.7m - 1.0m below natural ground level to achieve best flat alignment based on topographic survey.
6. All the service connections to the mains shall be made using electro-fusion saddle and coupler.
7. Minimum size of the main water supply network shall be OD 63mm PE100, PN10, SDR17 HDPE pipe.
8. Minimum size of the house service line shall be OD 25mm PE100, PN16, SDR11 HDPE pipe.
9. Minimum size of commercial and other institutional connection service line shall be 50mm, PE100, PN16, SDR11 HDPE pipe.

MAINS DISTRIBUTION

DIAMETER (mm)	LENGTH HDPE (m)	TYPE OF PIPE
63	4823	HDPE (PE100,PN10,SDR17)
75	2361	
90	323	
110	1159	
160	123	
Total	8789	

Gate Valves	- 25 nos
Washout Valves	- 02 nos

OUTFALL

DIAMETER (mm)	LENGTH HDPE (m)	TYPE OF PIPE
110	711	HDPE (PE100,PN10,SDR11)

PSM BENCHMARKS

PERMANENT BENCH MARK 1
327149.526E, 70041.431N
1.031m From MSL

PERMANENT BENCH MARK 2
327175.055E, 70057.839N
1.306m From MSL

REV. NO.	Date	Revision Description	Drawn	Chkd	Appd.
R00	JUNE 2020	STAGE -1	PD	SBC	SD

Title:

Consultancy Services for Survey, Design and EIA works of Water Supply and Sewerage Facilities in 5 islands, Maldives - Package 6

Sub Title:

Water Supply System in Ga.Nilandhoo

Client:

Ministry of National Planning, Housing and Infrastructure, Republic of Maldives

EPOCH ASSOCIATES
T: +960 333 3528
E: info@epoch.associates
W: www.epoch.associates
A: G. Rosary West,
Husnuheenaa Magu, Male', Maldives

FEEDBACK INFRA

Drawn: F.I.A.	Checked: M.S.S.
Designed: F.I.A.	Approved: I.W.
Date: Aug 2020	SCALE (A3): 1:5000
Project No: EP-WS/2019/06	
Rev: R-01	Page: 02

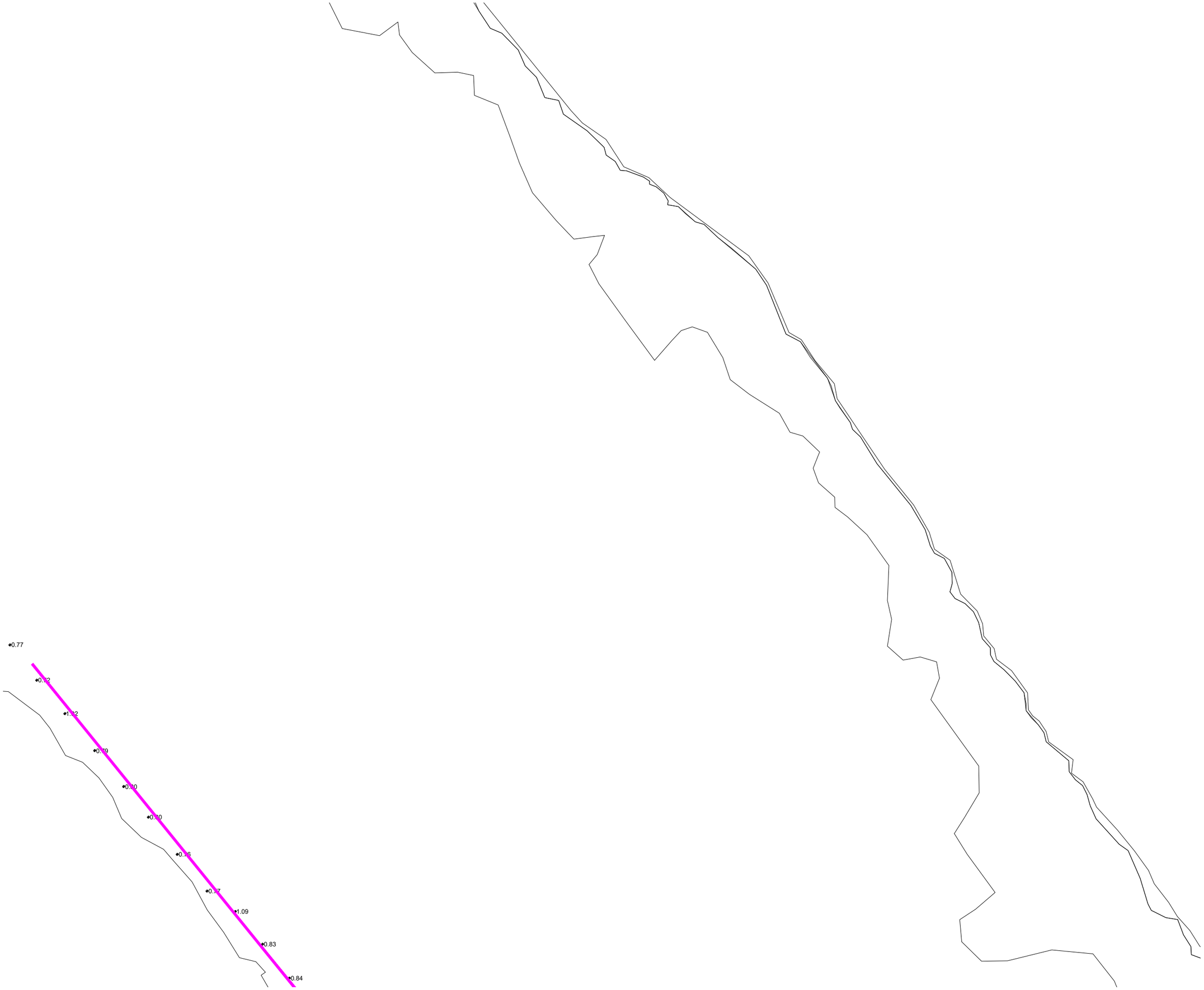

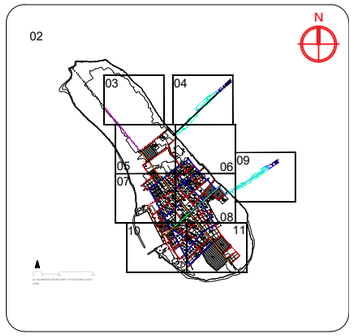

Legend

- Ø63 HDPE Water Main Distribution Pipe
- Ø75 HDPE Water Main Distribution Pipe
- Ø90 HDPE Water Main Distribution Pipe
- Ø110 HDPE Water Main Distribution Pipe
- Ø160 HDPE Water Main Distribution Pipe
- Ø110 HDPE Brine Outfall Pipe
- Gate Valves
- Washout Valves
- Junction

Notes:

1. All levels are shown in meters.
2. All levels are shown from mean sea level.
3. This drawing to be read in conjunction with all other relevant drawing and specifications.
4. All pressure pipes and fittings shall be installed using electro-fusion and butt-fusion technologies.
5. All pressure pipes shall be laid in between 0.7m - 1.0m below natural ground level to achieve best flat alignment based on topographic survey.
6. All the service connections to the mains shall be made using electro-fusion saddle and coupler.
7. Minimum size of the main water supply network shall be OD 63mm PE100, PN10, SDR17 HDPE pipe.
8. Minimum size of the house service line shall be OD 25mm PE100, PN16, SDR11 HDPE pipe.
9. Minimum size of commercial and other institutional connection service line shall be 50mm, PE100, PN16, SDR11 HDPE pipe.

MAINS DISTRIBUTION

DIAMETER (mm)	LENGTH HDPE (m)	TYPE OF PIPE
63	4823	HDPE (PE100,PN10,SDR17)
75	2361	
90	323	
110	1159	
160	123	
Total	8789	

Gate Valves	- 25 nos
Washout Valves	- 02 nos

OUTFALL

DIAMETER (mm)	LENGTH HDPE (m)	TYPE OF PIPE
110	711	HDPE (PE100,PN10,SDR11)

PSM BENCHMARKS

PERMANENT BENCH MARK 1
327149.526E, 70041.431N
1.031m From MSL

PERMANENT BENCH MARK 2
327175.055E, 70057.839N
1.306m From MSL

REV. NO.	Date	Revision Description	Drawn	Chkd	Appd.
R00	JUNE 2020	STAGE -1	PD	SBC	SD

Title:

Consultancy Services for Survey, Design and EIA works of Water Supply and Sewerage Facilities in 5 islands, Maldives - Package 6

Sub Title:

Water Supply System in Ga.Nilandhoo

Client:

Ministry of National Planning, Housing and Infrastructure, Republic of Maldives

EPOCH ASSOCIATES

T: +960 333 3528
E: info@epoch.associates
W: wwww.epoch.associates
A: G. Rosary West,
Husnuheenaa Magu, Male', Maldives

FEEDBACK INFRA
Walking the infrastructure stepper

Drawn: F.I.A.	Checked: M.S.S.
Designed: F.I.A.	Approved: I.W.
Date: Aug 2020	SCALE (A3): 1:1000

Project No: EP-WS/2019/06

Rev: **R-01**

Page: **03**

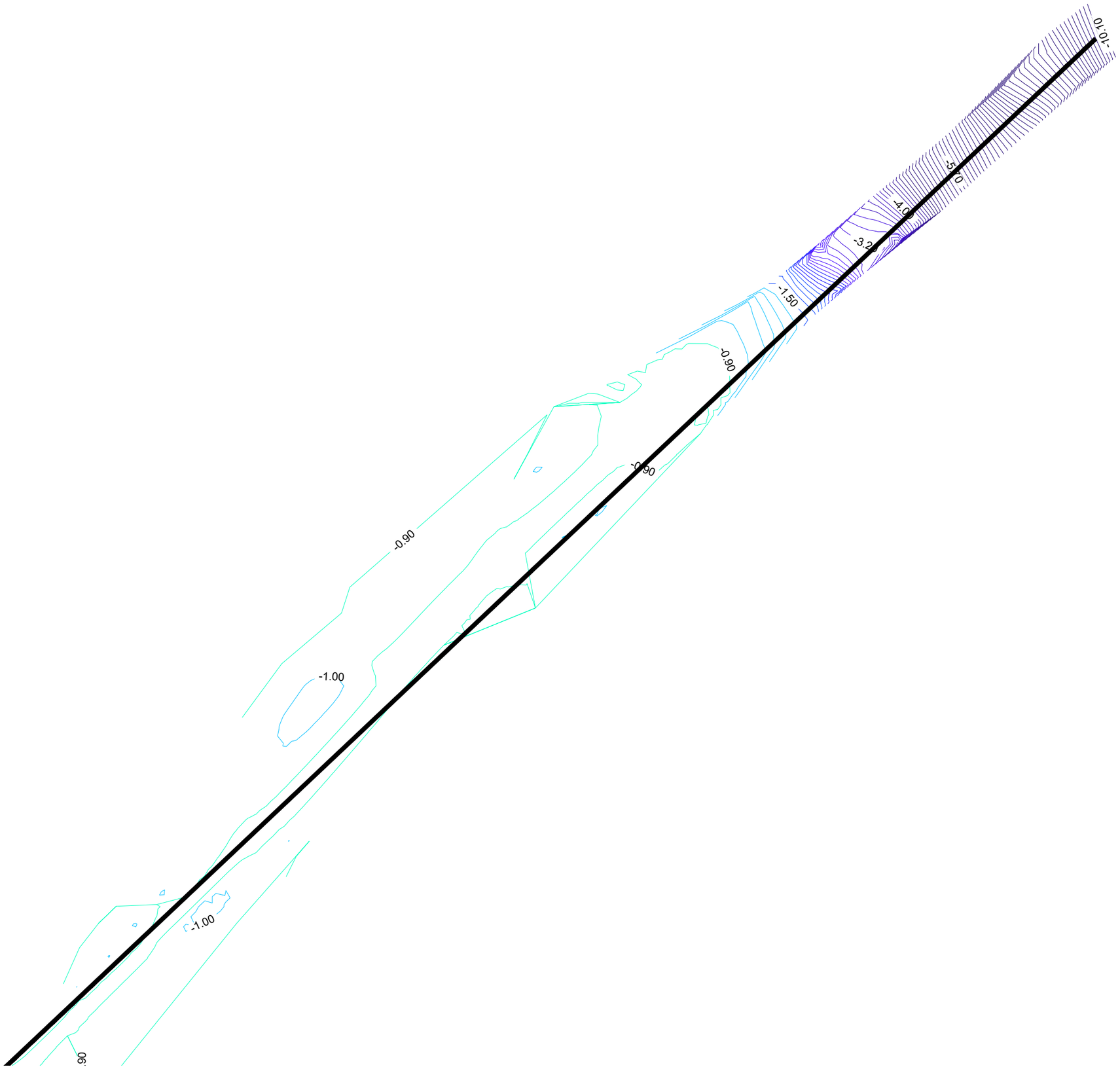

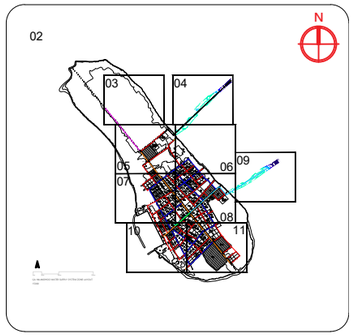

Legend

- Ø63 HDPE Water Main Distribution Pipe
- Ø90 HDPE Water Main Distribution Pipe
- Ø160 HDPE Water Main Distribution Pipe
- Ø75 HDPE Water Main Distribution Pipe
- Ø110 HDPE Water Main Distribution Pipe
- Ø110 HDPE Brine Outfall Pipe
- Gate Valves
- Washout Valves
- Junction

Notes:

1. All levels are shown in meters.
2. All levels are shown from mean sea level.
3. This drawing to be read in conjunction with all other relevant drawing and specifications.
4. All pressure pipes and fittings shall be installed using electro-fusion and butt-fusion technologies.
5. All pressure pipes shall be laid in between 0.7m - 1.0m below natural ground level to achieve best flat alignment based on topographic survey.
6. All the service connections to the mains shall be made using electro-fusion saddle and coupler.
7. Minimum size of the main water supply network shall be OD 63mm PE100, PN10, SDR17 HDPE pipe.
8. Minimum size of the house service line shall be OD 25mm PE100, PN16, SDR11 HDPE pipe.
9. Minimum size of commercial and other institutional connection service line shall be 50mm, PE100, PN16, SDR11 HDPE pipe.

MAINS DISTRIBUTION

DIAMETER (mm)	LENGTH HDPE (m)	TYPE OF PIPE
63	4823	HDPE (PE100,PN10,SDR17)
75	2361	
90	323	
110	1159	
160	123	
Total	8789	

Gate Valves	- 25 nos
Washout Valves	- 02 nos

OUTFALL

DIAMETER (mm)	LENGTH HDPE (m)	TYPE OF PIPE
110	711	HDPE (PE100,PN10,SDR11)

PSM BENCHMARKS

PERMANENT BENCH MARK 1
327149.526E, 70041.431N
1.031m From MSL

PERMANENT BENCH MARK 2
327175.055E, 70057.839N
1.306m From MSL

REV. NO.	Date	Revision Description	Drawn	Chkd	Appd.
R00	JUNE 2020	STAGE -1	PD	SBC	SD

Title:

Consultancy Services for Survey, Design and EIA works of Water Supply and Sewerage Facilities in 5 islands, Maldives - Package 6

Sub Title:

Water Supply System in Ga.Nilandhoo

Client:

Ministry of National Planning, Housing and Infrastructure, Republic of Maldives

EPOCH Associates
T: +960 333 3528
E: info@epoch.associates
W: www.epoch.associates
A: G. Rosary West,
Husnuheenaa Magu, Male', Maldives

FEEDBACK INFRA
Malaiy Shift Construct Sloppy

Drawn: F.I.A.	Checked: M.S.S.
Designed: F.I.A.	Approved: I.W.
Date: Aug 2020	SCALE (A3): 1:1000
Project No: EP-WS/2019/06	
Rev: R-01	Page: 04

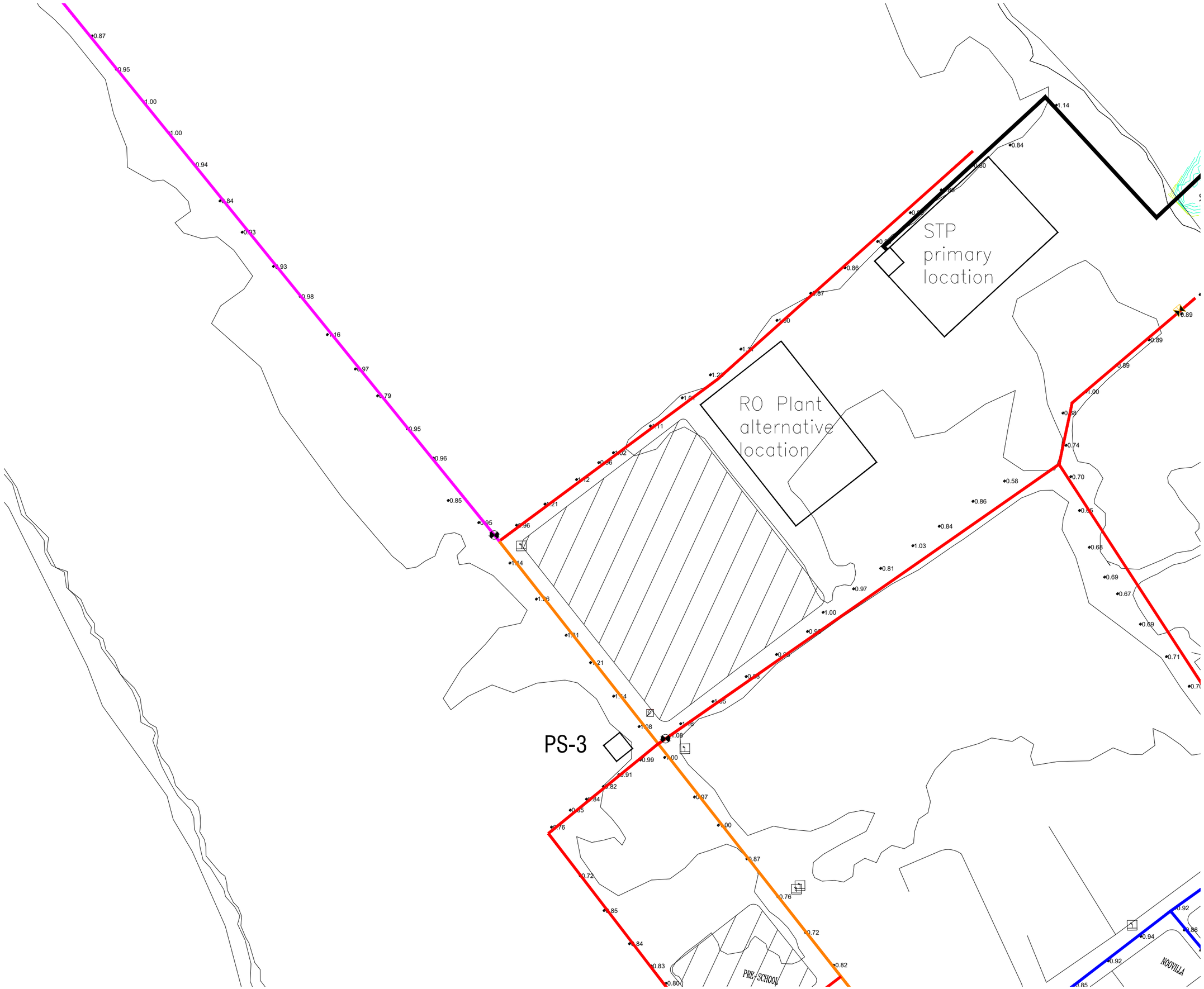

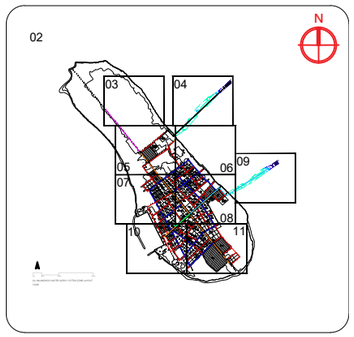

Legend

- Ø63 HDPE Water Main Distribution Pipe
- Ø90 HDPE Water Main Distribution Pipe
- Ø160 HDPE Water Main Distribution Pipe
- Ø75 HDPE Water Main Distribution Pipe
- Ø110 HDPE Water Main Distribution Pipe
- Ø110 HDPE Brine Outfall Pipe
- Gate Valves
- Washout Valves
- Junction

Notes:

1. All levels are shown in meters.
2. All levels are shown from mean sea level.
3. This drawing to be read in conjunction with all other relevant drawing and specifications.
4. All pressure pipes and fittings shall be installed using electro-fusion and butt-fusion technologies.
5. All pressure pipes shall be laid in between 0.7m - 1.0m below natural ground level to achieve best flat alignment based on topographic survey.
6. All the service connections to the mains shall be made using electro-fusion saddle and coupler.
7. Minimum size of the main water supply network shall be OD 63mm PE100, PN10, SDR17 HDPE pipe.
8. Minimum size of the house service line shall be OD 25mm PE100, PN16, SDR11 HDPE pipe.
9. Minimum size of commercial and other institutional connection service line shall be 50mm, PE100, PN16, SDR11 HDPE pipe.

MAINS DISTRIBUTION

DIAMETER (mm)	LENGTH HDPE (m)	TYPE OF PIPE
63	4823	HDPE (PE100,PN10,SDR17)
75	2361	
90	323	
110	1159	
160	123	
Total	8789	
Gate Valves	- 25 nos	
Washout Valves	- 02 nos	

OUTFALL

DIAMETER (mm)	LENGTH HDPE (m)	TYPE OF PIPE
110	711	HDPE (PE100,PN10,SDR11)

PSM BENCHMARKS

PERMANENT BENCH MARK 1
327149.526E, 70041.431N
1.031m From MSL

PERMANENT BENCH MARK 2
327175.055E, 70057.839N
1.306m From MSL

REV. NO.	Date	Revision Description	Drawn	Chkd	Appd.
R00	JUNE 2020	STAGE -1	PD	SBC	SD

Title:

Consultancy Services for Survey, Design and EIA works of Water Supply and Sewerage Facilities in 5 islands, Maldives - Package 6

Sub Title:

Water Supply System in Ga.Nilandhoo

Client:

Ministry of National Planning, Housing and Infrastructure, Republic of Maldives

EPOCH ASSOCIATES
T: +960 333 3528
E: info@epoch.associates
W: www.epoch.associates
A: G. Rosary West,
Husnuheenaa Magu, Male', Maldives

FEEDBACK INFRA
Making Infrastructure Happen

Drawn: F.I.A.	Checked: M.S.S.
Designed: F.I.A.	Approved: I.W.
Date: Aug 2020	SCALE (A3): 1:1000
Project No: EP-WS/2019/06	
Rev: R-01	Page: 05

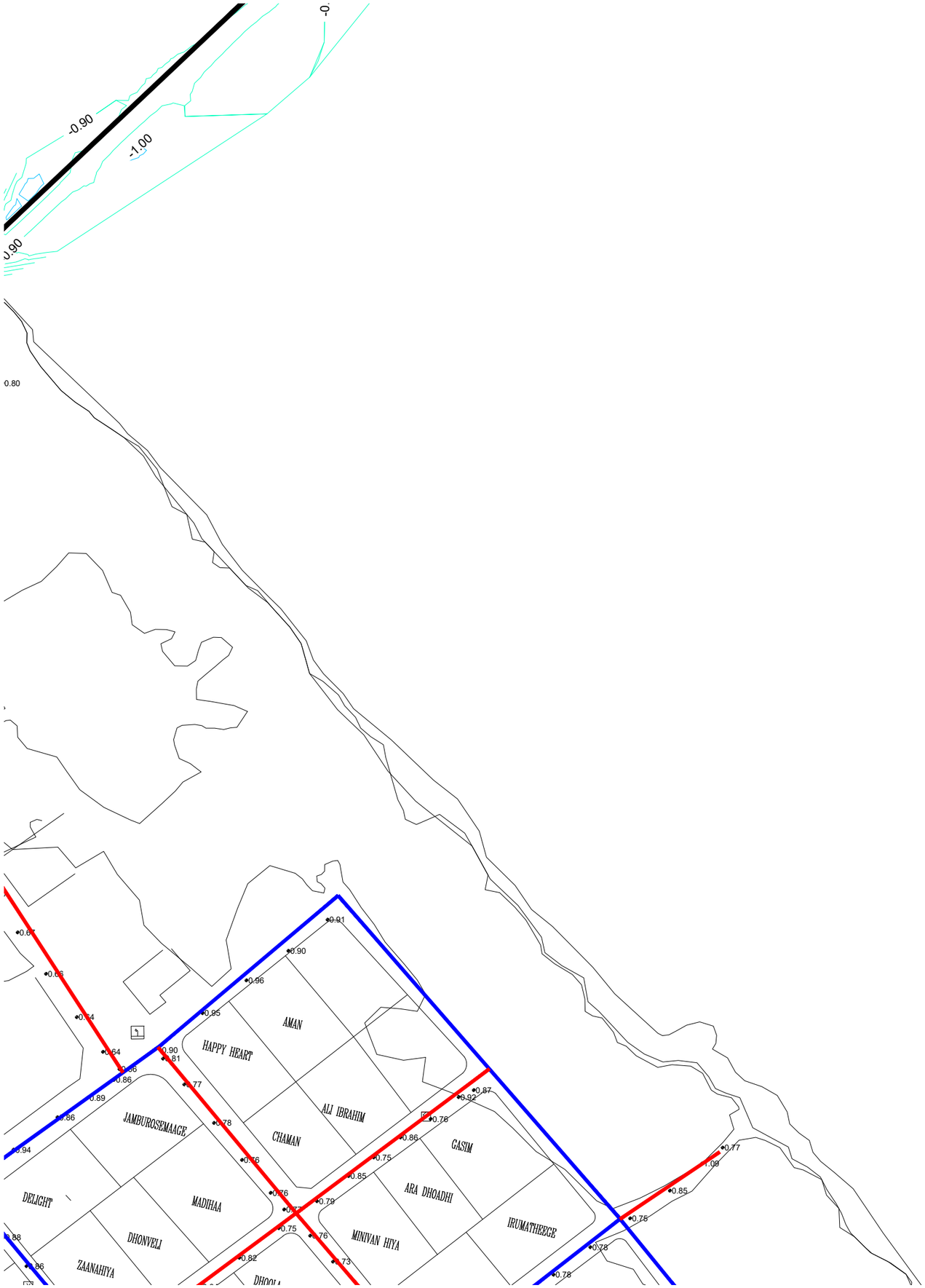

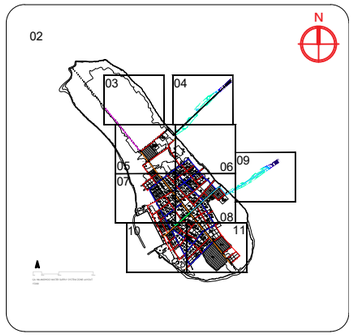

Legend

- Ø63 HDPE Water Main Distribution Pipe
- Ø90 HDPE Water Main Distribution Pipe
- Ø160 HDPE Water Main Distribution Pipe
- Ø75 HDPE Water Main Distribution Pipe
- Ø110 HDPE Water Main Distribution Pipe
- Ø110 HDPE Brine Outfall Pipe
- Gate Valves
- Washout Valves
- Junction

Notes:

1. All levels are shown in meters.
2. All levels are shown from mean sea level.
3. This drawing to be read in conjunction with all other relevant drawing and specifications.
4. All pressure pipes and fittings shall be installed using electro-fusion and butt-fusion technologies.
5. All pressure pipes shall be laid in between 0.7m - 1.0m below natural ground level to achieve best flat alignment based on topographic survey.
6. All the service connections to the mains shall be made using electro-fusion saddle and coupler.
7. Minimum size of the main water supply network shall be OD 63mm PE100, PN10, SDR17 HDPE pipe.
8. Minimum size of the house service line shall be OD 25mm PE100, PN16, SDR11 HDPE pipe.
9. Minimum size of commercial and other institutional connection service line shall be 50mm, PE100, PN16, SDR11 HDPE pipe.

MAINS DISTRIBUTION

DIAMETER (mm)	LENGTH HDPE (m)	TYPE OF PIPE
63	4823	HDPE (PE100,PN10,SDR17)
75	2361	
90	323	
110	1159	
160	123	
Total	8789	

Gate Valves	- 25 nos
Washout Valves	- 02 nos

OUTFALL

DIAMETER (mm)	LENGTH HDPE (m)	TYPE OF PIPE
110	711	HDPE (PE100,PN10,SDR11)

PSM BENCHMARKS

PERMANENT BENCH MARK 1
327149.526E, 70041.431N
1.031m From MSL

PERMANENT BENCH MARK 2
327175.055E, 70057.839N
1.306m From MSL

REV. NO.	Date	Revision Description	Drawn	Chkd	Appd.
R00	JUNE 2020	STAGE -1	PD	SBC	SD

Title:

Consultancy Services for Survey, Design and EIA works of Water Supply and Sewerage Facilities in 5 islands, Maldives - Package 6

Sub Title:

Water Supply System in Ga.Nilandhoo

Client:

Ministry of National Planning, Housing and Infrastructure, Republic of Maldives

EPOCH ASSOCIATES
T: +960 333 3528
E: info@epoch.associates
W: wwww.epoch.associates
A: G. Rosary West,
Husnuheenaa Magu, Male', Maldives

FEEDBACK INFRA
Walking Infrastructure Happiness

Drawn: F.I.A.	Checked: M.S.S.
Designed: F.I.A.	Approved: I.W.
Date: Aug 2020	SCALE (A3): 1:1000

Project No: EP-WS/2019/06

Rev: **R-01**

Page: **06**

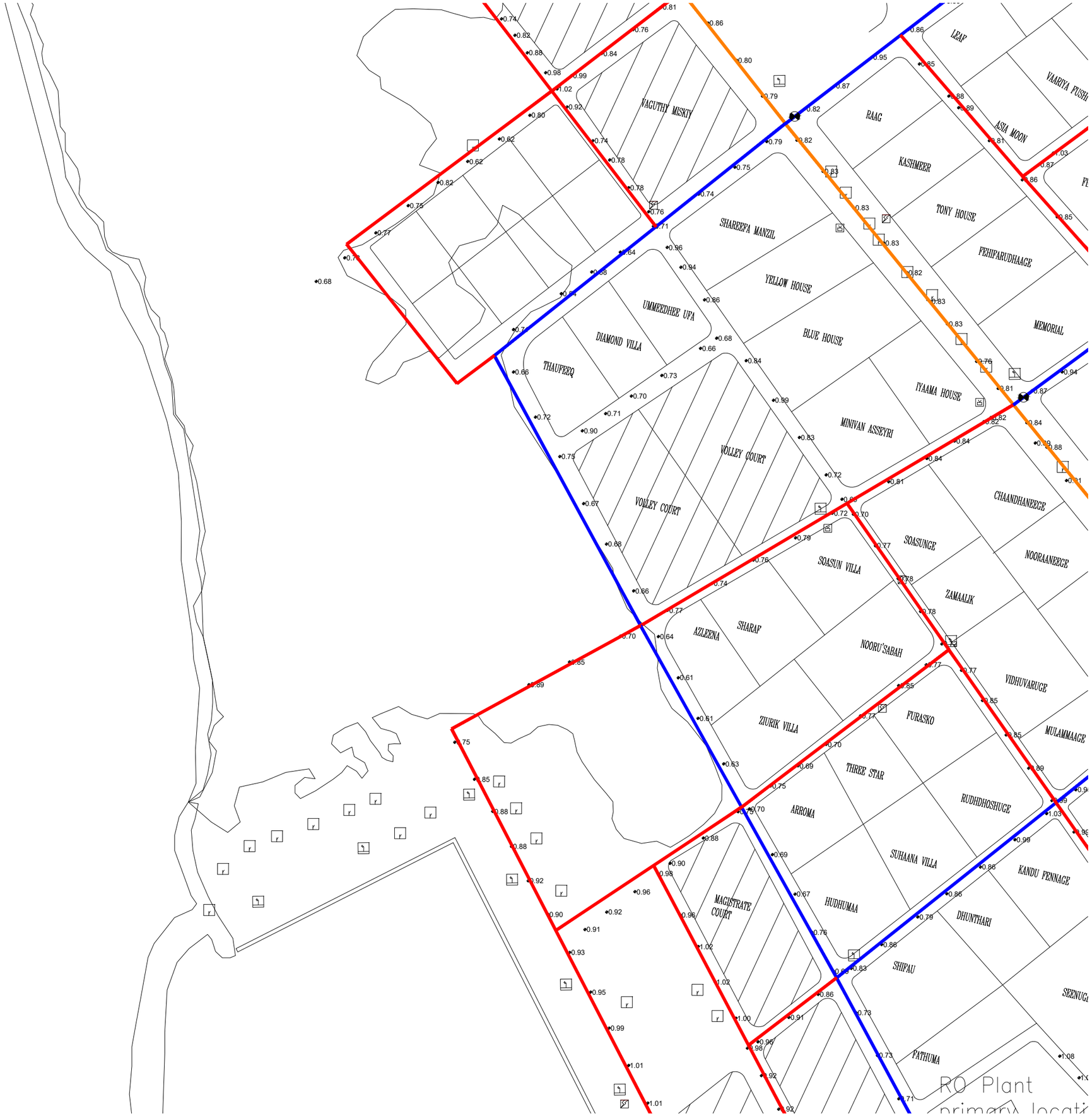

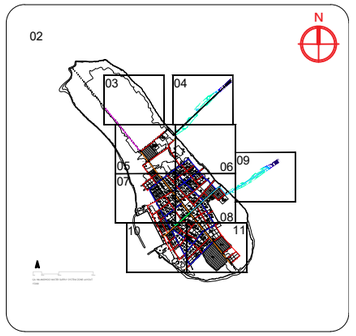

Legend

- Ø63 HDPE Water Main Distribution Pipe
- Ø90 HDPE Water Main Distribution Pipe
- Ø160 HDPE Water Main Distribution Pipe
- Gate Valves
- Junction
- Ø75 HDPE Water Main Distribution Pipe
- Ø110 HDPE Water Main Distribution Pipe
- Ø110 HDPE Brine Outfall Pipe
- Washout Valves

Notes:

1. All levels are shown in meters.
2. All levels are shown from mean sea level.
3. This drawing to be read in conjunction with all other relevant drawing and specifications.
4. All pressure pipes and fittings shall be installed using electro-fusion and butt-fusion technologies.
5. All pressure pipes shall be laid in between 0.7m - 1.0m below natural ground level to achieve best flat alignment based on topographic survey.
6. All the service connections to the mains shall be made using electro-fusion saddle and coupler.
7. Minimum size of the main water supply network shall be OD 63mm PE100, PN10, SDR17 HDPE pipe.
8. Minimum size of the house service line shall be OD 25mm PE100, PN16, SDR11 HDPE pipe.
9. Minimum size of commercial and other institutional connection service line shall be 50mm, PE100, PN16, SDR11 HDPE pipe.

MAINS DISTRIBUTION

DIAMETER (mm)	LENGTH HDPE (m)	TYPE OF PIPE
63	4823	HDPE (PE100,PN10,SDR17)
75	2361	
90	323	
110	1159	
160	123	
Total	8789	
Gate Valves	- 25 nos	
Washout Valves	- 02 nos	

OUTFALL

DIAMETER (mm)	LENGTH HDPE (m)	TYPE OF PIPE
110	711	HDPE (PE100,PN10,SDR11)

PSM BENCHMARKS

PERMANENT BENCH MARK 1
327149.526E, 70041.431N
1.031m From MSL

PERMANENT BENCH MARK 2
327175.055E, 70057.839N
1.306m From MSL

REV. NO.	Date	Revision Description	Drawn	Chkd	Appd.
R00	JUNE 2020	STAGE -1	PD	SBC	SD

Title:

Consultancy Services for Survey, Design and EIA works of Water Supply and Sewerage Facilities in 5 islands, Maldives - Package 6

Sub Title:

Water Supply System in Ga.Nilandhoo

Client:

Ministry of National Planning, Housing and Infrastructure, Republic of Maldives

EPOCH ASSOCIATES
T: +960 333 3528
E: info@epoch.associates
W: www.epoch.associates
A: G. Rosary West, Husnuheenaa Magu, Male', Maldives

FEEDBACK INFRA
Making Infrastructure Happen

Drawn: F.I.A.	Checked: M.S.S.
Designed: F.I.A.	Approved: I.W.
Date: Aug 2020	SCALE (A3): 1:1000
Project No: EP-WS/2019/06	
Rev: R-01	Page: 07

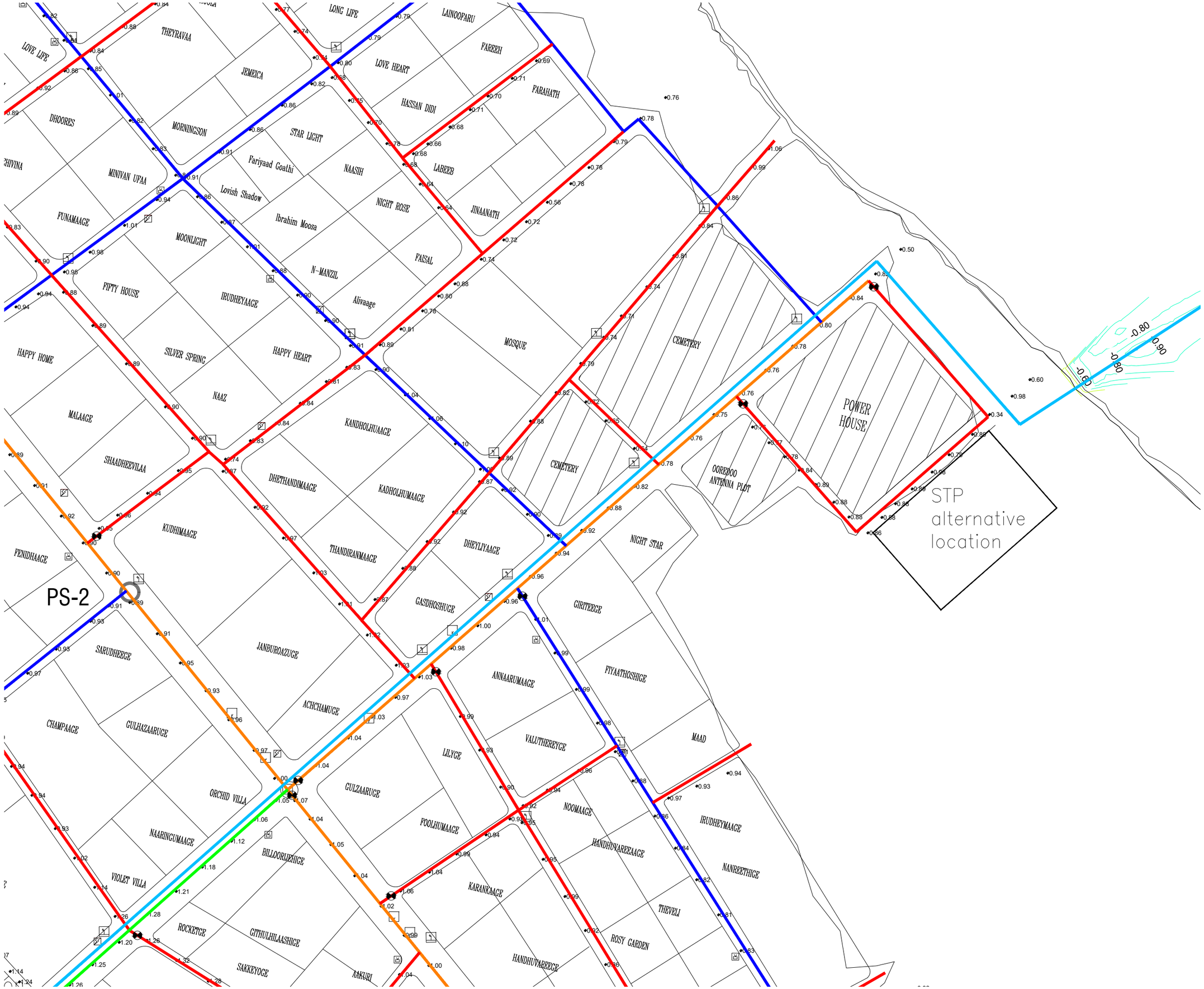

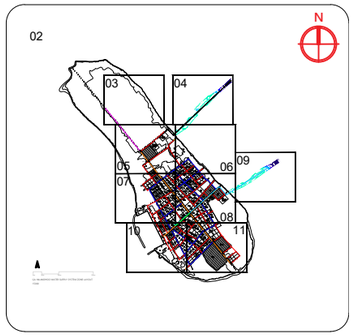

Legend

- Ø63 HDPE Water Main Distribution Pipe
- Ø75 HDPE Water Main Distribution Pipe
- Ø90 HDPE Water Main Distribution Pipe
- Ø110 HDPE Water Main Distribution Pipe
- Ø160 HDPE Water Main Distribution Pipe
- Ø110 HDPE Brine Outfall Pipe
- Gate Valves
- Washout Valves
- Junction

Notes:

1. All levels are shown in meters.
2. All levels are shown from mean sea level.
3. This drawing to be read in conjunction with all other relevant drawing and specifications.
4. All pressure pipes and fittings shall be installed using electro-fusion and butt-fusion technologies.
5. All pressure pipes shall be laid in between 0.7m - 1.0m below natural ground level to achieve best flat alignment based on topographic survey.
6. All the service connections to the mains shall be made using electro-fusion saddle and coupler.
7. Minimum size of the main water supply network shall be OD 63mm PE100, PN10, SDR17 HDPE pipe.
8. Minimum size of the house service line shall be OD 25mm PE100, PN16, SDR11 HDPE pipe.
9. Minimum size of commercial and other institutional connection service line shall be 50mm, PE100, PN16, SDR11 HDPE pipe.

MAINS DISTRIBUTION

DIAMETER (mm)	LENGTH HDPE (m)	TYPE OF PIPE
63	4823	HDPE (PE100,PN10,SDR17)
75	2361	
90	323	
110	1159	
160	123	
Total	8789	
Gate Valves	- 25 nos	
Washout Valves	- 02 nos	

OUTFALL

DIAMETER (mm)	LENGTH HDPE (m)	TYPE OF PIPE
110	711	HDPE (PE100,PN10,SDR11)

PSM BENCHMARKS

PERMANENT BENCH MARK 1
327149.526E, 70041.431N
1.031m From MSL

PERMANENT BENCH MARK 2
327175.055E, 70057.839N
1.306m From MSL

REV. NO.	Date	Revision Description	Drawn	Chkd	Appd.
R00	JUNE 2020	STAGE -1	PD	SBC	SD

Title:

Consultancy Services for Survey, Design and EIA works of Water Supply and Sewerage Facilities in 5 islands, Maldives - Package 6

Sub Title:

Water Supply System in Ga.Nilandhoo

Client:

Ministry of National Planning, Housing and Infrastructure, Republic of Maldives

EPOCH ASSOCIATES
T: +960 333 3528
E: info@epoch.associates
W: wwww.epoch.associates
A: G. Rosary West,
Husnuheenaa Magu, Male', Maldives

FEEDBACK INFRA
Making Infrastructure Happen

Drawn: F.I.A.	Checked: M.S.S.		
Designed: F.I.A.	Approved: I.W.		
Date: Aug 2020	SCALE (A3): 1:1000		
Project No: EP-WS/2019/06			
Rev: R-01	Page: 08		

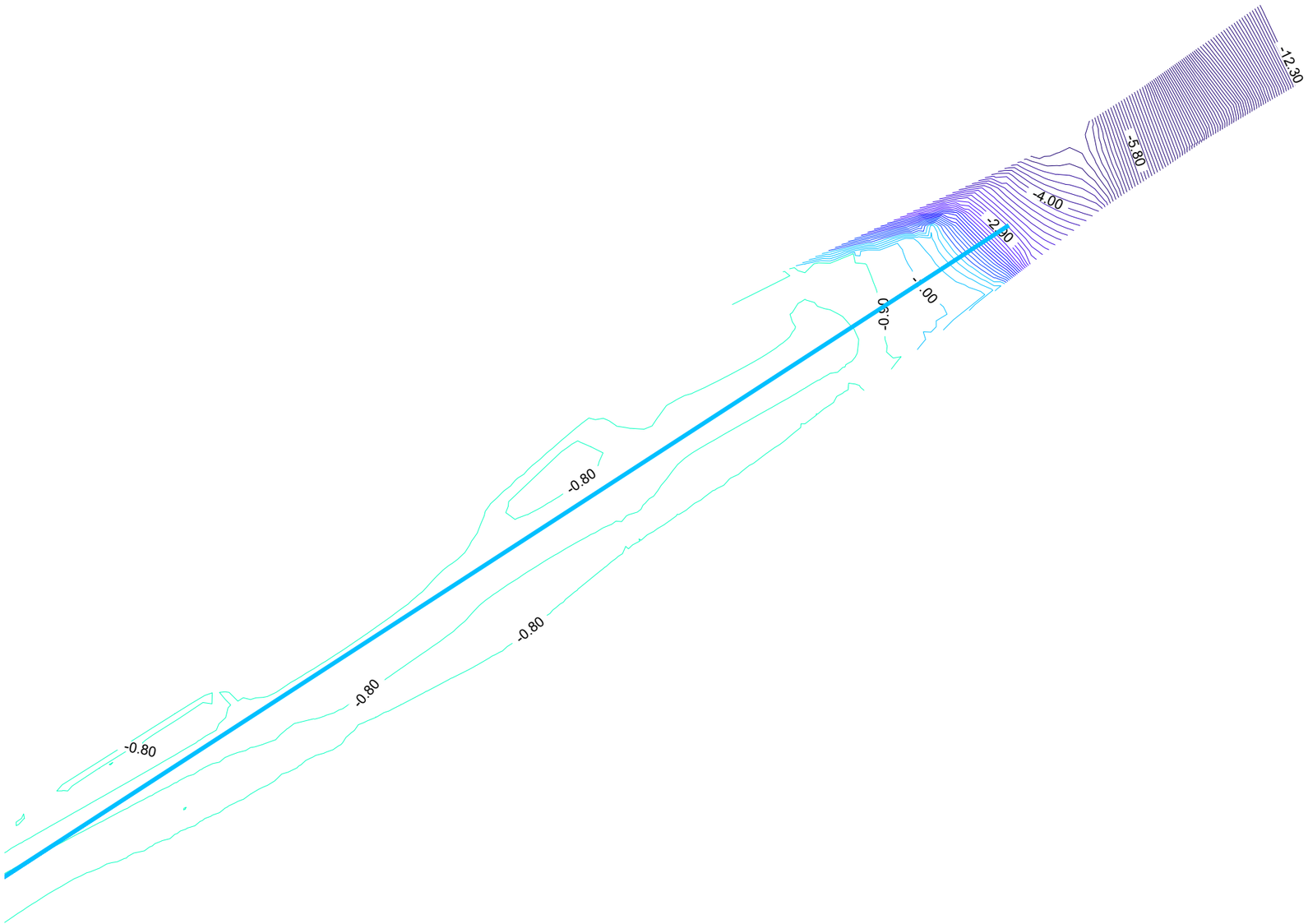

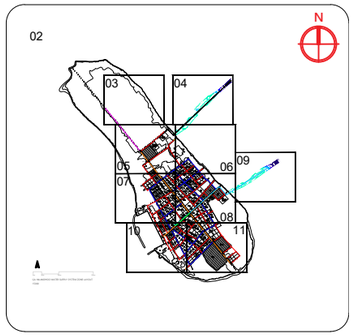

Legend

- Ø63 HDPE Water Main Distribution Pipe
- Ø90 HDPE Water Main Distribution Pipe
- Ø160 HDPE Water Main Distribution Pipe
- Ø75 HDPE Water Main Distribution Pipe
- Ø110 HDPE Water Main Distribution Pipe
- Ø110 HDPE Brine Outfall Pipe
- Gate Valves
- Washout Valves
- Junction

Notes:

1. All levels are shown in meters.
2. All levels are shown from mean sea level.
3. This drawing to be read in conjunction with all other relevant drawing and specifications.
4. All pressure pipes and fittings shall be installed using electro-fusion and butt-fusion technologies.
5. All pressure pipes shall be laid in between 0.7m - 1.0m below natural ground level to achieve best flat alignment based on topographic survey.
6. All the service connections to the mains shall be made using electro-fusion saddle and coupler.
7. Minimum size of the main water supply network shall be OD 63mm PE100, PN10, SDR17 HDPE pipe.
8. Minimum size of the house service line shall be OD 25mm PE100, PN16, SDR11 HDPE pipe.
9. Minimum size of commercial and other institutional connection service line shall be 50mm, PE100, PN16, SDR11 HDPE pipe.

MAINS DISTRIBUTION

DIAMETER (mm)	LENGTH HDPE (m)	TYPE OF PIPE
63	4823	HDPE (PE100,PN10,SDR17)
75	2361	
90	323	
110	1159	
160	123	
Total	8789	

Gate Valves	- 25 nos
Washout Valves	- 02 nos

OUTFALL

DIAMETER (mm)	LENGTH HDPE (m)	TYPE OF PIPE
110	711	HDPE (PE100,PN10,SDR11)

PSM BENCHMARKS

PERMANENT BENCH MARK 1
327149.526E, 70041.431N
1.031m From MSL

PERMANENT BENCH MARK 2
327175.055E, 70057.839N
1.306m From MSL

REV. NO.	Date	Revision Description	Drawn	Chkd	Appd.
R00	JUNE 2020	STAGE -1	PD	SBC	SD

Title:

Consultancy Services for Survey, Design and EIA works of Water Supply and Sewerage Facilities in 5 islands, Maldives - Package 6

Sub Title:

Water Supply System in Ga.Nilandhoo

Client:

Ministry of National Planning, Housing and Infrastructure, Republic of Maldives

EPOCH ASSOCIATES

T: +960 333 3528
E: info@epoch.associates
W: wwww.epoch.associates
A: G. Rosary West,
Husnuheenaa Magu, Male', Maldives

FEEDBACK INFRA

Drawn: F.I.A.	Checked: M.S.S.
Designed: F.I.A.	Approved: I.W.
Date: Aug 2020	SCALE (A3): 1:1000

Project No: EP-WS/2019/06

Rev: **R-01**

Page: **09**

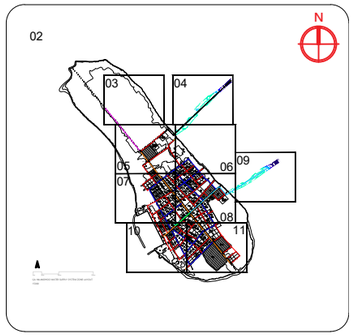

Legend

- Ø63 HDPE Water Main Distribution Pipe
- Ø90 HDPE Water Main Distribution Pipe
- Ø160 HDPE Water Main Distribution Pipe
- Gate Valves
- Junction
- Ø75 HDPE Water Main Distribution Pipe
- Ø110 HDPE Water Main Distribution Pipe
- Ø110 HDPE Brine Outfall Pipe
- Washout Valves

Notes:

1. All levels are shown in meters.
2. All levels are shown from mean sea level.
3. This drawing to be read in conjunction with all other relevant drawing and specifications.
4. All pressure pipes and fittings shall be installed using electro-fusion and butt-fusion technologies.
5. All pressure pipes shall be laid in between 0.7m - 1.0m below natural ground level to achieve best flat alignment based on topographic survey.
6. All the service connections to the mains shall be made using electro-fusion saddle and coupler.
7. Minimum size of the main water supply network shall be OD 63mm PE100, PN10, SDR17 HDPE pipe.
8. Minimum size of the house service line shall be OD 25mm PE100, PN16, SDR11 HDPE pipe.
9. Minimum size of commercial and other institutional connection service line shall be 50mm, PE100, PN16, SDR11 HDPE pipe.

MAINS DISTRIBUTION

DIAMETER (mm)	LENGTH HDPE (m)	TYPE OF PIPE
63	4823	HDPE (PE100,PN10,SDR17)
75	2361	
90	323	
110	1159	
160	123	
Total	8789	
Gate Valves	- 25 nos	
Washout Valves	- 02 nos	

OUTFALL

DIAMETER (mm)	LENGTH HDPE (m)	TYPE OF PIPE
110	711	HDPE (PE100,PN10,SDR11)

PSM BENCHMARKS

PERMANENT BENCH MARK 1
327149.526E, 70041.431N
1.031m From MSL

PERMANENT BENCH MARK 2
327175.055E, 70057.839N
1.306m From MSL

REV. NO.	Date	Revision Description	Drawn	Chkd	Appd.
R00	JUNE 2020	STAGE -1	PD	SBC	SD

Title:

Consultancy Services for Survey, Design and EIA works of Water Supply and Sewerage Facilities in 5 islands, Maldives - Package 6

Sub Title:

Water Supply System in Ga.Nilandhoo

Client:

Ministry of National Planning, Housing and Infrastructure, Republic of Maldives

EPOCH ASSOCIATES
T: +960 333 3528
E: info@epoch.associates
W: www.epoch.associates
A: G. Rosary West,
Husnuheenaa Magu, Male', Maldives

FEEDBACK INFRA
Making Infrastructure Happen

Drawn: F.I.A.	Checked: M.S.S.
Designed: F.I.A.	Approved: I.W.
Date: Aug 2020	SCALE (A3): 1:1000

Project No: EP-WS/2019/06

Rev: R-01

Page: 10

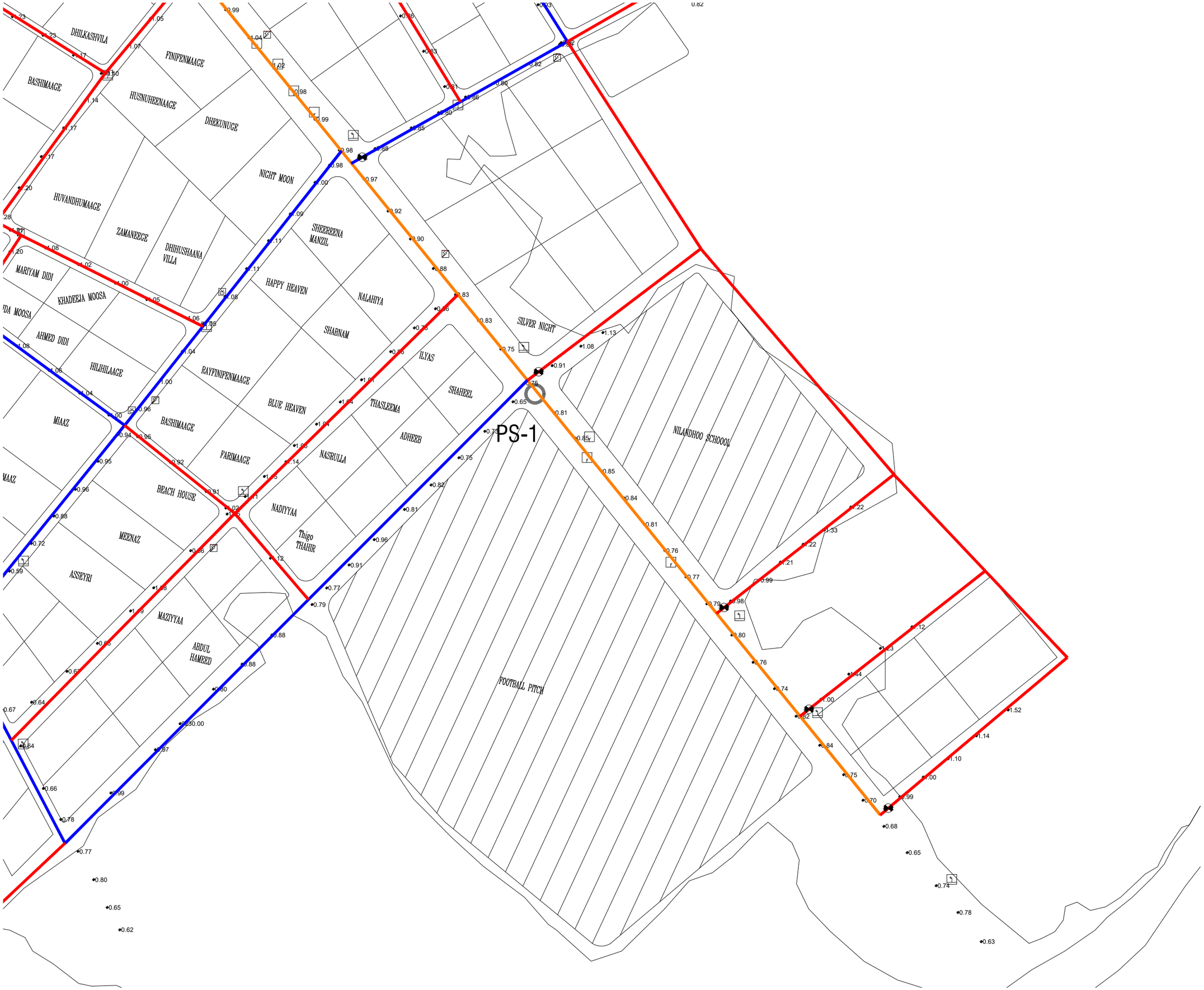

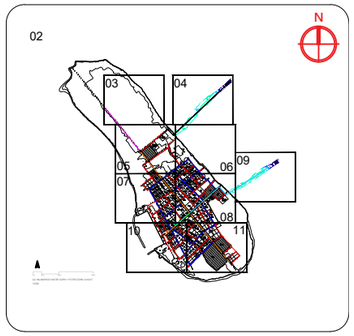

Legend

- Ø63 HDPE Water Main Distribution Pipe
- Ø75 HDPE Water Main Distribution Pipe
- Ø90 HDPE Water Main Distribution Pipe
- Ø110 HDPE Water Main Distribution Pipe
- Ø160 HDPE Water Main Distribution Pipe
- Ø110 HDPE Brine Outfall Pipe
- Gate Valves
- Washout Valves
- Junction

Notes:

1. All levels are shown in meters.
2. All levels are shown from mean sea level.
3. This drawing to be read in conjunction with all other relevant drawing and specifications.
4. All pressure pipes and fittings shall be installed using electro-fusion and butt-fusion technologies.
5. All pressure pipes shall be laid in between 0.7m - 1.0m below natural ground level to achieve best flat alignment based on topographic survey.
6. All the service connections to the mains shall be made using electro-fusion saddle and coupler.
7. Minimum size of the main water supply network shall be OD 63mm PE100, PN10, SDR17 HDPE pipe.
8. Minimum size of the house service line shall be OD 25mm PE100, PN16, SDR11 HDPE pipe.
9. Minimum size of commercial and other institutional connection service line shall be 50mm, PE100, PN16, SDR11 HDPE pipe.

MAINS DISTRIBUTION

DIAMETER (mm)	LENGTH HDPE (m)	TYPE OF PIPE
63	4823	HDPE (PE100,PN10,SDR17)
75	2361	
90	323	
110	1159	
160	123	
Total	8789	
Gate Valves	- 25 nos	
Washout Valves	- 02 nos	

OUTFALL

DIAMETER (mm)	LENGTH HDPE (m)	TYPE OF PIPE
110	711	HDPE (PE100,PN10,SDR11)

PSM BENCHMARKS

PERMANENT BENCH MARK 1
327749.526E, 700414.31N
1.031m From MSL

PERMANENT BENCH MARK 2
327175.055E, 700557.839N
1.306m From MSL

REV. NO.	Date	Revision Description	Drawn	Chkd	Appd.
R00	JUNE 2020	STAGE -1	PD	SBC	SD

Title:

Consultancy Services for Survey, Design and EIA works of Water Supply and Sewerage Facilities in 5 islands, Maldives - Package 6

Sub Title:

Water Supply System in Ga.Nilandhoo

Client:

Ministry of National Planning, Housing and Infrastructure, Republic of Maldives

EPOCH ASSOCIATES
T: +960 333 3528
E: info@epoch.associates
W: wwww.epoch.associates
A: G. Rosary West,
Husnuheenaa Magu, Male', Maldives

FEEDBACK INFRA

Drawn: F.I.A.	Checked: M.S.S.
Designed: F.I.A.	Approved: I.W.
Date: Aug 2020	SCALE (A3): 1:1000
Project No: EP-WS/2019/06	
Rev: R-01	Page: 11

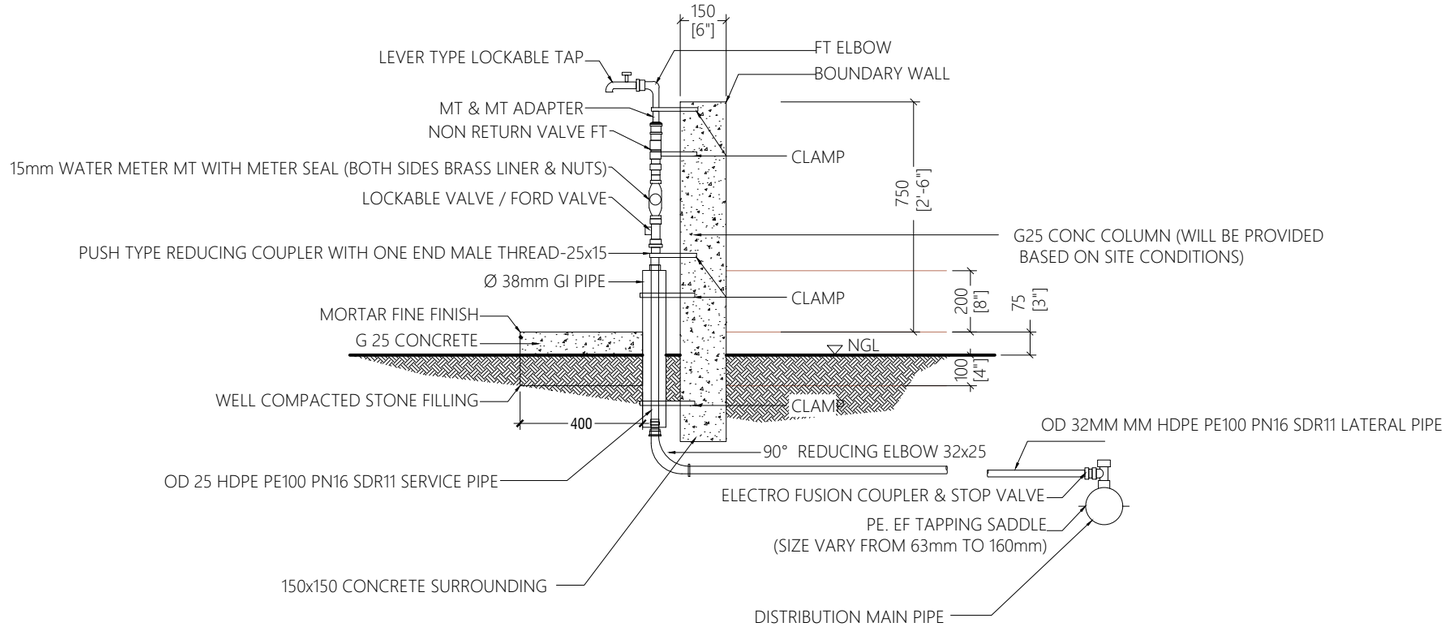

WATER SUPPLY HOUSE CONNECTION DETAILS

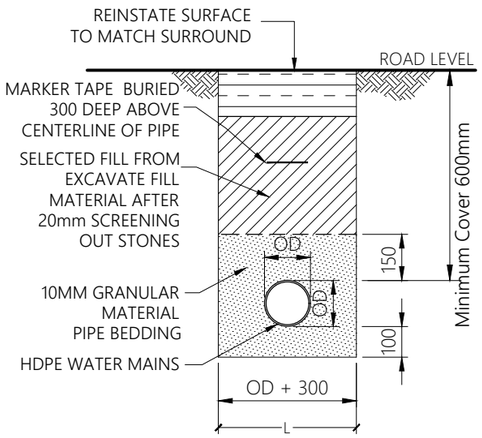

TRENCH & BEDDING DETAILS

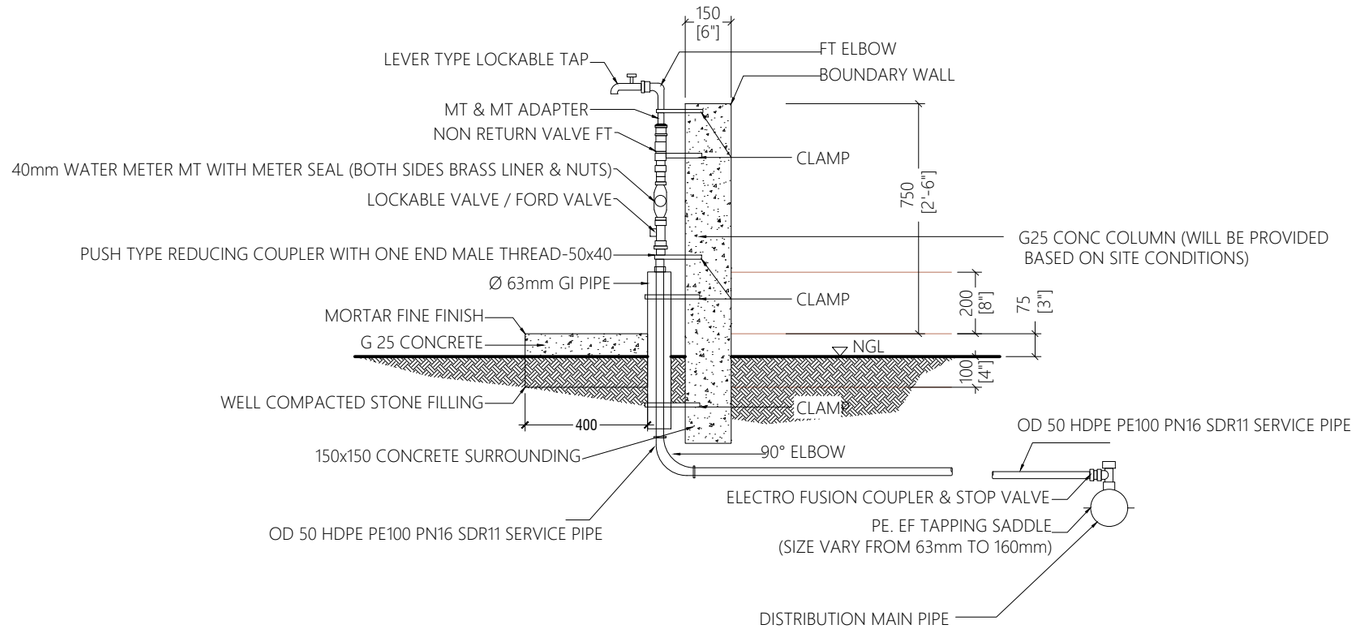

WATER SUPPLY COMMERCIAL/INSTITUTIONAL CONNECTION DETAILS

WATER SUPPLY HOUSE AND COMMERCIAL/INSTITUTIONAL CONNECTIONS

1:20

N

Legend

REV. NO.	Date	Revision Description	Drawn	Chkd	Appd.
R00	JUNE 2020	STAGE -1	PD	SBC	SD

Title:

Consultancy Services for Survey, Design and EIA works of Water Supply and Sewerage Facilities in 5 islands, Maldives - Package 6

Sub Title:

Water Supply System in Ga. Nilandhoo

Client:

Ministry of National Planning, Housing and Infrastructure, Republic of Maldives

EPOCH ASSOCIATES
T: +960 333 3528
E: info@epoch.associates
W: wwww.epoch.associates
A: G. Rosary West,
Husnuheenaa Magu, Male', Maldives

FEEDBACK INFRA
Making Infrastructure Happen

Drawn: F.I.A.	Checked: M.S.S.
Designed: F.I.A.	Approved: I.W.
Date: Aug 2020	SCALE (A3): 1:20
Project No: EP- WS/2019/06	
Rev: R-01	Page: W-01

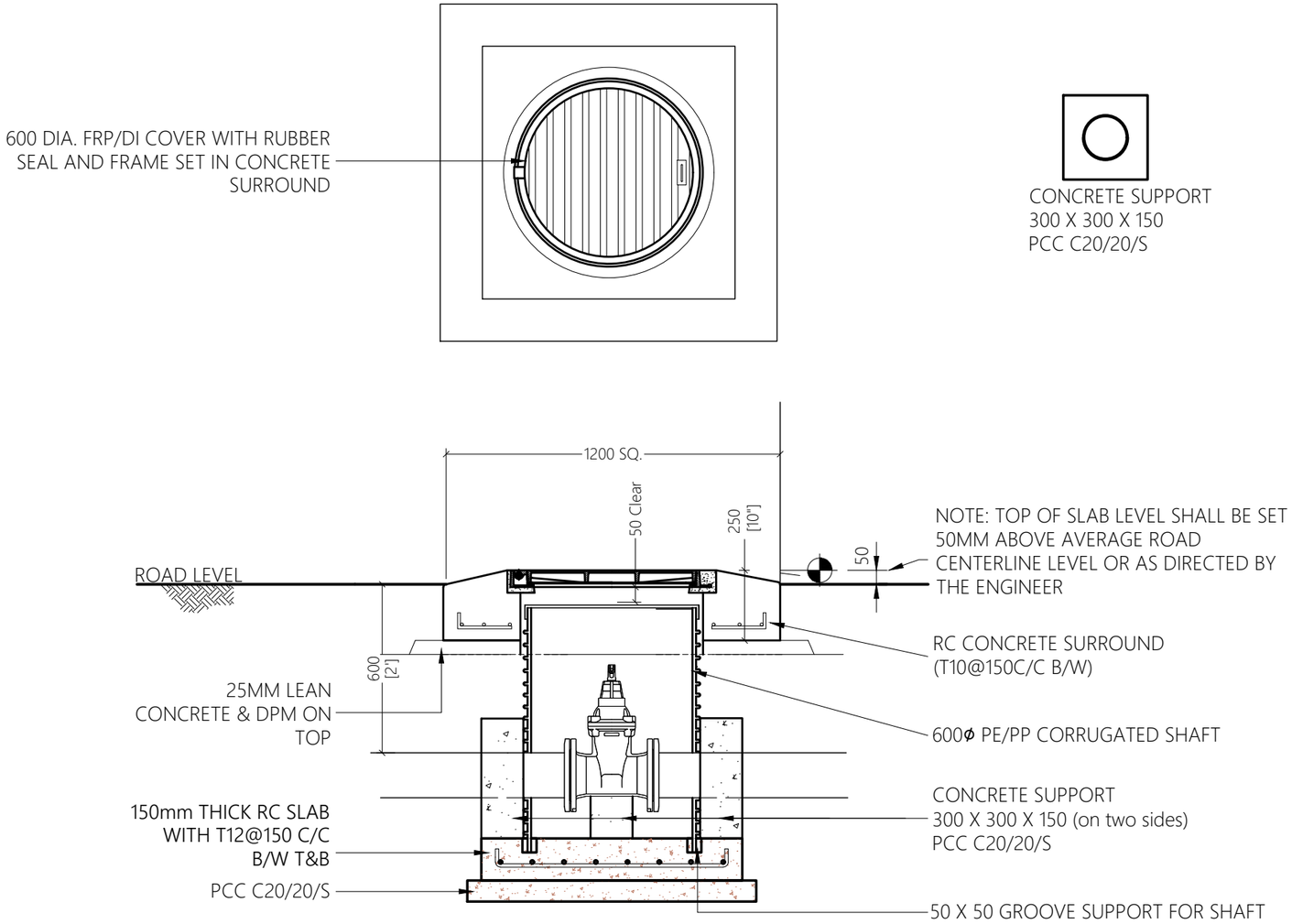

SECTION - VALVE CHAMBER

VALVE CHAMBER DETAILS

1:20

N

Legend

REV. NO.	Date	Revision Description	Drawn	Chkd	Appd.
R00	JUNE 2020	STAGE -1	PD	SBC	SD

Title:

Consultancy Services for Survey, Design and EIA works of Water Supply and Sewerage Facilities in 5 islands, Maldives - Package 6

Sub Title:

Water Supply System in Ga. Nilandhoo

Client:

Ministry of National Planning, Housing and Infrastructure, Republic of Maldives

EPOCH ASSOCIATES PVT. LTD.
T: +960 333 3528
E: info@epoch.associates
W: wwww.epoch.associates
A: G. Rosary West,
Husnuheenaa Magu, Male', Maldives

FEEDBACK INFRA

Drawn: F.I.A.	Checked: M.S.S.
Designed: F.I.A.	Approved: I.W.
Date: Aug 2020	SCALE (A3): 1:20
Project No: EP- WS/2019/06	
Rev: **R-01**	Page: **W-02**

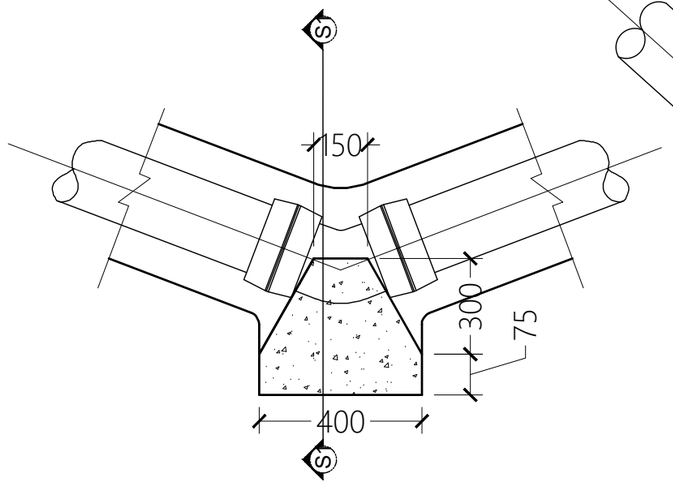

HORIZONTAL 45° BEND
NTS

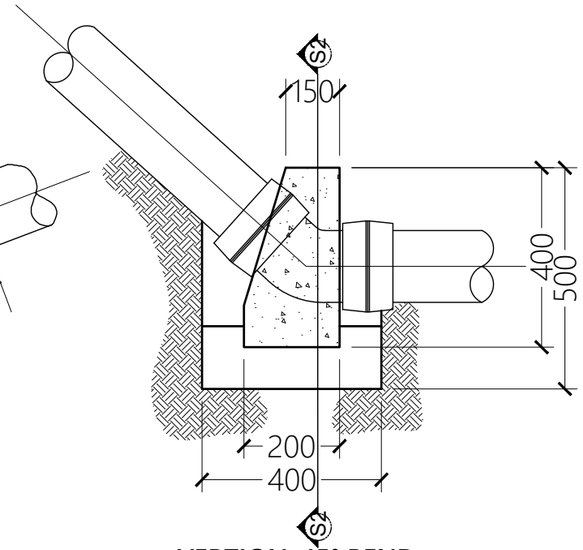

VERTICAL 45° BEND
NTS

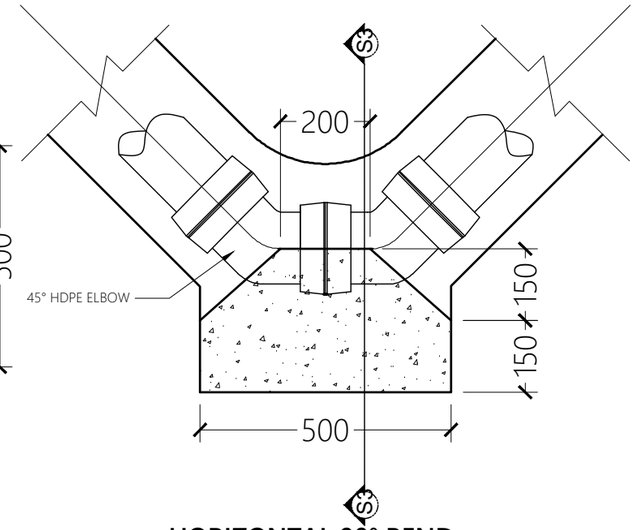

HORIZONTAL 90° BEND
NTS

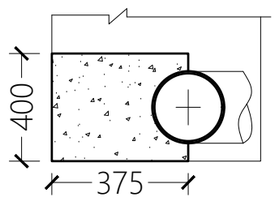

SECTION S1-S1
NTS

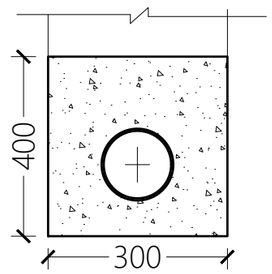

SECTION S2-S2
NTS

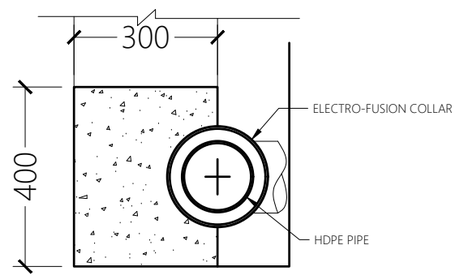

SECTION S3-S3
NTS

THRUST BLOCK DETAILS
NTS

N

Legend

REV. NO.	Date	Revision Description	Drawn	Chkd	Appd.
R00	JUNE 2020	STAGE -1	PD	SBC	SD

Title:
Consultancy Services for Survey, Design and EIA works of Water Supply and Sewerage Facilities in 5 islands, Maldives - Package 6

Sub Title:
Water Supply System in Ga. Nilandhoo

Client:
Ministry of National Planning, Housing and Infrastructure, Republic of Maldives

EPOCH ASSOCIATES
T: +960 333 3528
E: info@epoch.associates
W: www.epoch.associates
A: G. Rosary West,
Husnuheenaa Magu, Male', Maldives

FEEDBACK INFRA
Working Infrastructure Happier

Drawn: F.I.A.	Checked: M.S.S.
Designed: F.I.A.	Approved: I.W.
Date: Aug 2020	SCALE (A3): 1:20
Project No: EP- WS/2019/06	
Rev: R-01	Page: W-03

PUMP DETAILS

Borehole Pump : 2 Nos
- Flow (Q) = 16.66 m3/hr
- Head (H) = 50 m

High Pressure Pump : 2 Nos
- Flow (Q) = 8.33 m3/hr
- Pressure Range = 45-85 bar

Transfer Pump : 2 Nos
- Flow (Q) = 7.50 m3/hr
- Head (H) = 10 m

Distribution Pump Set : 2 Nos
- Flow (Q) = 10.8 m3/hr
- Head (H) = 35 m

Brine Pump : 2 Nos
- Flow (Q) = 11.66 m3/hr
- Head (H) = 23 m

Gate Valve

Check Valve

Totalizer

Pump

Closed Gate Valve

SP Sampling Point

Butterfly Valve

Ball Valve

N

INTERNAL PIPE LAYOUT

1:200

N

Legend

- Ø90 HDPE (PE100, PN10, SDR17)
- Ø63 HDPE (PE100, PN10, SDR17)
- Ø110 HDPE (PE100, PN10, SDR17)
- Ø110 HDPE (OUTFALL PE100, PN16, SDR11)

Notes:

- All Pump sizes are based on 15 year demands.
- Rainwater collection Pump sizing is done considering Maximum Rainfall intensity of 50mm/hr.
- UF feed pump will be subject to Approved UF Plant suppliers approval.
- Both Feed Pump and High pressure pump capacity will need to be approved by the approved RO plant Supplier. The working pressure range will be established based on the approved suppliers requirements.
- Distribution Pump set will have Variable Frequency Drive.
- All pump control float switches and automated valves will be provided.
- The existing product and rainwater tanks will be converted into rainwater holding tanks, connected together.
- Product water from existing UF plant to be diverted to the degassifier.

REV. NO.	Date	Revision Description	Drawn	Chkd	Appd.
R00	JUNE 2020	STAGE -1	PD	SBC	SD

Title:

Consultancy Services for Survey, Design and EIA works of Water Supply and Sewerage Facilities in 5 islands, Maldives - Package 6

Sub Title:

Water Supply System in Ga. Nilandhoo

Client:

Ministry of National Planning, Housing and Infrastructure, Republic of Maldives

EPOCH ASSOCIATES
T: +960 333 3528
E: info@epoch.associates
W: www.epoch.associates
A: G. Rosary West,
Husnuheenaa Magu, Male', Maldives

FEEDBACK INFRA
Wastewater Infrastructure Happiness

Drawn: F.I.A.	Checked: M.S.S.
Designed: F.I.A.	Approved: I.W.
Date: Aug 2020	SCALE (A3): 1:20

Project No: EP- WS/2019/06

Rev: **R-01**

Page: **W-04**

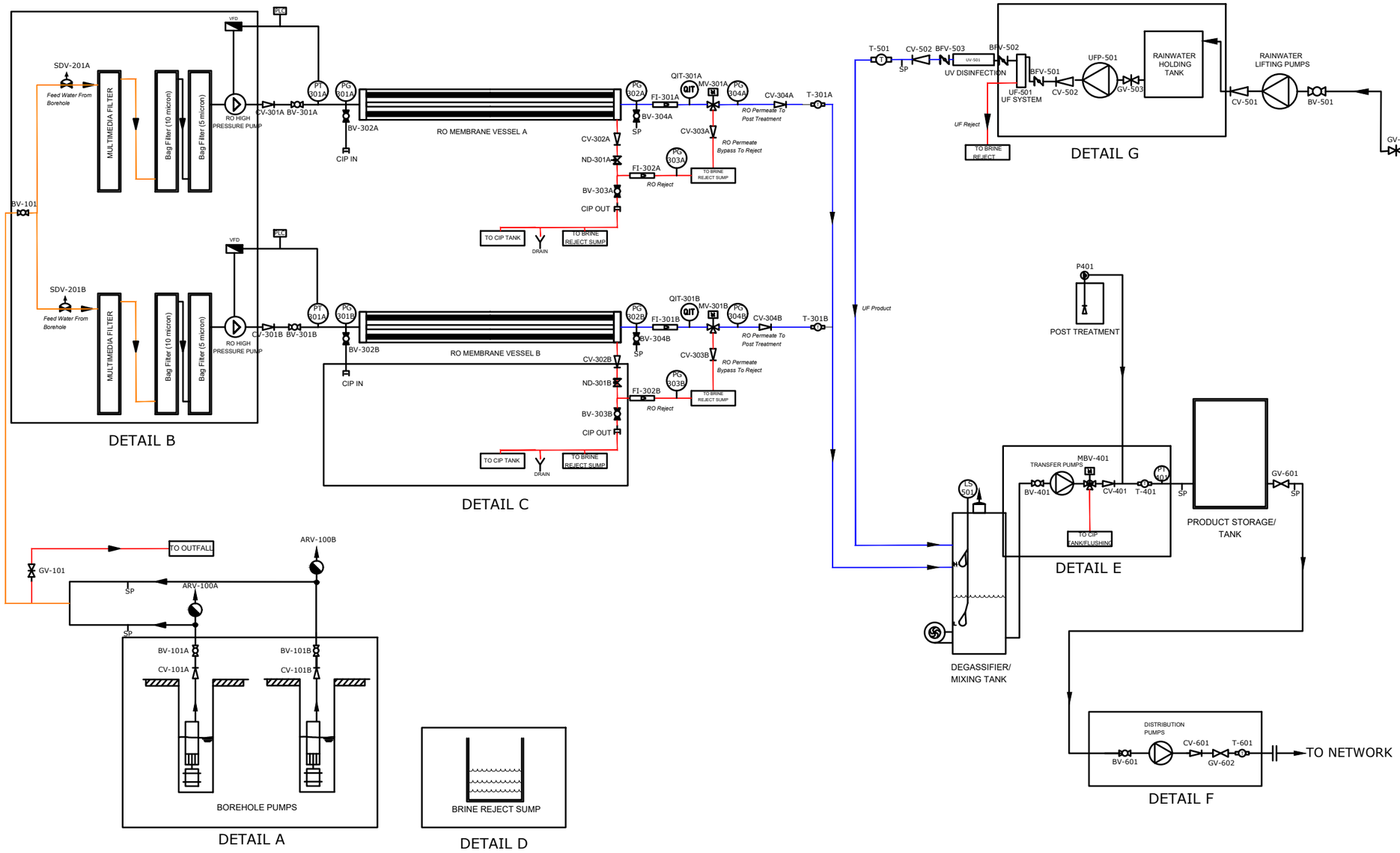

LEGEND

ACTUATION	VALVES				FEATURES	CONDITION	ABBREVIATIONS
MANUALLY OPERATED	BUTTERFLY		MOTORIZED BALL		FLANGED CONNECTION	VALVE NORMALLY OPEN	LS - LEVEL SENSOR
PNEUMATIC DIAPHRAGM - SINGLE ACTING	BALL		TORTALIZER		TRAP	VALVE NORMALLY CLOSED	FT - FLOW TRANSMITTER
PNEUMATIC DIAPHRAGM - DOUBLE ACTING	DIAPHRAGM		GATE		DISCHARGE TO ATMOSPHERE		PI - PRESSURE INDICATOR
PNEUMATIC PISTON	3-WAY		CHECK VALVE		SAMPLING POINT		SP - SAMPLING POINT
	SLUICE		MOTORIZED 3 WAY		FLOW INDICATOR		AR - AIR RELEASE
							P - PUMP
							PG - PRESSURE GAUGE
							PS - PRESSURE SENSOR
							CP - CONNECTION POINT
							LT - LEVEL TRANSMITTER
							QIT - CONDUCTIVITY INDICATOR
							PLC - PROGRAMMABLE LOGIC CONTROLLER

IWRM PLANT P&I OVERVIEW

NTS

N

Legend

FEED LINE

REJECT LINE

PRODUCT LINE

Note:

- CPVC pipe with PN10 rating to be used for the internal pipeline of the plant except for high pressure area (HPP to MV).
- From HPP to MV SS316 piping to be used.
- CPVC pipe with PN16 rating to be used for pipe fittings.
- CPVC pipe with SDR ratio 17 ratio to be used for network.
- HPP used to have a self cooled radial piston.
- CF filters to have a plastic housing with SS304 bolt fittings at connections.
- MM filters to be sized with 32" height by 7" diameter housing.
- Borehole Pumps set to include Variable Frequency Drive (VFD)

REV. NO.	Date	Revision Description	Drawn	Chkd	Appd.
R00	JUNE 2020	STAGE -1	PD	SBC	SD

Title:

Consultancy Services for Survey, Design and EIA works of Water Supply and Sewerage Facilities in 5 islands, Maldives - Package 6

Sub Title:

Water Supply System in Ga. Nilandhoo

Client:

Ministry of National Planning, Housing and Infrastructure, Republic of Maldives

EPOCH ASSOCIATES
T: +960 333 3528
E: info@epoch.associates
W: wwww.epoch.associates
A: G. Rosary West, Husnuheenaa Magu, Male', Maldives

FEEDBACK INFRA
Working Infrastructure Happiness

Drawn: F.I.A.	Checked: M.S.S.
Designed: F.I.A.	Approved: I.W.
Date: Aug 2020	SCALE (A3): 1:20
Project No: EP- WS/2019/06	
Rev: R-01	Page: W-05

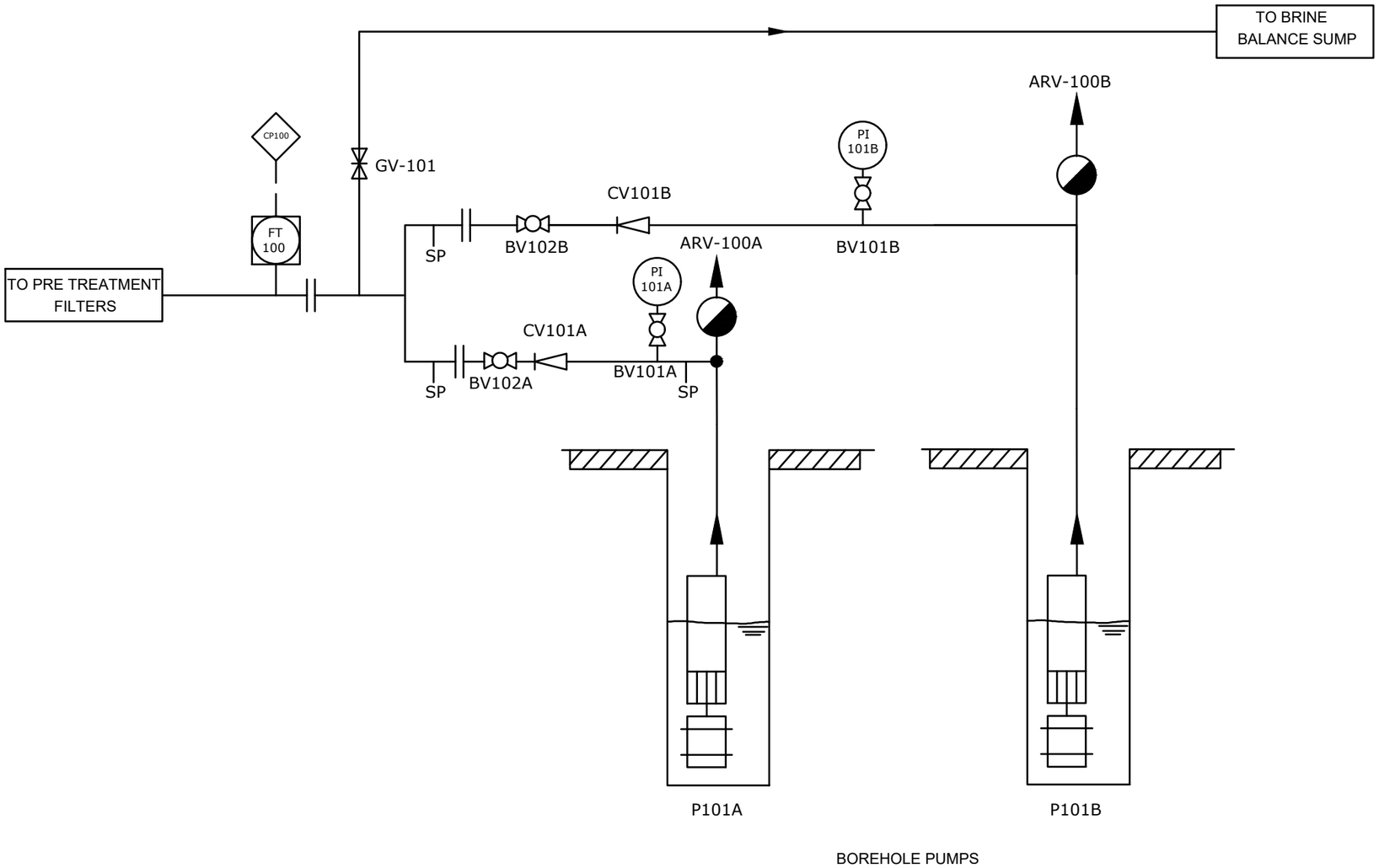

DETAIL A

LEGEND				
ACTUATION	VALVES	FEATURES	CONDITION	ABBREVIATIONS
MANUALLY OPERATED	BUTTERFLY	FLANGED CONNECTION	VALVE NORMALLY OPEN	LS - LEVEL SENSOR
PNEUMATIC DIAPHRAGM - SINGLE ACTING	BALL	TRAP	VALVE NORMALLY CLOSED	FT - FLOW TRANSMITTER
PNEUMATIC DIAPHRAGM - DOUBLE ACTING	DIAPHRAGM	DISCHARGE TO ATMOSPHERE		PI - PRESSURE INDICATOR
PNEUMATIC PISTON	3-WAY	SAMPLING POINT		SP - SAMPLING POINT
	SLUICE	FLOW INDICATOR		AR - AIR RELEASE
	MOTORIZED BALL			P - PUMP
	TORTALIZER			PG - PRESSURE GAUGE
	GATE			PS - PRESSURE SENSOR
	CHECK VALVE			CP - CONNECTION POINT
	MOTORIZED 3 WAY			LT - LEVEL TRANSMITTER
				QIT - CONDUCTIVITY INDICATOR
				PLC - PROGRAMMABLE LOGIC CONTROLLER

IWRM PLANT P&I DETAIL A

NTS

N

Legend

Note:
- Borehole pumps to be controlled by Variable Frequency Drive (VFD)

REV. NO.	Date	Revision Description	Drawn	Chkd	Appd.
R00	JUNE 2020	STAGE -1	PD	SBC	SD

Title:
Consultancy Services for Survey, Design and EIA works of Water Supply and Sewerage Facilities in 5 islands, Maldives - Package 6

Sub Title:
Water Supply System in Ga. Nilandhoo

Client:
Ministry of National Planning, Housing and Infrastructure, Republic of Maldives

EPOCH ASSOCIATES
T: +960 333 3528
E: info@epoch.associates
W: www.epoch.associates
A: G. Rosary West, Husnuheenaa Magu, Male', Maldives

FEEDBACK INFRA

Drawn:	F.I.A.	Checked:	M.S.S.
Designed:	F.I.A.	Approved:	I.W.
Date:	Aug 2020	SCALE (A3):	1:20

Project No: EP- WS/2019/06

Rev: **R-01**

Page: **W-06**

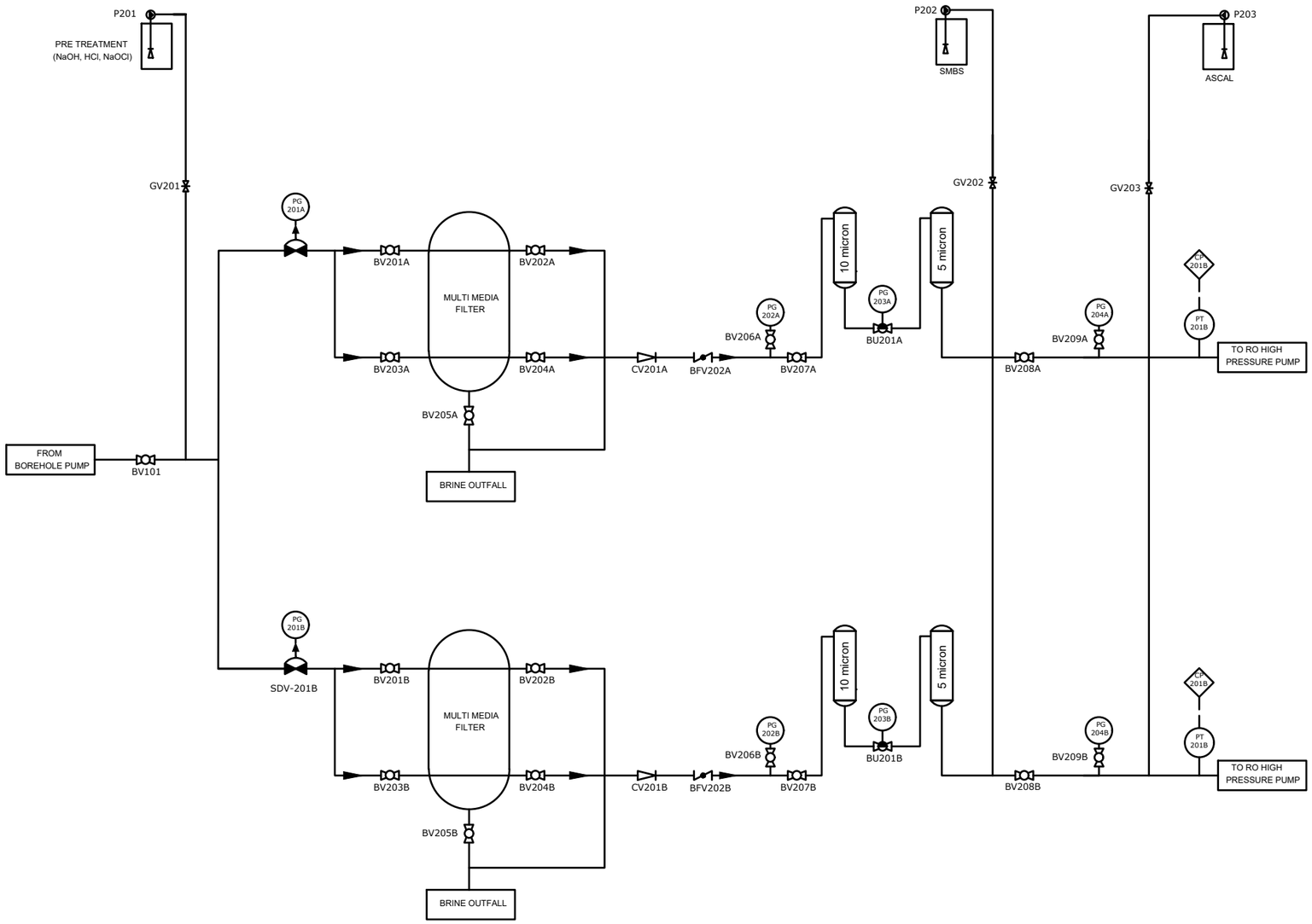

DETAIL B

LEGEND				
ACTUATION	VALVES	FEATURES	CONDITION	ABBREVIATIONS
MANUALLY OPERATED	BUTTERFLY	FLANGED CONNECTION	VALVE NORMALLY OPEN	LS - LEVEL SENSOR
PNEUMATIC DIAPHRAGM - SINGLE ACTING	BALL	TRAP	VALVE NORMALLY CLOSED	FT - FLOW TRANSMITTER
PNEUMATIC DIAPHRAGM - DOUBLE ACTING	DIAPHRAGM	DISCHARGE TO ATMOSPHERE		PI - PRESSURE INDICATOR
PNEUMATIC PISTON	3-WAY	SAMPLING POINT		SP - SAMPLING POINT
	SLUICE	FLOW INDICATOR		AR - AIR RELEASE
	MOTORIZED BALL			P - PUMP
	TORTALIZER			PG - PRESSURE GAUGE
	GATE			PS - PRESSURE SENSOR
	CHECK VALVE			CP - CONNECTION POINT
	MOTORIZED 3 WAY			LT - LEVEL TRANSMITTER
				QIT - CONDUCTIVITY INDICATOR
				PLC - PROGRAMMABLE LOGIC CONTROLLER

IWRM PLANT P&I DETAIL B

NTS

Legend

Note:
- SMBS Pre dosing chemical to be used only if Chlorine based dosing chemical is added prior to filtration.
- Union valve to be connected in between the two cartridge filters.
- MM filters to be controlled manually.

REV. NO.	Date	Revision Description	Drawn	Chkd	Appd.
R00	JUNE 2020	STAGE -1	PD	SBC	SD

Title:
Consultancy Services for Survey, Design and EIA works of Water Supply and Sewerage Facilities in 5 islands, Maldives - Package 6

Sub Title:
Water Supply System in Ga. Nilandhoo

Client:
Ministry of National Planning, Housing and Infrastructure, Republic of Maldives

EPOCH ASSOCIATES
T: +960 333 3528
E: info@epoch.associates
W: www.epoch.associates
A: G. Rosary West, Husnuheenaa Magu, Male', Maldives

FEEDBACK INFRA

Drawn:	F.I.A.	Checked:	M.S.S.
Designed:	F.I.A.	Approved:	I.W.
Date:	Aug 2020	SCALE (A3):	1:20

Project No: EP- WS/2019/06

Rev: **R-01**

Page: **W-07**

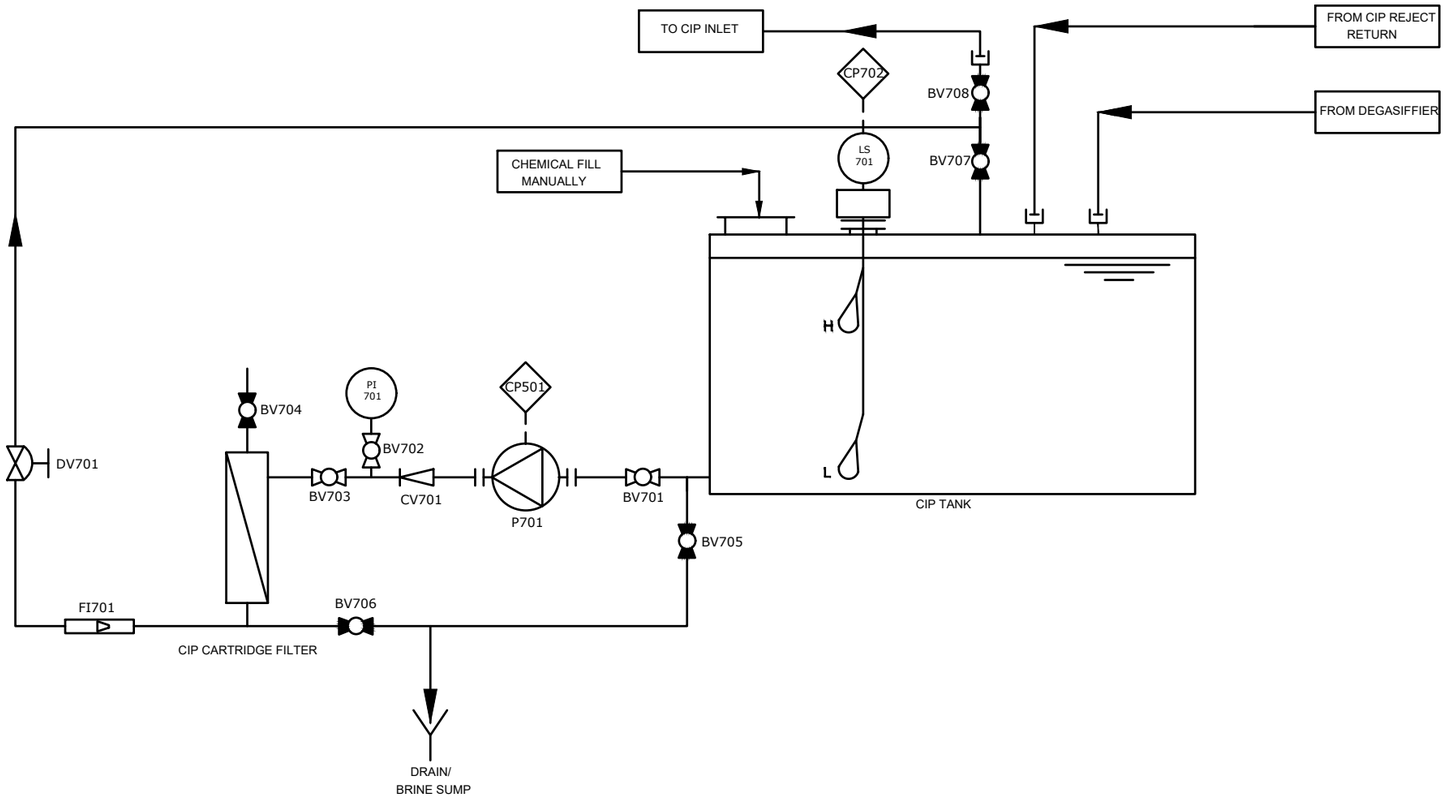

DETAIL C

LEGEND				
ACTUATION	VALVES	FEATURES	CONDITION	ABBREVIATIONS
MANUALLY OPERATED	BUTTERFLY	FLANGED CONNECTION	VALVE NORMALLY OPEN	LS - LEVEL SENSOR
PNEUMATIC DIAPHRAGM - SINGLE ACTING	BALL	TRAP	VALVE NORMALLY CLOSED	FT - FLOW TRANSMITTER
PNEUMATIC DIAPHRAGM - DOUBLE ACTING	DIAPHRAGM	DISCHARGE TO ATMOSPHERE		PI - PRESSURE INDICATOR
PNEUMATIC PISTON	3-WAY	SAMPLING POINT		SP - SAMPLING POINT
	SLUICE	FLOW INDICATOR		AR - AIR RELEASE
	MOTORIZED BALL			P - PUMP
	TORTALIZER			PG - PRESSURE GAUGE
	GATE			PS - PRESSURE SENSOR
	CHECK VALVE			CP - CONNECTION POINT
	MOTORIZED 3 WAY			LT - LEVEL TRANSMITTER
				QIT - CONDUCTIVITY INDICATOR
				PLC - PROGRAMMABLE LOGIC CONTROLLER

IWRM PLANT P&I DETAIL C

NTS

N

Legend

Note:
- Flexible hose VIC connection to be used for during CIP use and flushing.

REV. NO.	Date	Revision Description	Drawn	Chkd	Appd.
R00	JUNE 2020	STAGE -1	PD	SBC	SD

Title:
Consultancy Services for Survey, Design and EIA works of Water Supply and Sewerage Facilities in 5 islands, Maldives - Package 6

Sub Title:
Water Supply System in Ga. Nilandhoo

Client:
Ministry of National Planning, Housing and Infrastructure, Republic of Maldives

EPOCH ASSOCIATES (PVT) LTD
T: +960 333 3528
E: info@epoch.associates
W: www.epoch.associates
A: G. Rosary West, Husnuheenaa Magu, Male', Maldives

FEEDBACK INFRA

Drawn: F.I.A.	Checked: M.S.S.
Designed: F.I.A.	Approved: I.W.
Date: Aug 2020	SCALE (A3): 1:20

Project No: EP- WS/2019/06

Rev: **R-01**

Page: **W-08**

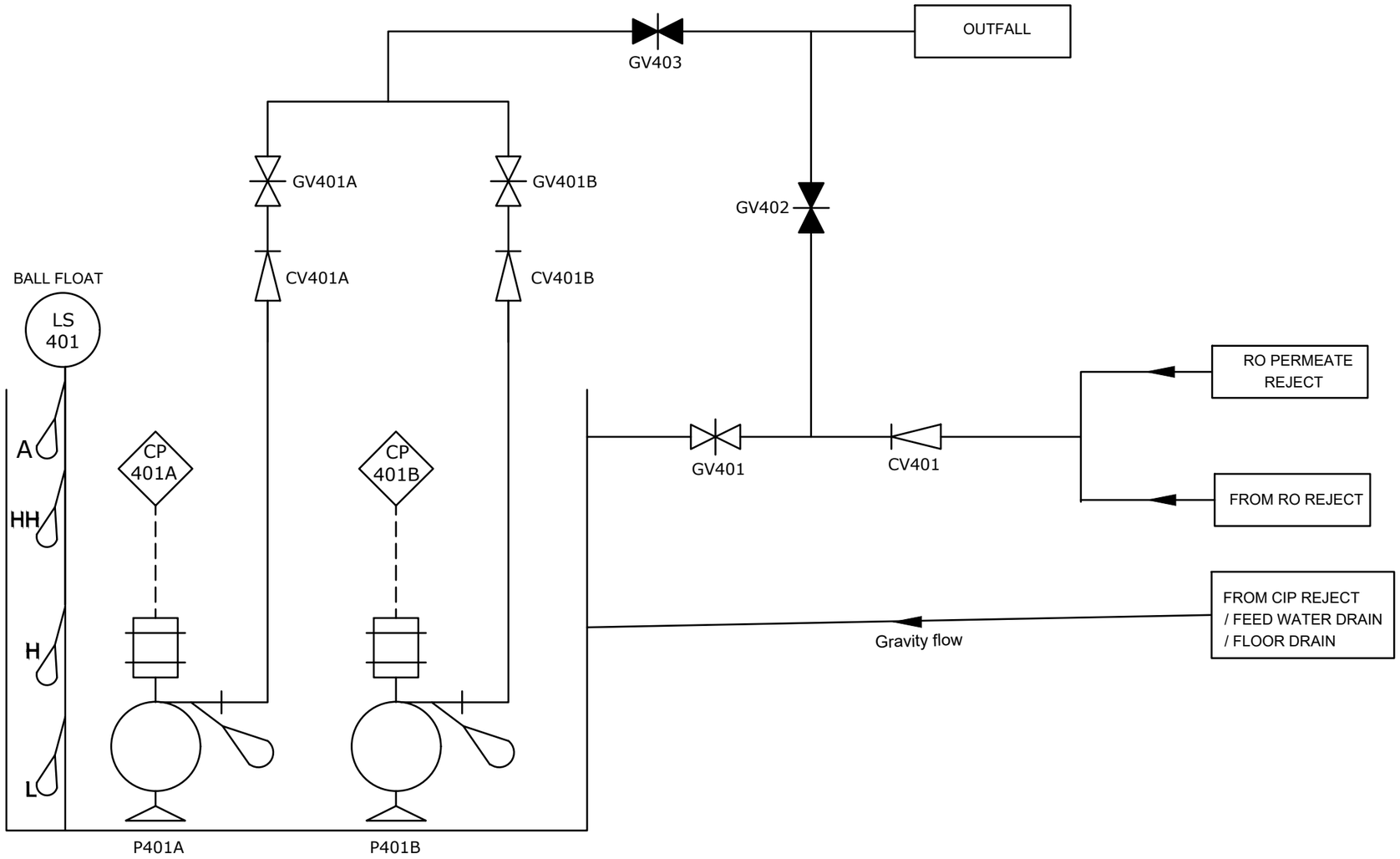

BRINE BALANCE SUMPS

DETAIL D

LEGEND									
ACTUATION		VALVES				FEATURES		CONDITION		ABBREVIATIONS
	MANUALLY OPERATED		BUTTERFLY		MOTORIZED BALL		FLANGED CONNECTION		VALVE NORMALLY OPEN	LS - LEVEL SENSOR
	PNEUMATIC DIAPHRAGM - SINGLE ACTING		BALL		TORTALIZER		TRAP		VALVE NORMALLY CLOSED	FT - FLOW TRANSMITTER
	PNEUMATIC DIAPHRAGM - DOUBLE ACTING		DIAPHRAGM		GATE		DISCHARGE TO ATMOSPHERE			PI - PRESSURE INDICATOR
	PNEUMATIC PISTON		3-WAY		CHECK VALVE		SAMPLING POINT			SP - SAMPLING POINT
			SLUICE		MOTORIZED 3 WAY		FLOW INDICATOR			AR - AIR RELEASE
										P - PUMP
										PG - PRESSURE GAUGE
										PS - PRESSURE SENSOR
										CP - CONNECTION POINT
										LT - LEVEL TRANSMITTER
										QIT - CONDUCTIVITY INDICATOR
										PLC - PROGRAMMABLE LOGIC CONTROLLER

IWRM PLANT P&I DETAIL D

NTS

N

Legend

Note:
- Separate pipeline to be laid out connecting the drain points around the plant area, CIP reject and feed water drain.
- Either Dry mount of submersible pumps to be used.

REV. NO.	Date	Revision Description	Drawn	Chkd	Appd.
R00	JUNE 2020	STAGE -1	PD	SBC	SD

Title:
Consultancy Services for Survey, Design and EIA works of Water Supply and Sewerage Facilities in 5 islands, Maldives - Package 6

Sub Title:
Water Supply System in Ga. Nilandhoo

Client:
Ministry of National Planning, Housing and Infrastructure, Republic of Maldives

EPOCH ASSOCIATES
T: +960 333 3528
E: info@epoch.associates
W: wwww.epoch.associates
A: G. Rosary West,
Husnuheenaa Magu, Male', Maldives

FEEDBACK INFRA
Working Infrastructure Happier

Drawn: F.I.A.	Checked: M.S.S.
Designed: F.I.A.	Approved: I.W.
Date: Aug 2020	SCALE (A3): 1:20
Project No: EP- WS/2019/06	
Rev: R-01	Page: W-09

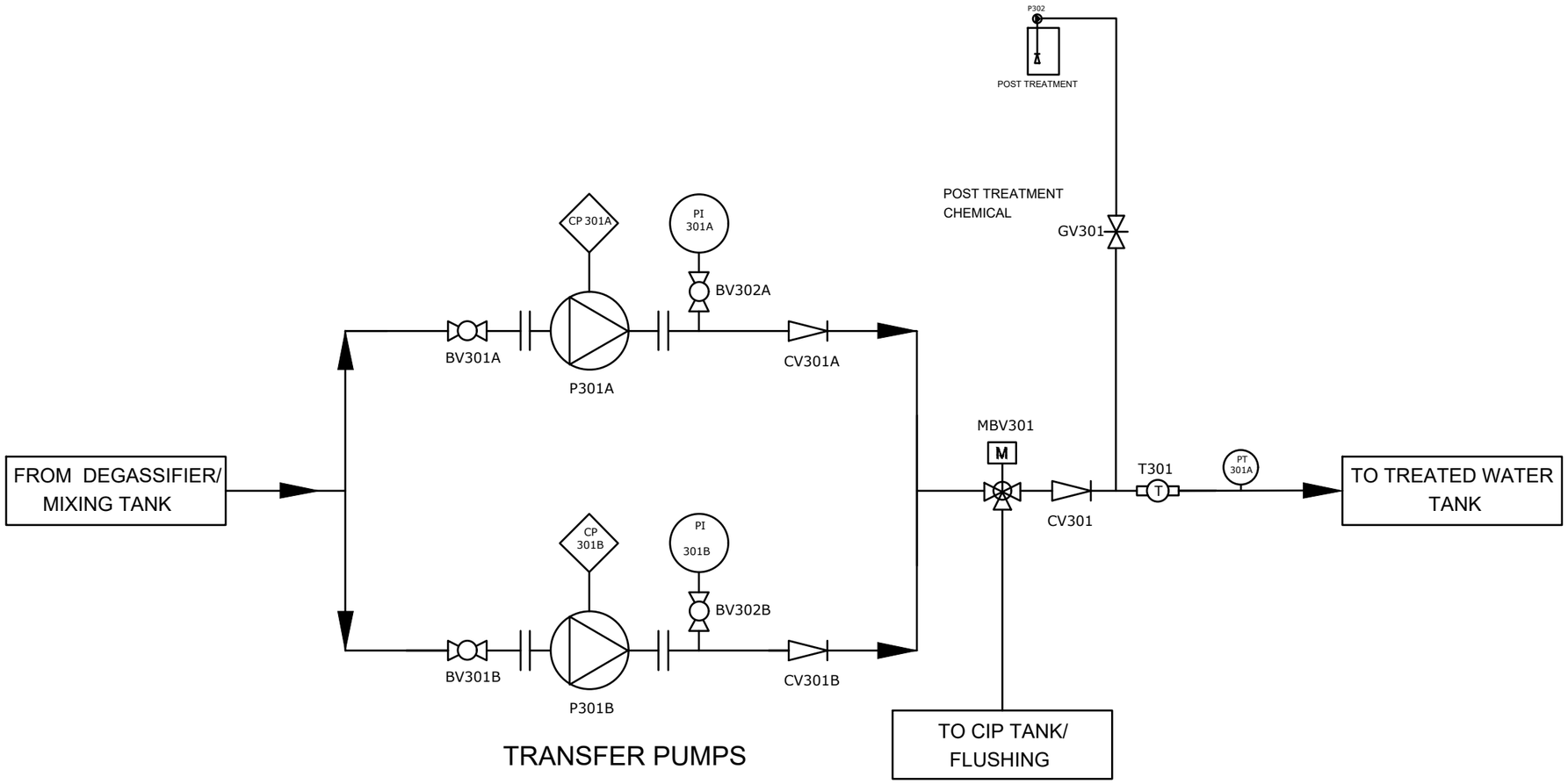

TRANSFER PUMPS

DETAIL E

LEGEND

ACTUATION	VALVES		FEATURES	CONDITION	ABBREVIATIONS
MANUALLY OPERATED	BUTTERFLY	MOTORIZED BALL	FLANGED CONNECTION	VALVE NORMALLY OPEN	LS - LEVEL SENSOR
PNEUMATIC DIAPHRAGM - SINGLE ACTING	BALL	TORTALIZER	TRAP	VALVE NORMALLY CLOSED	FT - FLOW TRANSMITTER
PNEUMATIC DIAPHRAGM - DOUBLE ACTING	DIAPHRAGM	GATE	DISCHARGE TO ATMOSPHERE		PI - PRESSURE INDICATOR
PNEUMATIC PISTON	3-WAY	CHECK VALVE	SAMPLING POINT		SP - SAMPLING POINT
	SLUICE	MOTORIZED 3 WAY	FLOW INDICATOR		AR - AIR RELEASE
					P - PUMP
					PG - PRESSURE GAUGE
					PS - PRESSURE SENSOR
					CP - CONNECTION POINT
					LT - LEVEL TRANSMITTER
					QIT - CONDUCTIVITY INDICATOR
					PLC - PROGRAMMABLE LOGIC CONTROLLER

IWRM PLANT P&I DETAIL E

NTS

Legend

REV. NO.	Date	Revision Description	Drawn	Chkd	Appd.
R00	JUNE 2020	STAGE -1	PD	SBC	SD

Title:

Consultancy Services for Survey, Design and EIA works of Water Supply and Sewerage Facilities in 5 islands, Maldives - Package 6

Sub Title:

Water Supply System in Ga. Nilandhoo

Client:

Ministry of National Planning, Housing and Infrastructure, Republic of Maldives

EPOCH ASSOCIATES
T: +960 333 3528
E: info@epoch.associates
W: www.epoch.associates
A: G. Rosary West,
Husnuheenaa Magu, Male', Maldives

FEEDBACK INFRA

Drawn:	F.I.A.	Checked:	M.S.S.
Designed:	F.I.A.	Approved:	I.W.
Date:	Aug 2020	SCALE (A3):	1:20

Project No: EP- WS/2019/06

Rev: **R-01**

Page: **W-10**

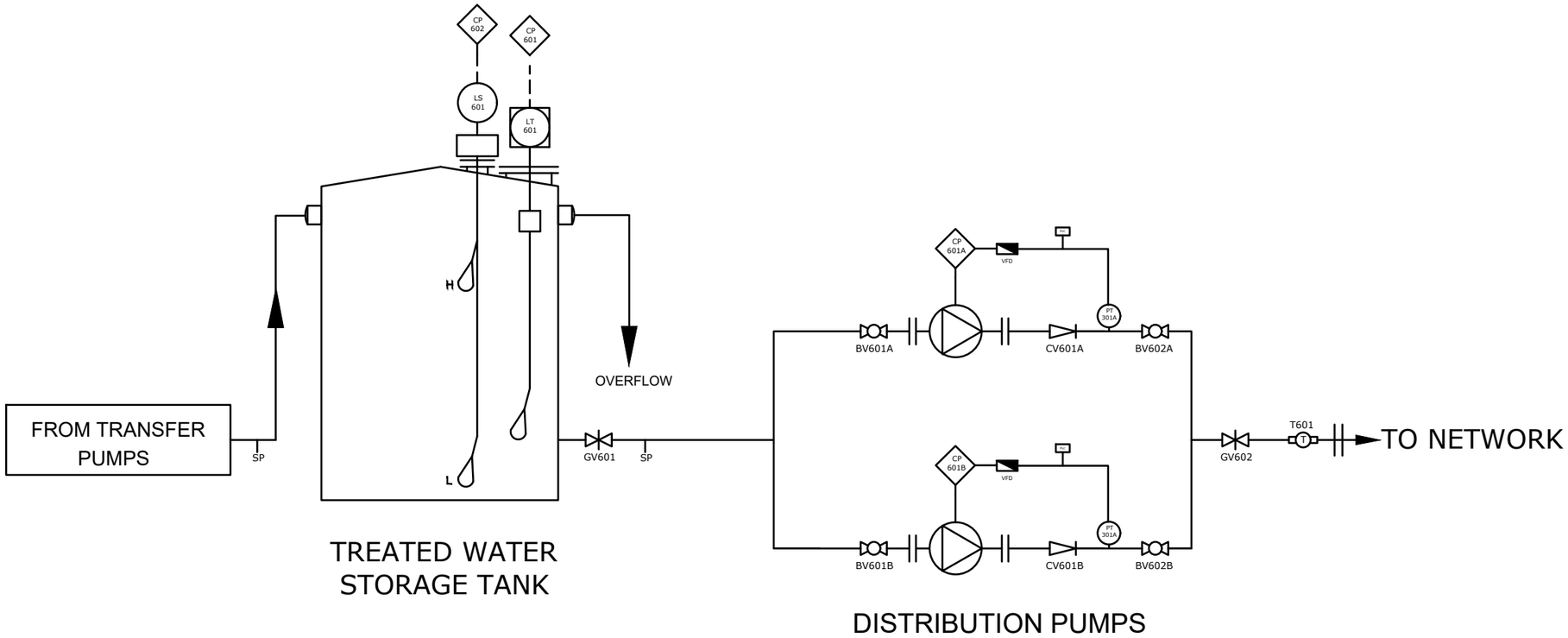

DETAIL F

LEGEND				
ACTUATION	VALVES	FEATURES	CONDITION	ABBREVIATIONS
MANUALLY OPERATED	BUTTERFLY	FLANGED CONNECTION	VALVE NORMALLY OPEN	LS - LEVEL SENSOR
PNEUMATIC DIAPHRAGM - SINGLE ACTING	BALL	TRAP	VALVE NORMALLY CLOSED	FT - FLOW TRANSMITTER
PNEUMATIC DIAPHRAGM - DOUBLE ACTING	DIAPHRAGM	DISCHARGE TO ATMOSPHERE		PI - PRESSURE INDICATOR
PNEUMATIC PISTON	3-WAY	SAMPLING POINT		SP - SAMPLING POINT
	SLUICE	FLOW INDICATOR		AR - AIR RELEASE
	MOTORIZED BALL			P - PUMP
	TORTALIZER			PG - PRESSURE GAUGE
	GATE			PS - PRESSURE SENSOR
	CHECK VALVE			CP - CONNECTION POINT
	MOTORIZED 3 WAY			LT - LEVEL TRANSMITTER
				QIT - CONDUCTIVITY INDICATOR
				PLC - PROGRAMMABLE LOGIC CONTROLLER

IWRM PLANT P&I DETAIL F

NTS

N

Legend

REV. NO.	Date	Revision Description	Drawn	Chkd	Appd.
R00	JUNE 2020	STAGE -1	PD	SBC	SD

Title:

Consultancy Services for Survey, Design and EIA works of Water Supply and Sewerage Facilities in 5 islands, Maldives - Package 6

Sub Title:

Water Supply System in Ga. Nilandhoo

Client:

Ministry of National Planning, Housing and Infrastructure, Republic of Maldives

EPOCH ASSOCIATES PVT. LTD.
T: +960 333 3528
E: info@epoch.associates
W: www.epoch.associates
A: G. Rosary West, Husnuheenaa Magu, Male', Maldives

FEEDBACK INFRA

Drawn:	F.I.A.	Checked:	M.S.S.
Designed:	F.I.A.	Approved:	I.W.
Date:	Aug 2020	SCALE (A3):	1:20

Project No: EP- WS/2019/06

Rev: **R-01**

Page: **W-11**

UV DISINFECTION

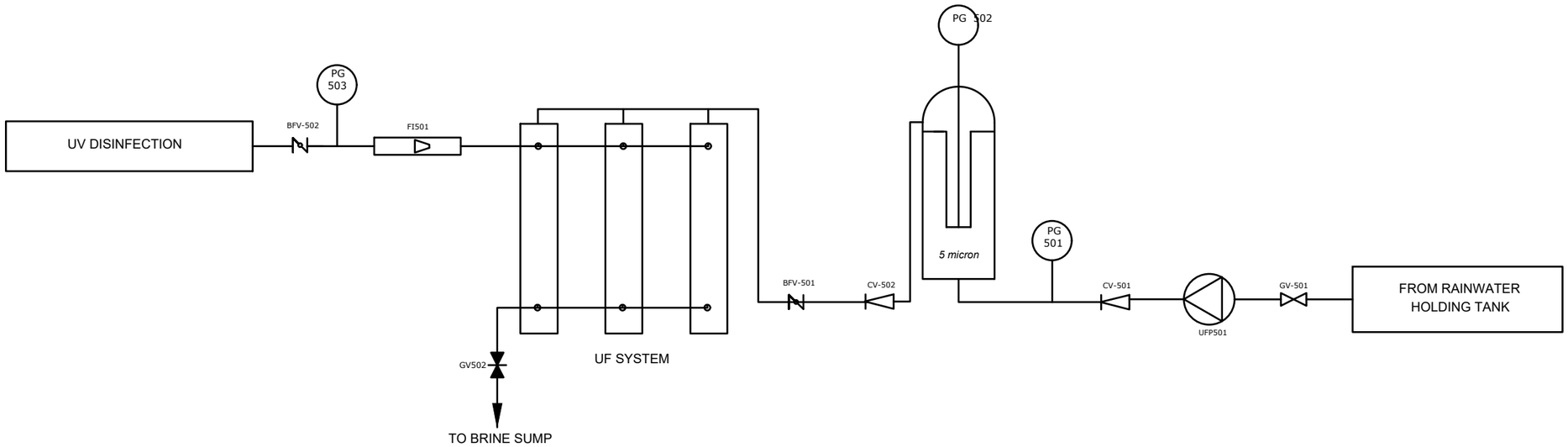

DETAIL G

LEGEND				
ACTUATION	VALVES	FEATURES	CONDITION	ABBREVIATIONS
MANUALLY OPERATED	BUTTERFLY	FLANGED CONNECTION	VALVE NORMALLY OPEN	LS - LEVEL SENSOR
PNEUMATIC DIAPHRAGM - SINGLE ACTING	BALL	TRAP	VALVE NORMALLY CLOSED	FT - FLOW TRANSMITTER
PNEUMATIC DIAPHRAGM - DOUBLE ACTING	DIAPHRAGM	DISCHARGE TO ATMOSPHERE		PI - PRESSURE INDICATOR
PNEUMATIC PISTON	3-WAY	SAMPLING POINT		SP - SAMPLING POINT
	SLUICE	FLOW INDICATOR		AR - AIR RELEASE
	MOTORIZED BALL			P - PUMP
	TORTALIZER			PG - PRESSURE GAUGE
	GATE			PS - PRESSURE SENSOR
	CHECK VALVE			CP - CONNECTION POINT
	MOTORIZED 3 WAY			LT - LEVEL TRANSMITTER
				QIT - CONDUCTIVITY INDICATOR
				PLC - PROGRAMMABLE LOGIC CONTROLLER

IWRM PLANT P&I DETAIL G

NTS

N

Legend

REV. NO.	Date	Revision Description	Drawn	Chkd	Appd.
R00	JUNE 2020	STAGE -1	PD	SBC	SD

Title:

Consultancy Services for Survey, Design and EIA works of Water Supply and Sewerage Facilities in 5 islands, Maldives - Package 6

Sub Title:

Water Supply System in Ga. Nilandhoo

Client:

Ministry of National Planning, Housing and Infrastructure, Republic of Maldives

EPOCH ASSOCIATES
T: +960 333 3528
E: info@epoch.associates
W: www.epoch.associates
A: G. Rosary West, Husnuheenaa Magu, Male', Maldives

FEEDBACK INFRA

Drawn:	F.I.A.	Checked:	M.S.S.
Designed:	F.I.A.	Approved:	I.W.
Date:	Aug 2020	SCALE (A3):	1:20

Project No: EP- WS/2019/06

Rev: **R-01**

Page: **W-12**

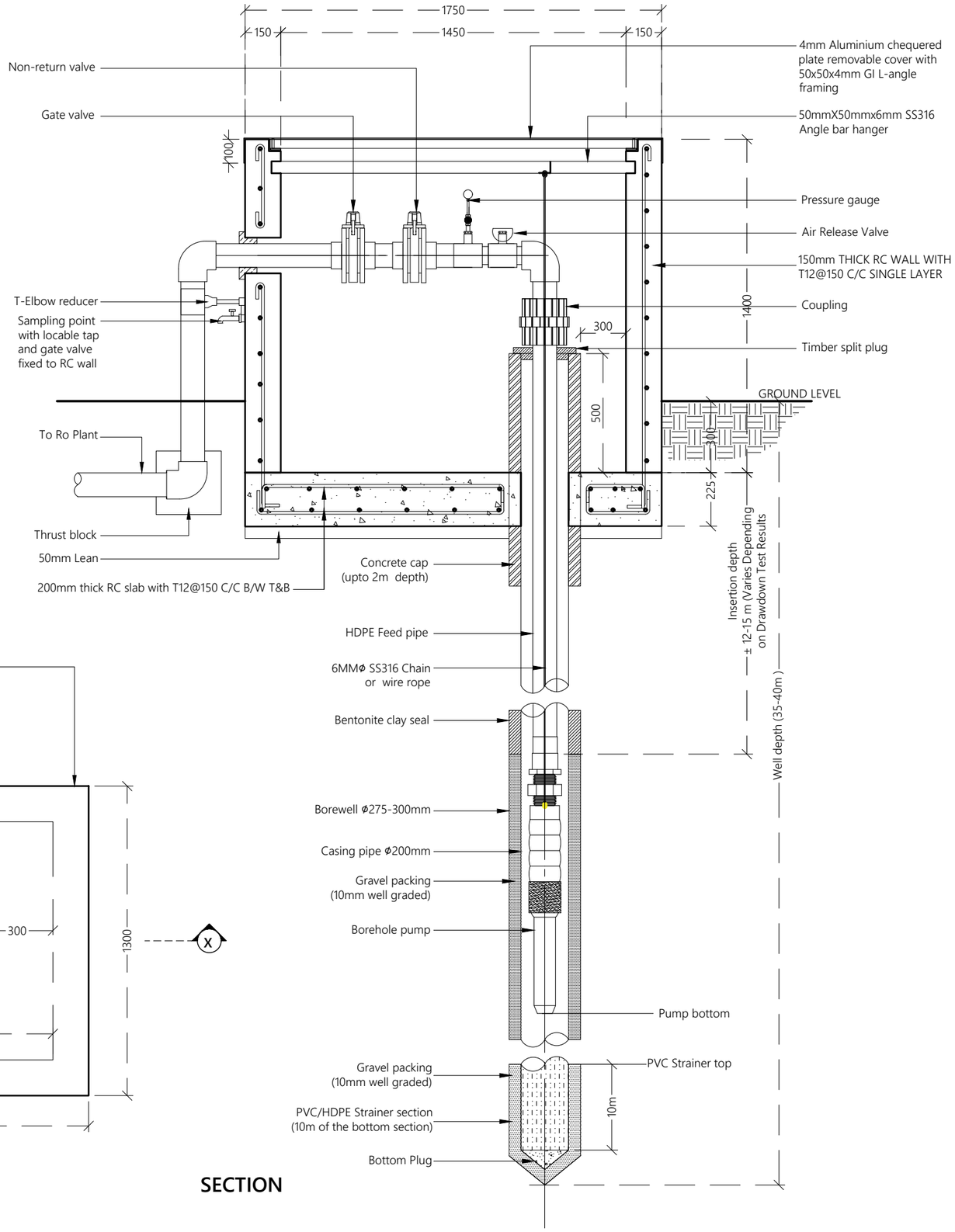

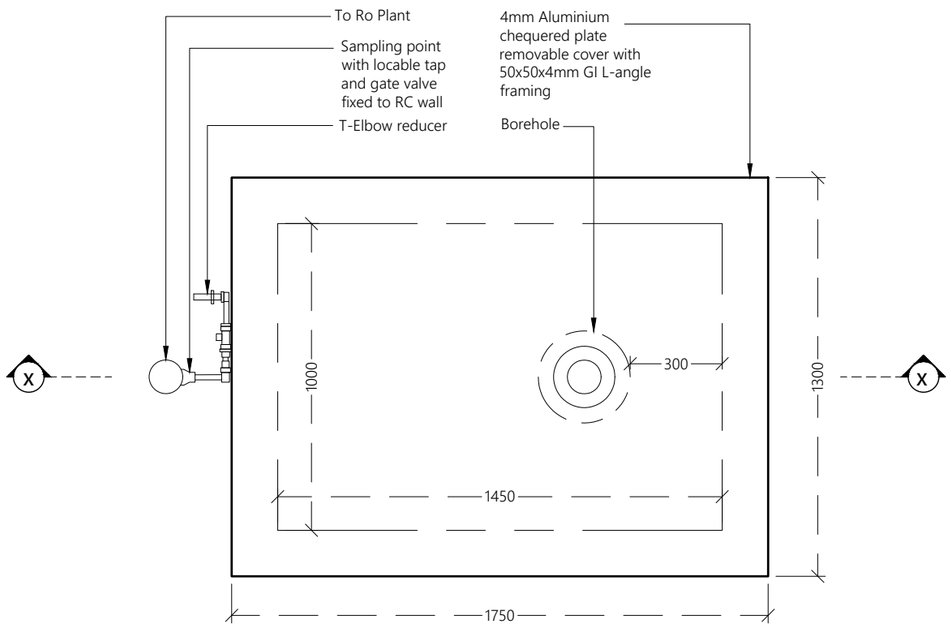

PLAN

SECTION

BOREHOLE DETAILS

NTS

N

Legend

REV. NO.	Date	Revision Description	Drawn	Chkd	Appd.
R00	JUNE 2020	STAGE -1	PD	SBC	SD

Title:

Consultancy Services for Survey, Design and EIA works of Water Supply and Sewerage Facilities in 5 islands, Maldives - Package 6

Sub Title:

Water Supply System in Ga. Nilandhoo

Client:

Ministry of National Planning, Housing and Infrastructure, Republic of Maldives

EPOCH ASSOCIATES
T: +960 333 3528
E: info@epoch.associates
W: www.epoch.associates
A: G. Rosary West, Husnuheenaa Magu, Male', Maldives

FEEDBACK INFRA
Making Infrastructure Happen

Drawn: F.I.A.	Checked: M.S.S.
Designed: F.I.A.	Approved: I.W.
Date: Aug 2020	SCALE (A3): 1:20
Project No: EP- WS/2019/06	
Rev: R-01	Page: W-13

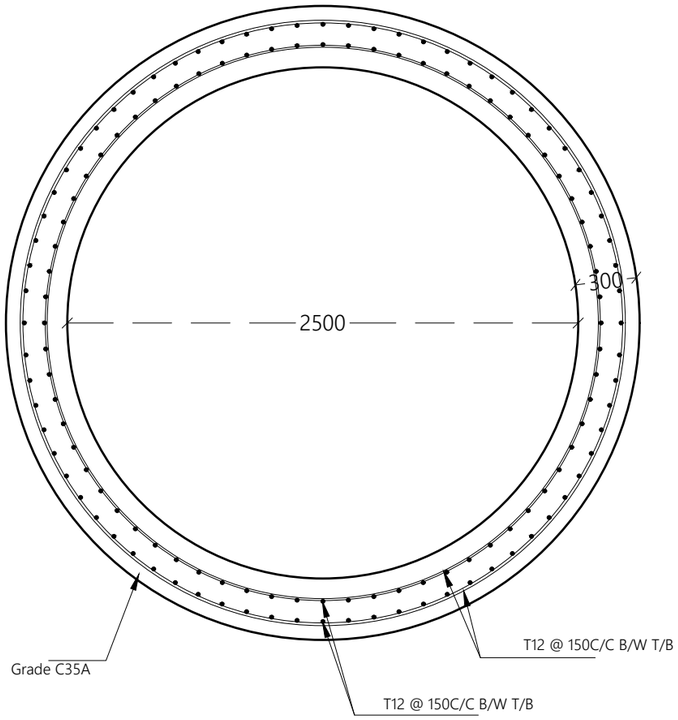

BRINE WATER TANK PLAN - STRUCTURAL

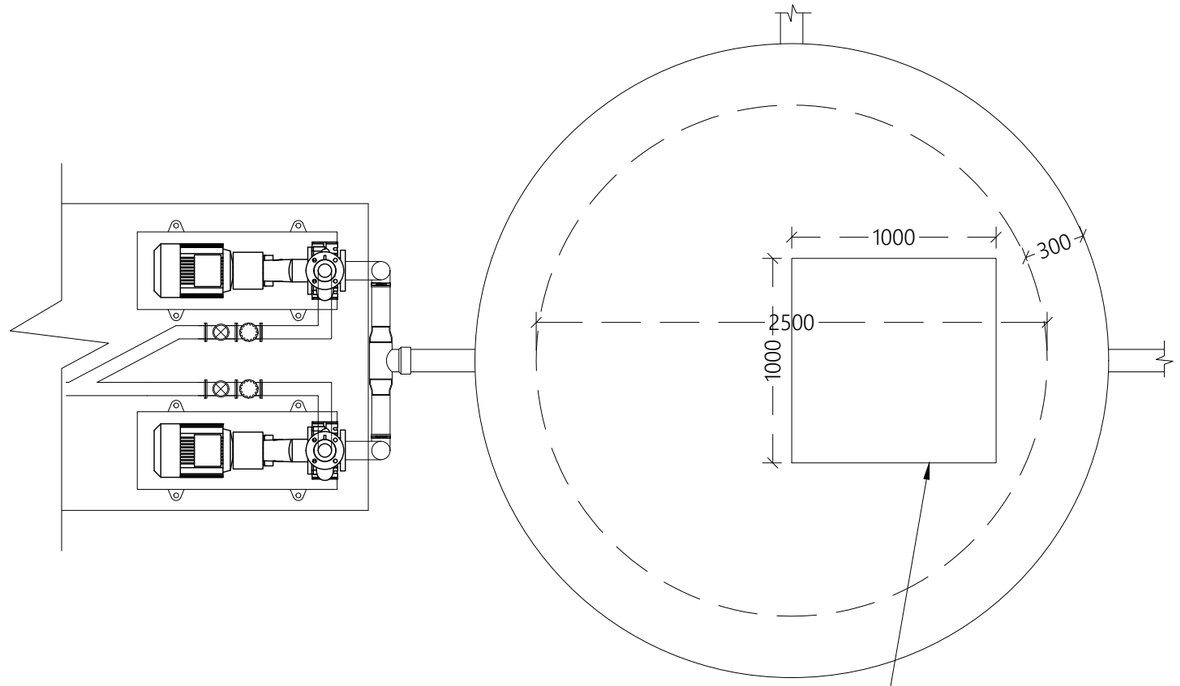

BRINE WATER TANK PLAN

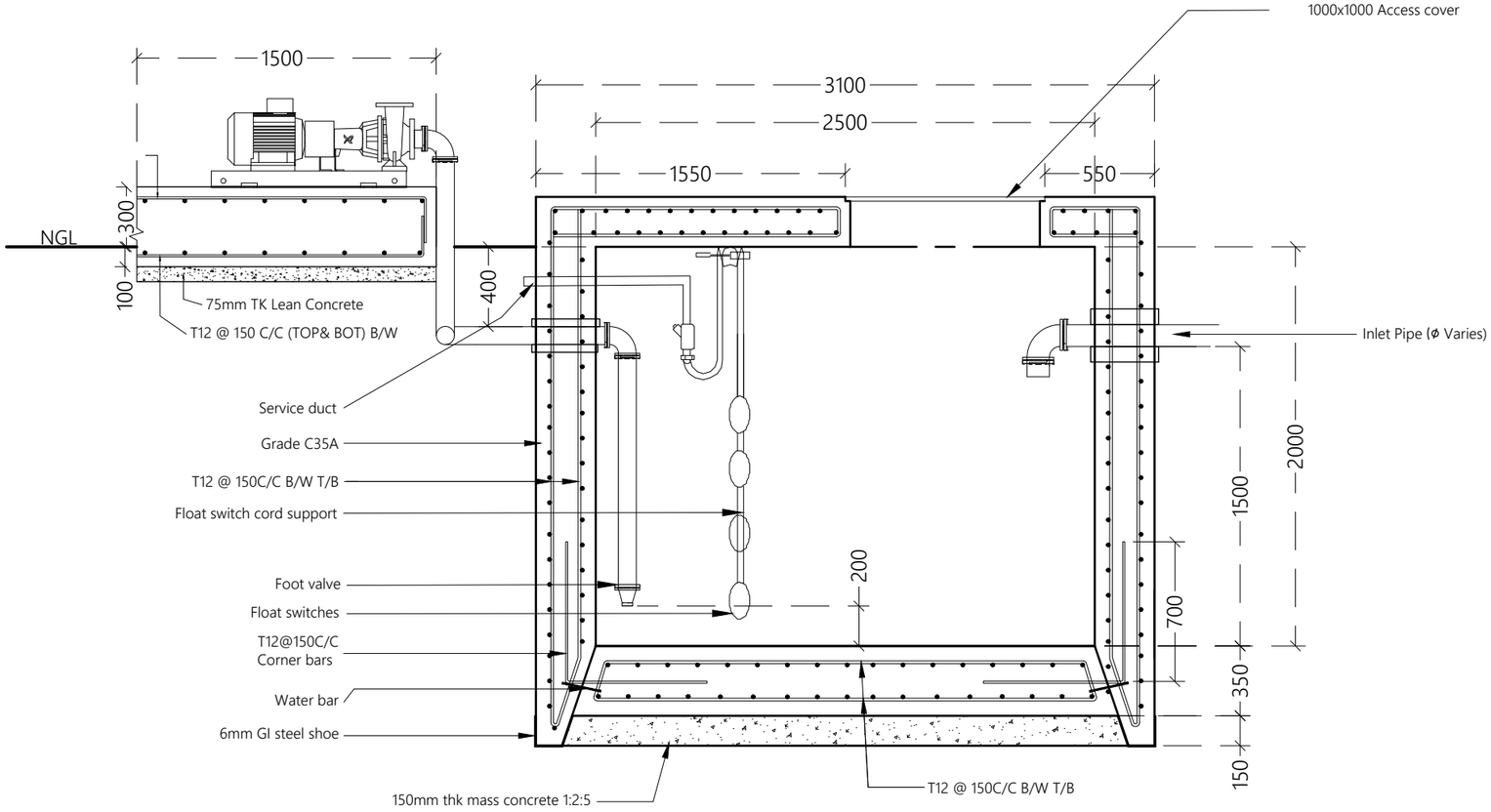

BRINE WATER TANK SECTION X-X

BRINE TANK DETAILS

1:30

N

Legend

Note:
- Pumps, pipe work, fittings and control panel shall be installed in accordance with manufacturers recommendations.
- Orientation of tanks and pipe work to suit location.

REV. NO.	Date	Revision Description	Drawn	Chkd	Appd.
R00	JUNE 2020	STAGE -1	PD	SBC	SD

Title:
Consultancy Services for Survey, Design and EIA works of Water Supply and Sewerage Facilities in 5 islands, Maldives - Package 6

Sub Title:
Water Supply System in Ga. Nilandhoo

Client:
Ministry of National Planning, Housing and Infrastructure, Republic of Maldives

EPOCH ASSOCIATES
T: +960 333 3528
E: info@epoch.associates
W: wwww.epoch.associates
A: G. Rosary West, Husnuheenaa Magu, Male', Maldives

FEEDBACK INFRA
Working Infrastructure Happier

Drawn: F.I.A.	Checked: M.S.S.
Designed: F.I.A.	Approved: I.W.
Date: Aug 2020	SCALE (A3): 1:20
Project No: EP- WS/2019/06	
Rev: R-01	Page: W-14

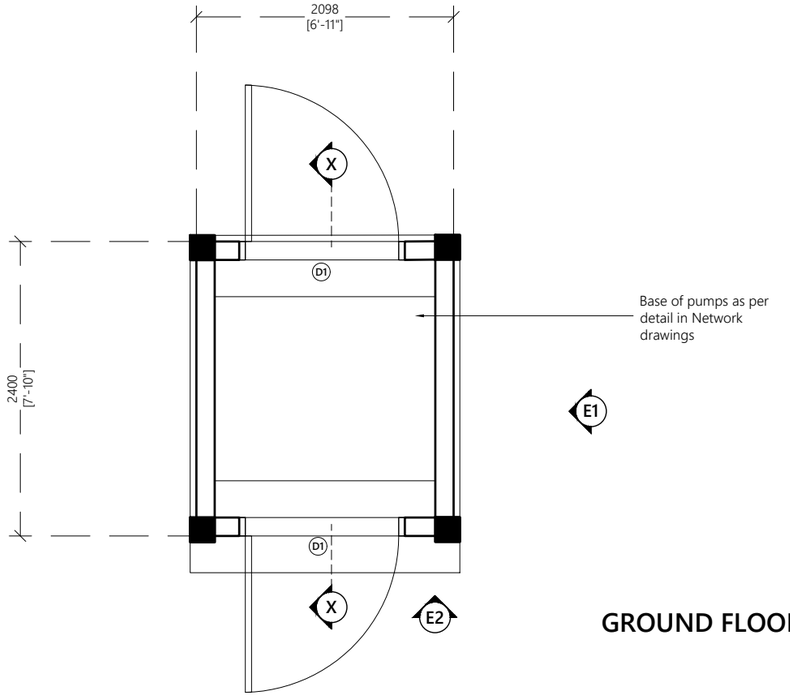

GROUND FLOOR PLAN

1:50

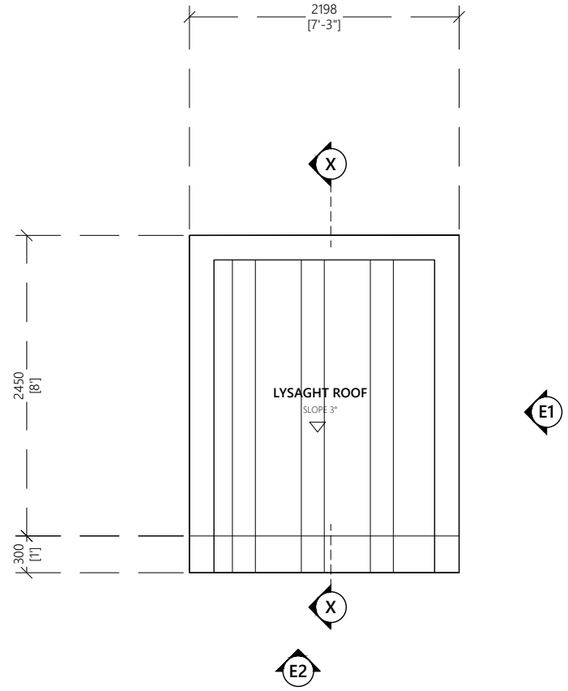

ROOF PLAN

1:50

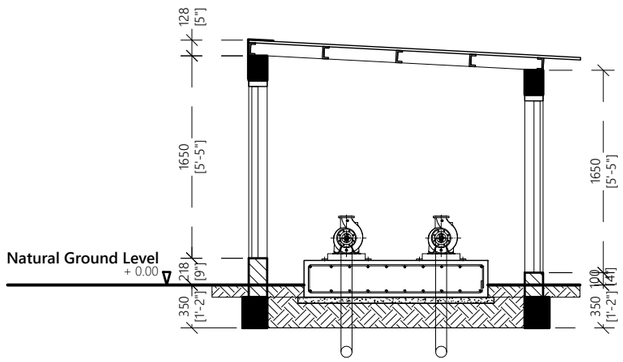

SECTION X-X

1:50

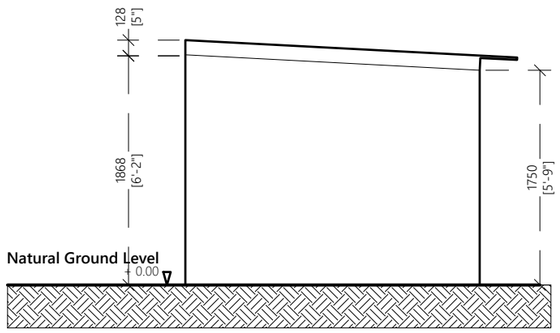

ELEVATION E1

1:100

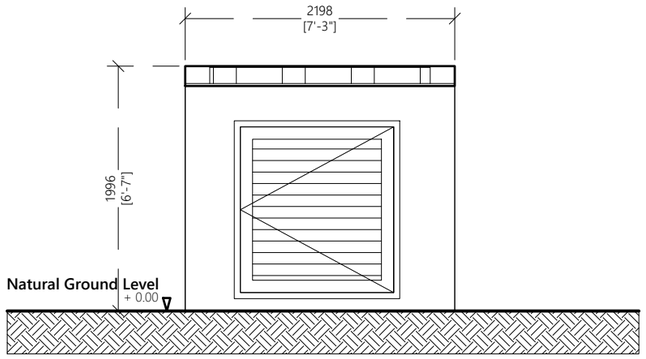

ELEVATION E2

1:100

PUMP SHED DETAILS

N

Legend

REV. NO.	Date	Revision Description	Drawn	Chkd	Appd.
R00	JUNE 2020	STAGE -1	PD	SBC	SD

Title:

Consultancy Services for Survey, Design and EIA works of Water Supply and Sewerage Facilities in 5 islands, Maldives - Package 6

Sub Title:

Water Supply System in Ga. Nilandhoo

Client:

Ministry of National Planning, Housing and Infrastructure, Republic of Maldives

EPOCH ASSOCIATES

T: +960 333 3528
E: info@epoch.associates
W: www.epoch.associates
A: G. Rosary West,
Husnuheenaa Magu, Male', Maldives

FEEDBACK INFRA

Drawn: F.I.A.	Checked: M.S.S.
Designed: F.I.A.	Approved: I.W.
Date: Aug 2020	SCALE (A3): 1:20

Project No: EP- WS/2019/06

Rev: **R-01**

Page: **W-15**

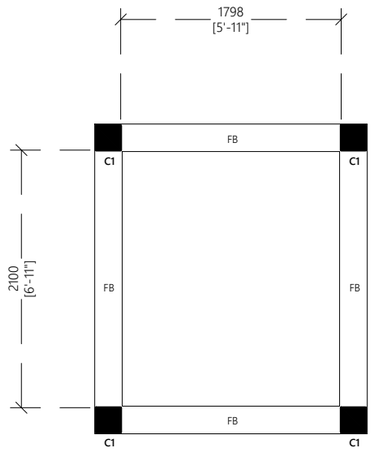

GROUND FLOOR PLAN

1:100

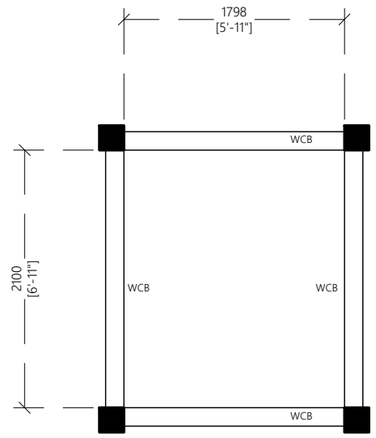

ROOF PLAN

1:100

Door ID	
Plan view	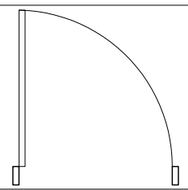
Elevation view FFL	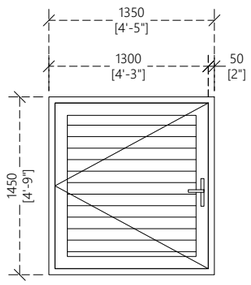
Frame material	600 micron powder coated aluminum frames
Panel material	600 micron powder coated aluminum louvered panel with side aluminum frames with allowance for handle and lock
Openable area	-

General Door Notes:

Dimensions shown on DWG indicate effective openings of frame

All frame depths are 100mm
All dor panel thicknesses are 35mm
All window manel thickness are 25mm
Al frame edges shal be trimmed 3mm

All wodden components should be wood stained finish

All glazing should be of 6mm unless specified

External units must comply the following weather conditions:-
Wind pressure: 200 kg/sqm
Water tightness: 25 kg/sqm

All external frames / wall joints must be sealed with silicon sealant and the wedges trimmed with 12X12mm hardwood beading fixed to frames by brass nails

All hardware should be provided for the performance of al functions of the units

Hinges shall confirm to
1. Door size more than 700X1900mm
   WD: 125mm X2 sets
   SD: 150mm X3 sets
2. Door size less than 700X1900mm
   WD: 100mm X2 sets
   SD: 125mm X2 sets

Locks shall be cylinderical with master key sets

Door knobs shall be1000mm above FFL

Door Schedule

1:100

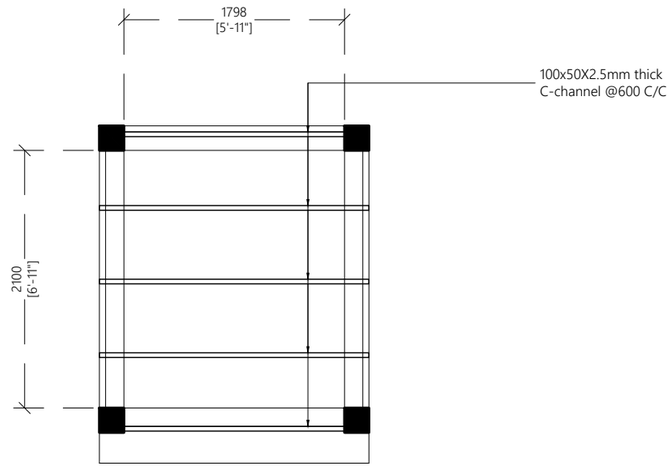

ROOF PLAN

1:100

PUMP SHED DETAILS

N

Legend

Notes:

- All CHS shall have minimum yield stress of 275MPa
- All welds shall be 6mm thick full perimeter fillet welds
- All Truss ends shall be end capped with 6mm plates
- All truss members shall be protected with anti corrosive coatings

REV. NO.	Date	Revision Description	Drawn	Chkd	Appd.
R00	JUNE 2020	STAGE -1	PD	SBC	SD

Title:
Consultancy Services for Survey, Design and EIA works of Water Supply and Sewerage Facilities in 5 islands, Maldives - Package 6

Sub Title:
Water Supply System in Ga. Nilandhoo

Client:
Ministry of National Planning, Housing and Infrastructure, Republic of Maldives

EPOCH Associates
T: +960 333 3528
E: info@epoch.associates
W: wwww.epoch.associates
A: G. Rosary West,
Husnuheenaa Magu, Male', Maldives

FEEDBACK INFRA
Working Infrastructure Happier

Drawn: F.I.A.	Checked: M.S.S.
Designed: F.I.A.	Approved: I.W.
Date: Aug 2020	SCALE (A3): 1:20
Project No: EP- WS/2019/06	
Rev: R-01	Page: W-16

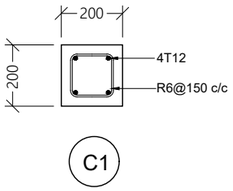

COLUMN DETAIL

1:20

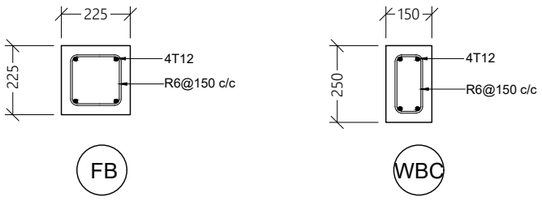

BEAM DETAILS

1:20

PUMP SHED DETAILS

1:20

N

Legend

REV. NO.	Date	Revision Description	Drawn	Chkd	Appd.
R00	JUNE 2020	STAGE -1	PD	SBC	SD

Title:

Consultancy Services for Survey, Design and EIA works of Water Supply and Sewerage Facilities in 5 islands, Maldives - Package 6

Sub Title:

Water Supply System in Ga. Nilandhoo

Client:

Ministry of National Planning, Housing and Infrastructure, Republic of Maldives

T: +960 333 3528
E: info@epoch.associates
W: www.epoch.associates
A: G. Rosary West,
Husnuheenaa Magu, Male', Maldives

Drawn:	F.I.A.	Checked:	M.S.S.
Designed:	F.I.A.	Approved:	I.W.
Date:	Aug 2020	SCALE (A3):	1:20

Project No: EP- WS/2019/06

Rev: **R-01**

Page: **W-17**

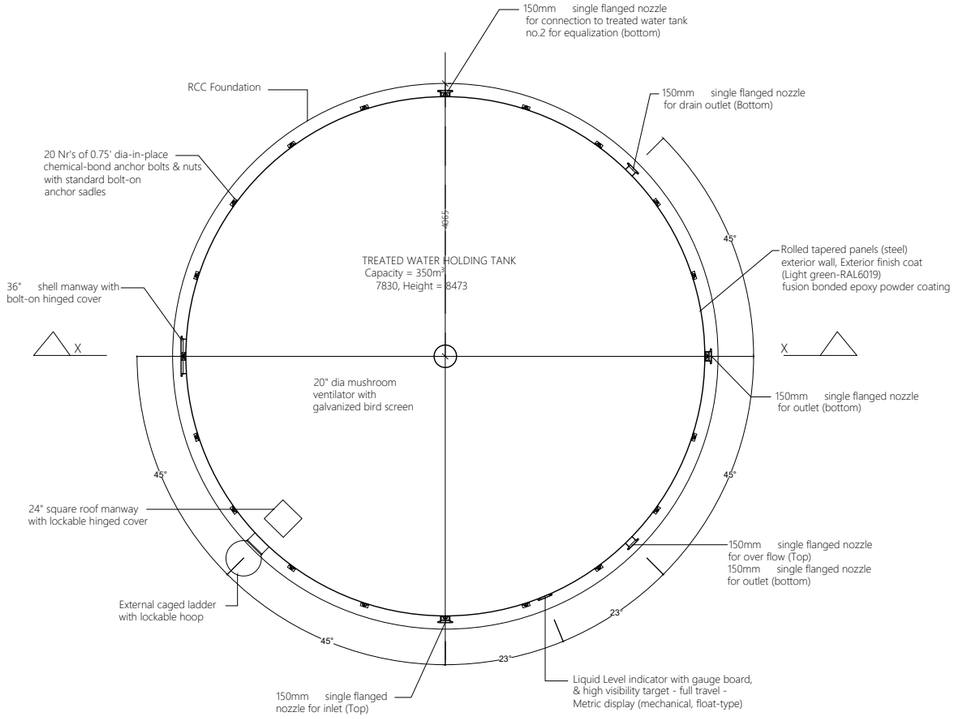

TREATED WATER HOLDING TANK AND FOUNDATION- PLAN

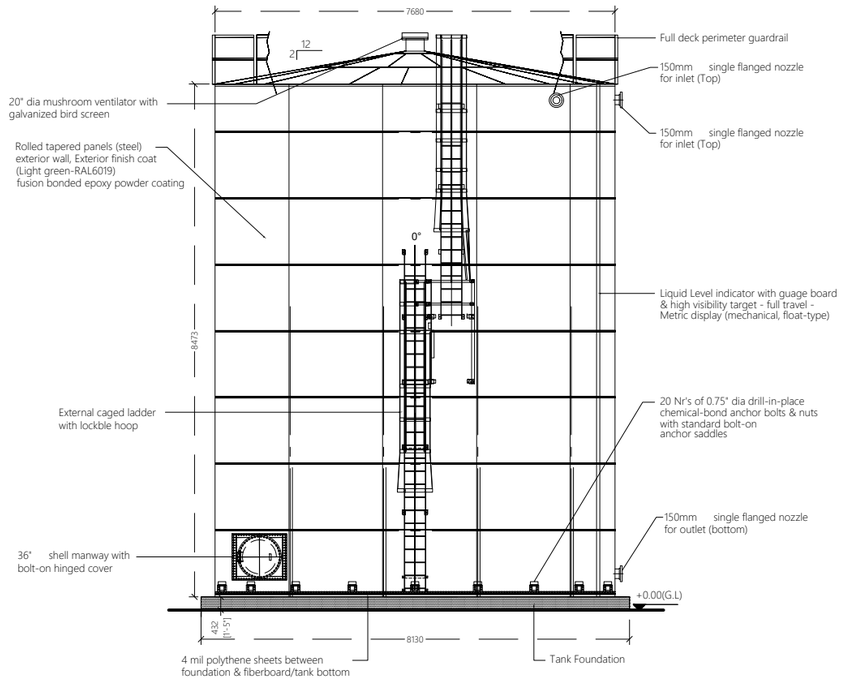

TREATED WATER HOLDING TANK AND FOUNDATION- ELEVATION

7.68 D 8.473 H

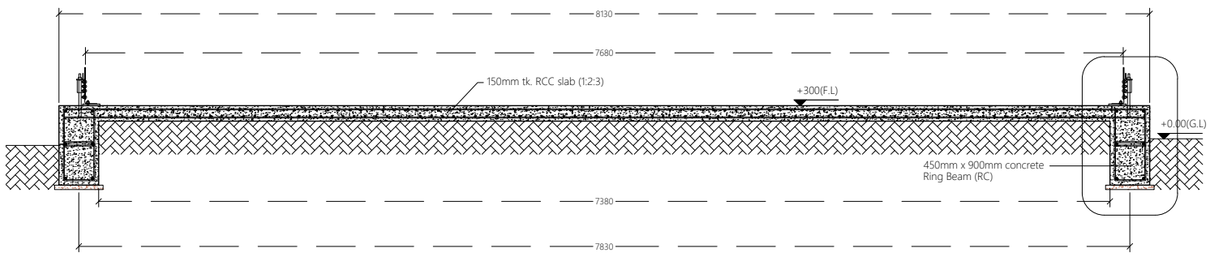

SECTION X-X

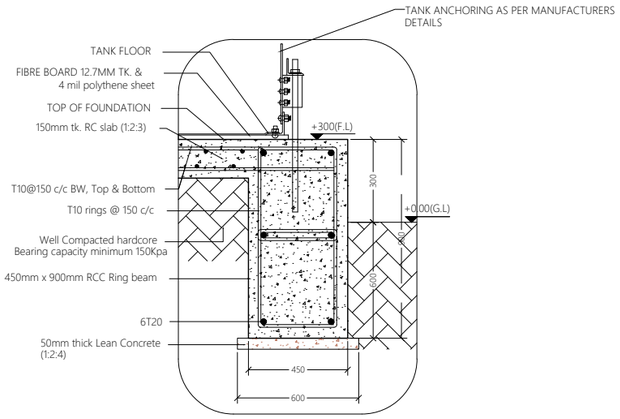

DETAIL

Note:-
Cover = 50mm
Lap length 50

TREATED WATER TANK DETAILS

NTS

Legend

REV. NO.	Date	Revision Description	Drawn	Chkd	Appd.
R00	JUNE 2020	STAGE -1	PD	SBC	SD

Title:
Consultancy Services for Survey, Design and EIA works of Water Supply and Sewerage Facilities in 5 islands, Maldives - Package 6

Sub Title:
Water Supply System in Ga. Nilandhoo

Client:
Ministry of National Planning, Housing and Infrastructure, Republic of Maldives

EPOCH ASSOCIATES
T: +960 333 3528
E: info@epoch.associates
W: www.epoch.associates
A: G. Rosary West,
Husnuheenaa Magu, Male', Maldives

FEEDBACK INFRA

Drawn: F.I.A.	Checked: M.S.S.
Designed: F.I.A.	Approved: I.W.
Date: Aug 2020	SCALE (A3): 1:20

Project No: EP- WS/2019/06

Rev: **R-01**

Page: **W-18**

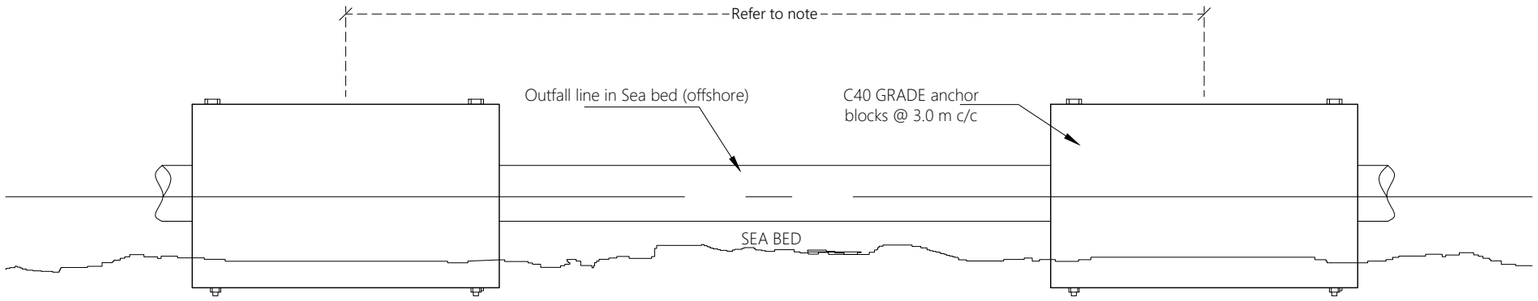

BALLAST BLOCK SIDE ELEVATION

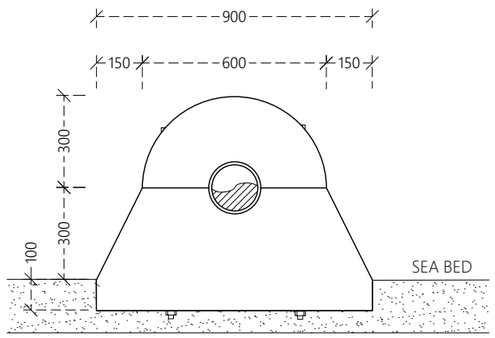

BALLAST BLOCK FRONT ELEVATION

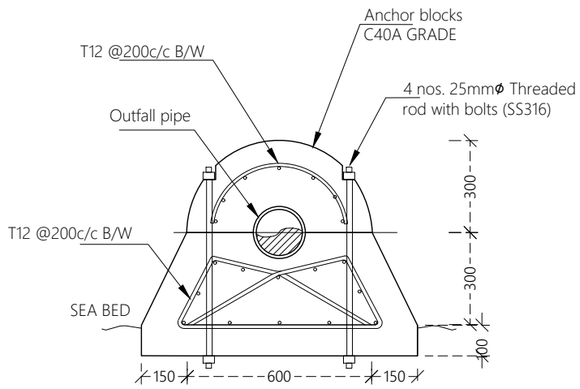

BALLAST BLOCK SECTION

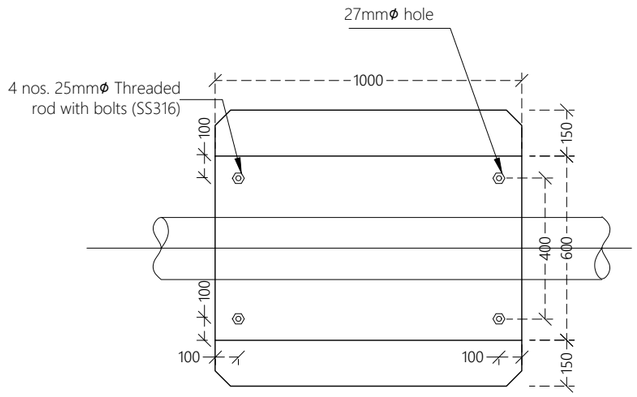

BALLAST BLOCK PLAN

BALLAST BLOCK DETAILS

NTS

N

Legend

Notes:

- All backing rings for stub flanges , nuts and bolts shall be grade 316 stainless steel.
- All pipe work shall be bedded on 10mm thick neoprene rubber seat in semicircular recess matching the O.D. the pipe.
- Fabricate specific pipe clamps to provide firm clamping action according to pipe O.D.
- All structural concrete shall be of grade C40A.
- All castings shall be done using sulphate resistant portland cement to BS 4027:1996.
- All structural reinforcement shall be epoxy coating of non-pre-stressed reinforcement to ASTM-A775/A775M.
- A cover of 75mm should be given for all reinforcements.

REV. NO.	Date	Revision Description	Drawn	Chkd	Appd.
R00	JUNE 2020	STAGE -1	PD	SBC	SD

Title:

Consultancy Services for Survey, Design and EIA works of Water Supply and Sewerage Facilities in 5 islands, Maldives - Package 6

Sub Title:

Water Supply System in Ga. Nilandhoo

Client:

Ministry of National Planning, Housing and Infrastructure, Republic of Maldives

EPOCH Associates (Pvt) Ltd

T: +960 333 3528
E: info@epoch.associates
W: wwww.epoch.associates
A: G. Rosary West,
Husnuheenaa Magu, Male', Maldives

FEEDBACK INFRA
Working Infrastructure Happier

Drawn: F.I.A.	Checked: M.S.S.
Designed: F.I.A.	Approved: I.W.
Date: Aug 2020	SCALE (A3): 1:20
Project No: EP- WS/2019/06	
Rev: **R-01**	Page: **W-19**

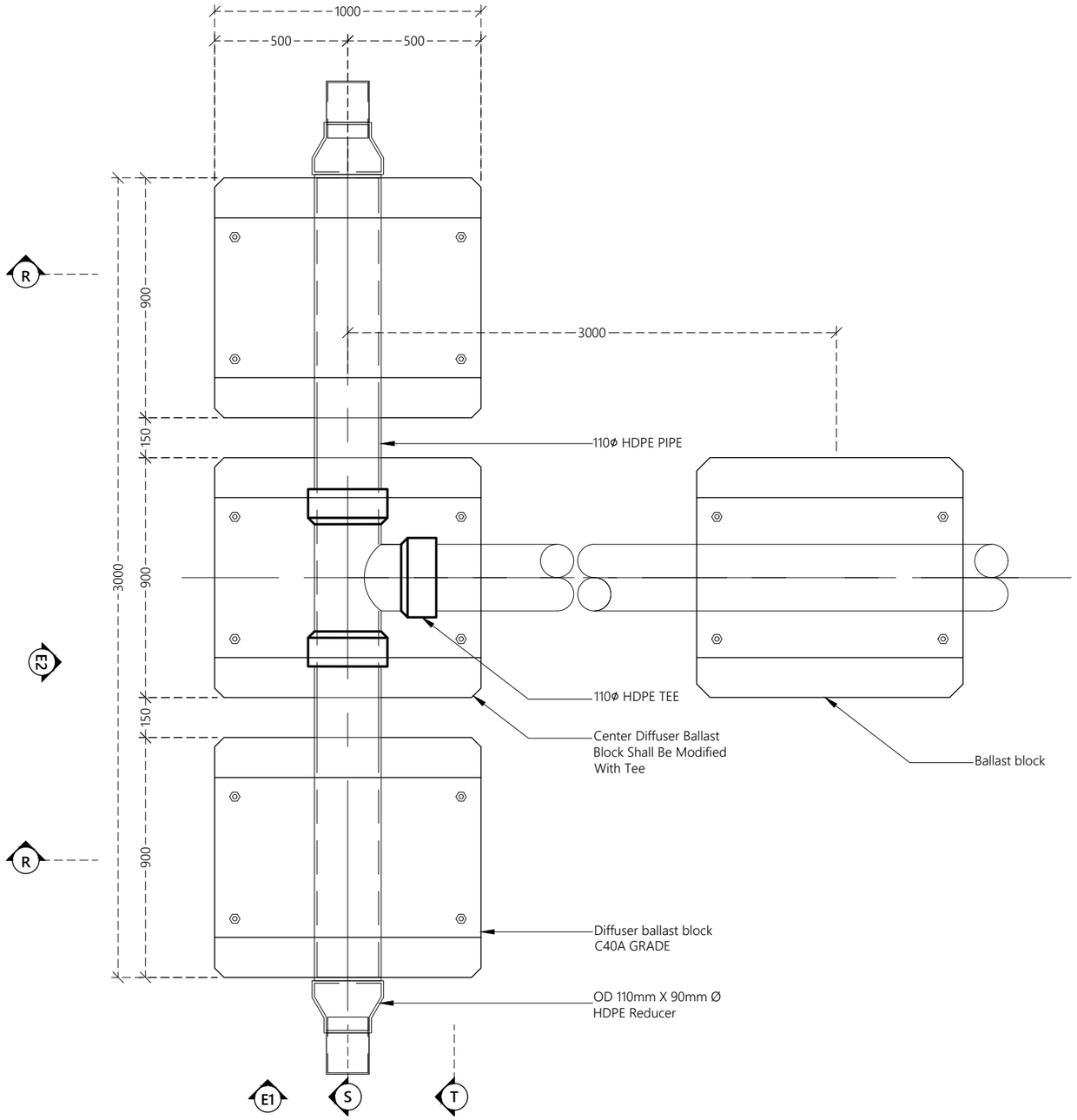

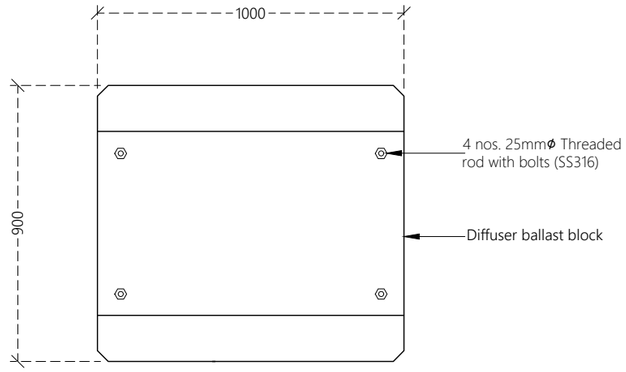

DIFFUSER BALLAST BLOCK PLAN

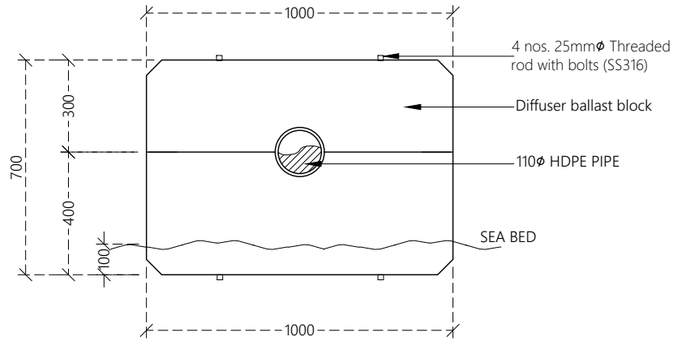

DIFFUSER BALLAST BLOCK FRONT ELEVATION - E1

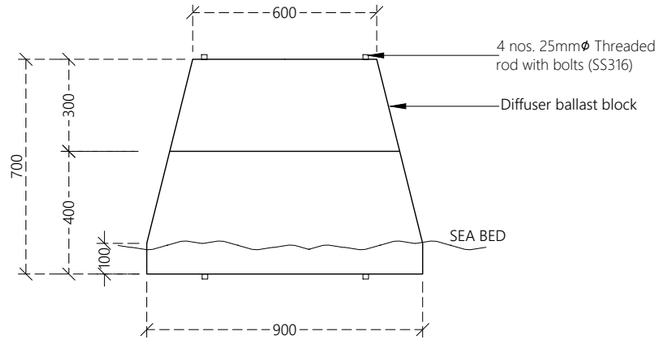

DIFFUSER BALLAST BLOCK FRONT ELEVATION - E2

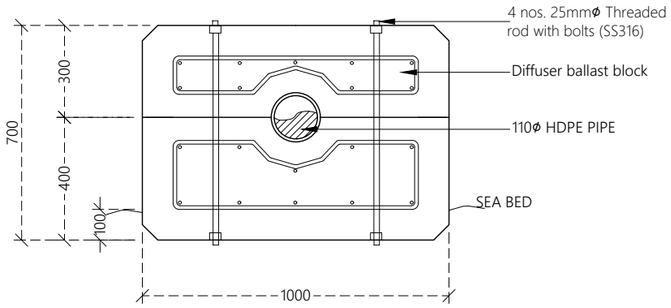

DIFFUSER BALLAST BLOCK SECTION - R

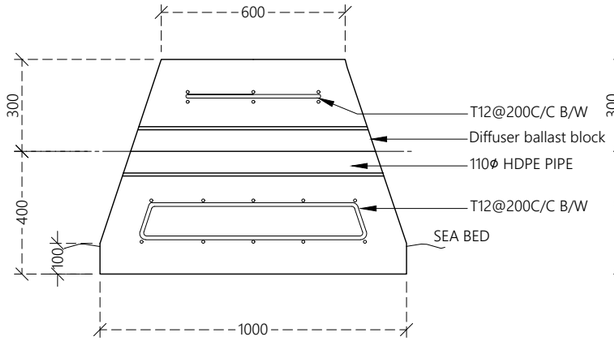

DIFFUSER BALLAST BLOCK SECTION - S

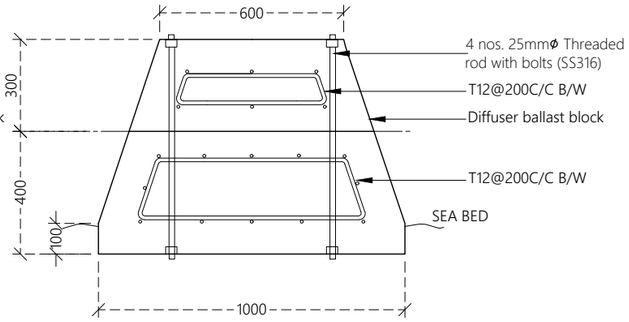

DIFFUSER BALLAST BLOCK SECTION - T

DIFFUSER DETAILS

NTS

N

Legend

Notes:

- All backing rings for stub flanges , nuts and bolts shall be grade 316 stainless steel.
- All pipe work shall be bedded on 10mm thick neoprene rubber seat in semicircular recess matching the O.D. the pipe.
- Fabricate specific pipe clamps to provide firm clamping action according to pipe O.D.
- All structural concrete shall be of grade C40A.
- All castings shall be done using sulphate resistant portland cement to BS 4027:1996.
- All structural reinforcement shall be epoxy coating of non-pre-stressed reinforcement to ASTM-A775/A775M.
- A cover of 75mm should be given for all reinforcements.

REV. NO.	Date	Revision Description	Drawn	Chkd	Appd.
R00	JUNE 2020	STAGE -1	PD	SBC	SD

Title:
Consultancy Services for Survey, Design and EIA works of Water Supply and Sewerage Facilities in 5 islands, Maldives - Package 6

Sub Title:
Water Supply System in Ga. Nilandhoo

Client:
Ministry of National Planning, Housing and Infrastructure, Republic of Maldives

EPOCH ASSOCIATES
T: +960 333 3528
E: info@epoch.associates
W: www.epoch.associates
A: G. Rosary West, Husnuheenaa Magu, Male', Maldives
FEEDBACK INFRA
Walking the Infrastructure Journey

Drawn: F.I.A.	Checked: M.S.S.
Designed: F.I.A.	Approved: I.W.
Date: Aug 2020	SCALE (A3): 1:20
Project No: EP- WS/2019/06	
Rev: R-01	Page: W-20

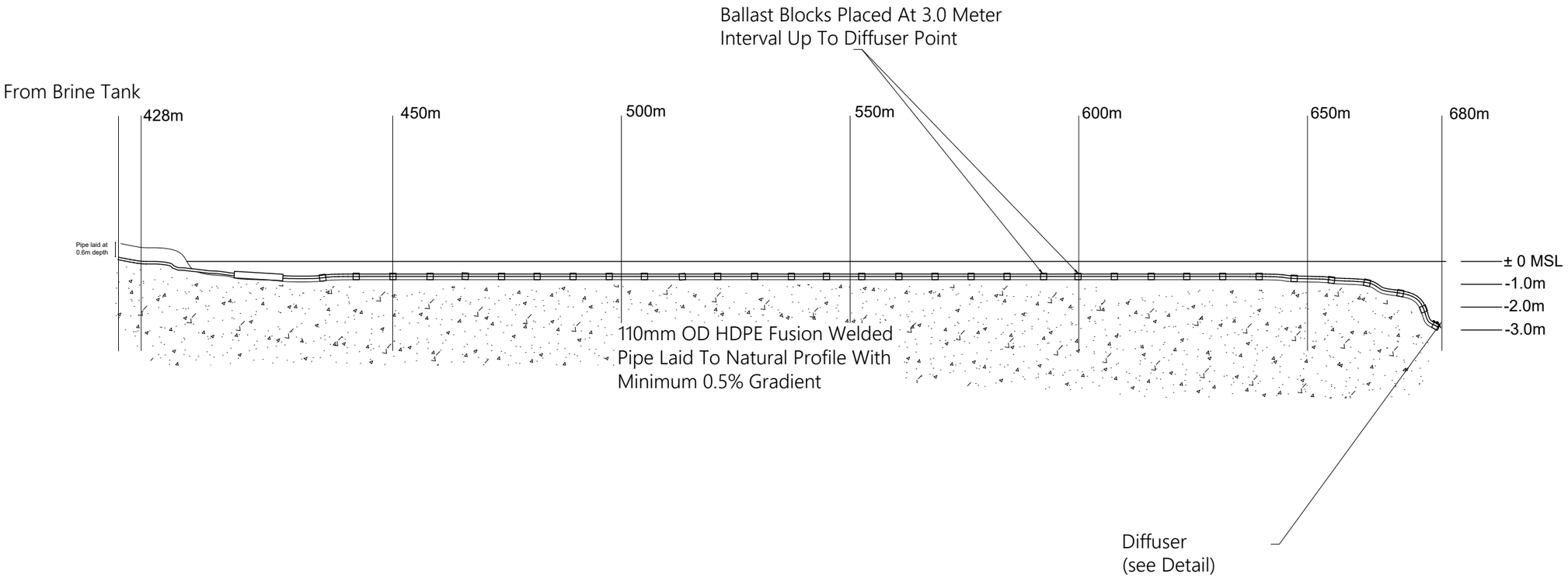

BRINE SEA OUTFALL DETAIL

NTS

N

Legend

Notes:

- The contractor to undertake a detailed inspection of the outfall site to assess the profile and condition of the reef below sea level and to prepare his methodology for installation and fixing.

REV. NO.	Date	Revision Description	Drawn	Chkd	Appd.
R00	JUNE 2020	STAGE -1	PD	SBC	SD

Title:

Consultancy Services for Survey, Design and EIA works of Water Supply and Sewerage Facilities in 5 islands, Maldives - Package 6

Sub Title:

Water Supply System in Ga. Nilandhoo

Client:

Ministry of National Planning, Housing and Infrastructure, Republic of Maldives

EPOCH Associates Pvt. Ltd.
T: +960 333 3528
E: info@epoch.associates
W: wwww.epoch.associates
A: G. Rosary West,
Husnuheenaa Magu, Male', Maldives

FEEDBACK INFRA
Working Infrastructure Happier

Drawn: F.I.A.	Checked: M.S.S.
Designed: F.I.A.	Approved: I.W.
Date: Aug 2020	SCALE (A3): 1:20
Project No: EP- WS/2019/06	
Rev: **R-01**	Page: **W-21**

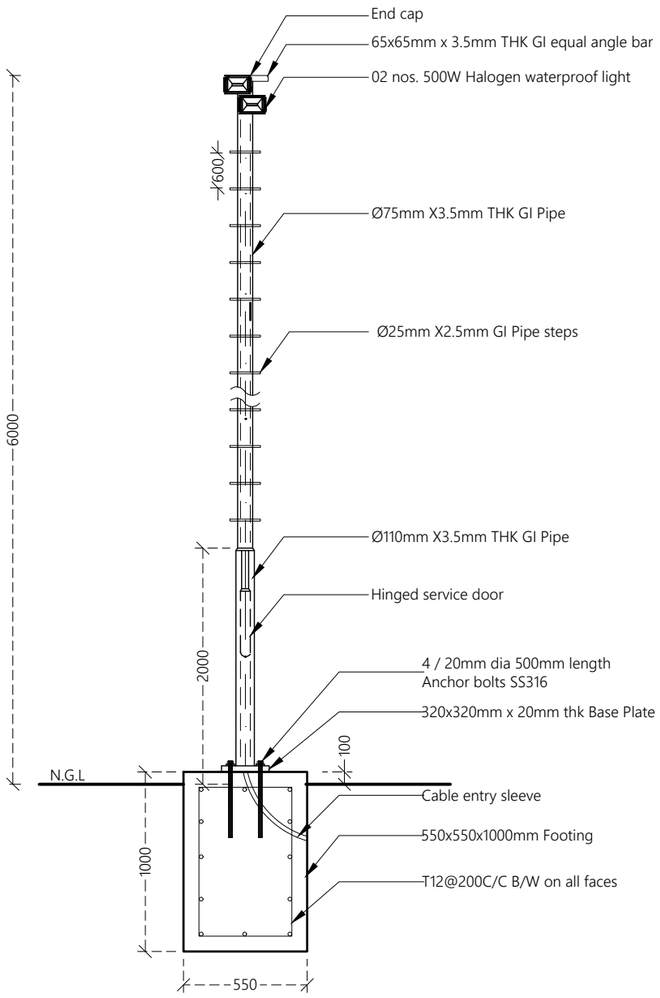

LIGHT POST DETAILS FOR STP COMPOUND (LP1)

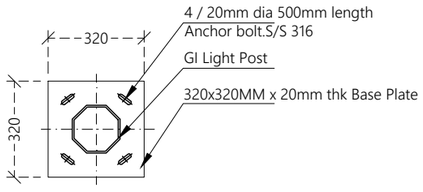

BASE PLATE (LP1)

NOTE:
- CONCRETE COVER :50mm
- All steel members and GI SHS to be applied with 2 coats of anti-corrosive paint with epoxy finishing paint

LIGHT POST DETAILS

NTS

N

Legend

Notes:

- The contractor to undertake a detailed inspection of the outfall site to assess the profile and condition of the reef below sea level and to prepare his methodology for installation and fixing.

REV. NO.	Date	Revision Description	Drawn	Chkd	Appd.
R00	JUNE 2020	STAGE -1	PD	SBC	SD

Title:
Consultancy Services for Survey, Design and EIA works of Water Supply and Sewerage Facilities in 5 islands, Maldives - Package 6

Sub Title:
Water Supply System in Ga. Nilandhoo

Client:
Ministry of National Planning, Housing and Infrastructure, Republic of Maldives

EPOCH ASSOCIATES
T: +960 333 3528
E: info@epoch.associates
W: wwww.epoch.associates
A: G. Rosary West,
Husnuheenaa Magu, Male', Maldives

FEEDBACK INFRA
Walking Infrastructure Happier

Drawn: F.I.A.	Checked: M.S.S.
Designed: F.I.A.	Approved: I.W.
Date: Aug 2020	SCALE (A3): 1:20
Project No: EP- WS/2019/06	
Rev: R-01	Page: W-22

ARCHITECTURAL AND STRUCTURAL DRAWINGS OF

PROPOSED SINGLE STOREY BUILDING AT

RO PLANT ADMIN BUILDING & VEHICLE SHED, GA.NILANDHOO

For Ministry of National Planning, Housing and Infrastructure

CONTENTS

Location Plan	A.1 (1)
Site Plan	A.1 (2)
ARCHITECTURAL DRAWINGS (ADMIN BUILDING)	
Ground Floor Plan	A.2 (1)
Roof Plan	A.2 (2)
Elevations	A.3 (1)
Section	A.4 (1)
Doors & Windows Schedule -1	A.5 (1)
Doors & Windows Schedule -2	A.5 (2)
Typical Ground Slab Detail	A.D (1)
Typical Opening Detail	A.D (1)
Typical Wall Construction Detail	A.D (2)
Boundary Wall Detail	A.D (3)
Gate details	A.D (4)
STRUCTURAL DRAWINGS (ADMIN BUILDING)	
Column Layout Plan	S.1 (1)
Foundation Plan	S.2 (1)
Roof Beam Plan	S.3 (1)
Roof Truss Plan	S.3 (2)
Roof Framing Plan	S.3 (3)
Structural Details	S.D (1)
Truss Detail TR1	S.D (2)
Detail A	S.D (3)
ARCHITECTURAL DRAWINGS (VEHICLE SHED)	
Ground Floor Plan	A.6 (1)
Roof Plan	A.6 (1)
Elevations	A.6 (2)
Section	A.6 (2)
STRUCTURAL DRAWINGS (VEHICLE SHED)	
Foundation Plan	S.4 (1)
Roof Truss Plan	S.4 (2)
Roof Framing Plan	S.D (4)

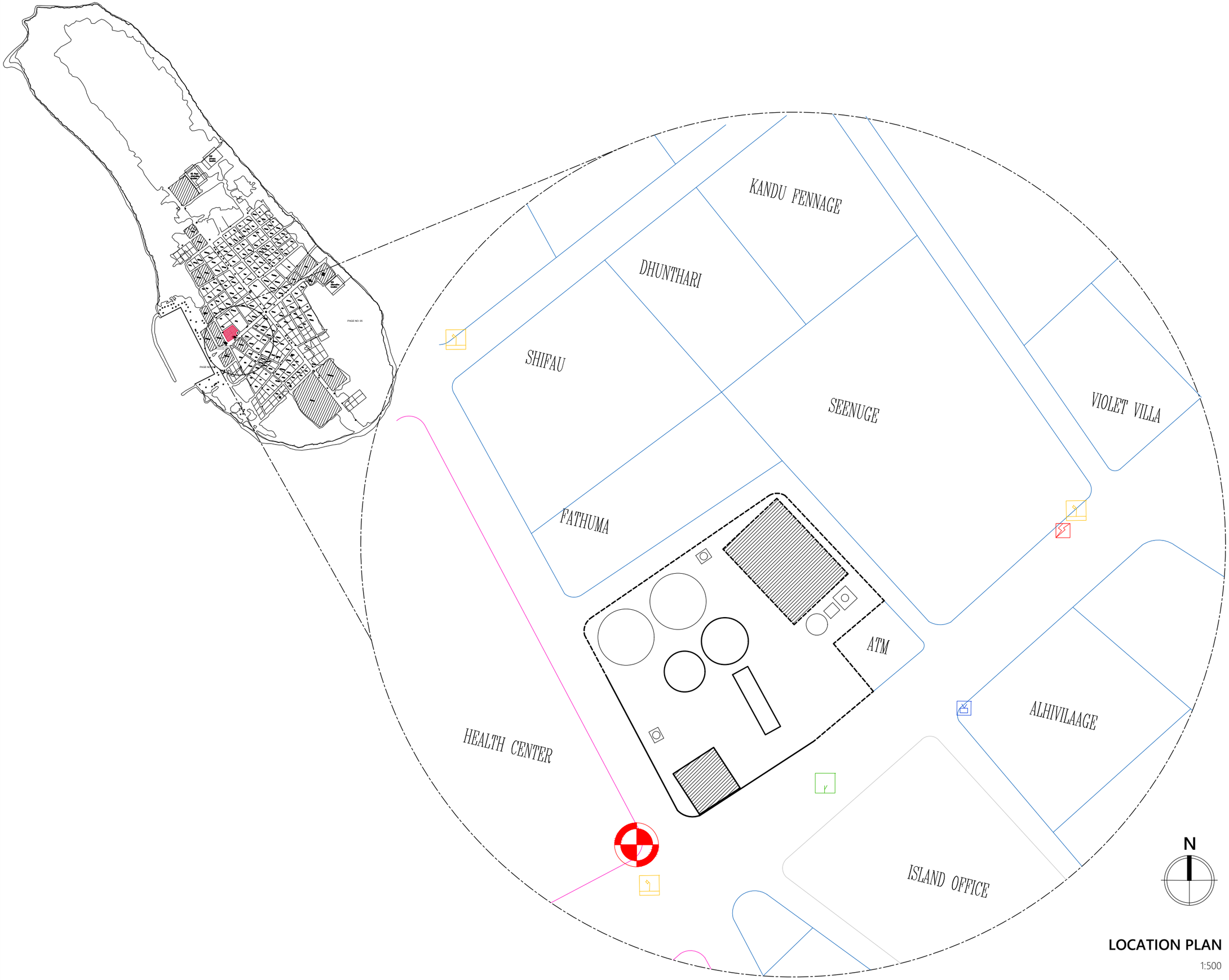

LOCATION PLAN

1:500

Legend

Note:

REV. NO.	Date	Revision Description	Drawn	Chkd	Appd.
R00	AUG 2020	STAGE -1	A.S.A.	F.I.A.	M.H.

Title:
Consultancy Services for Survey, Design and EIA works of Water Supply and Sewerage Facilities in 6 Islands, Maldives – Package 6

Sub Title:
Water Supply System in Ga. Nilandhoo

Client:
Ministry of National Planning, Housing and Infrastructure, Republic of Maldives

EPOCH ASSOCIATES
T: +960 333 3528
E: info@epoch.associates
W: www.epoch.associates
A: G. Rosary West, Husnuheenaa Magu, Male', Maldives

FEEDBACK INFRA
Working Infrastructure Happy

Drawn: A.S.A.	Checked: F.I.A.
Designed: A.S.A.	Approved: M.H.
Date: Aug 2020	SCALE (A3): 1:500
Project No: EP-WS/2019/06	
Rev: R-00	Page: A.1 (1)

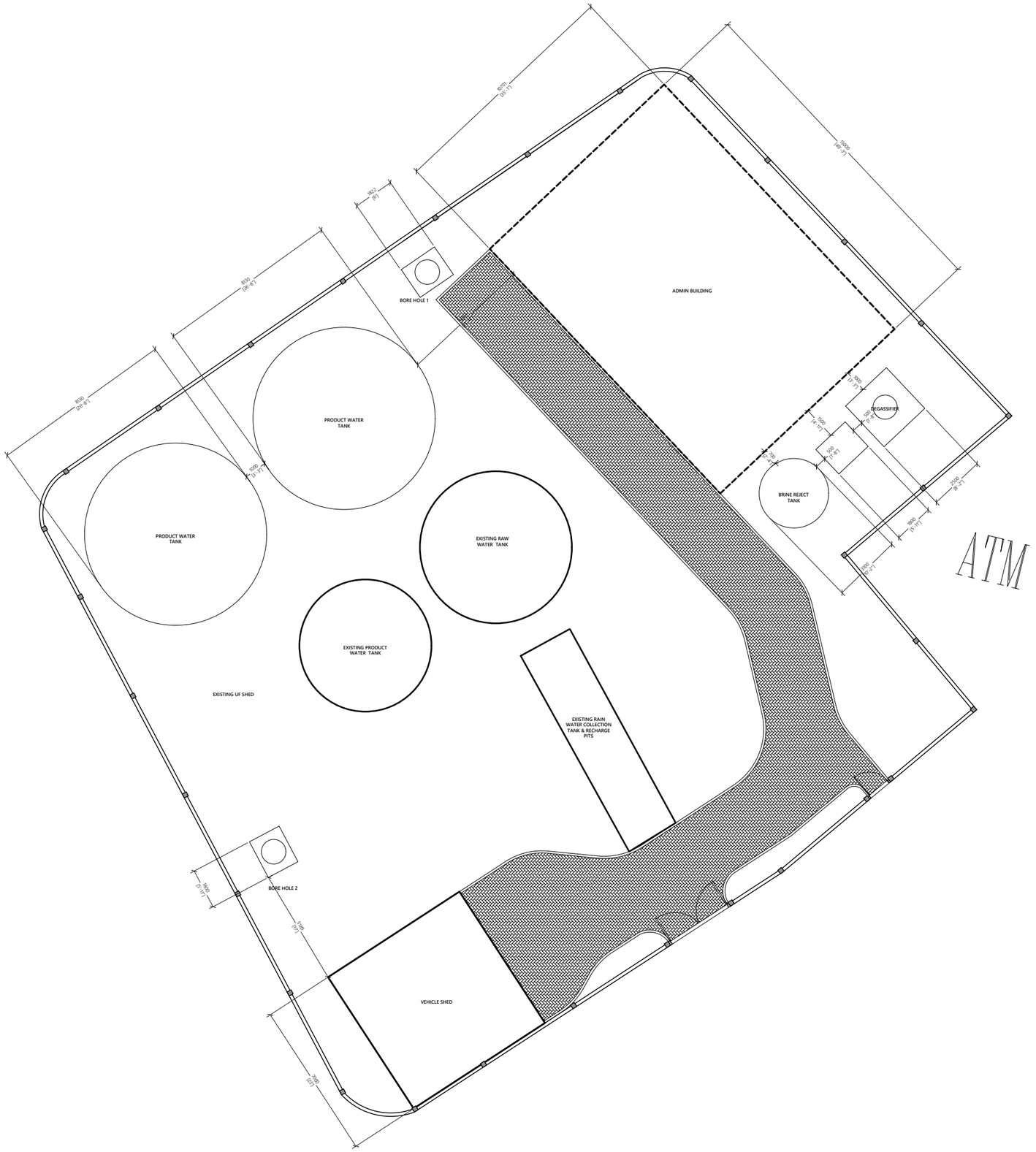

N

SITE PLAN

1:200

Legend

Note:

REV. NO.	Date	Revision Description	Drawn	Chkd	Appd.
R00	AUG 2020	STAGE -1	A.S.A.	F.I.A.	M.H.

Title:

Consultancy Services for Survey, Design and EIA works of Water Supply and Sewerage Facilities in 6 Islands, Maldives – Package 6

Sub Title:

Water Supply System in Ga. Nilandhoo

Client:

Ministry of National Planning, Housing and Infrastructure, Republic of Maldives

EPOCH ASSOCIATES

T: +960 333 3528
E: info@epoch.associates
W: www.epoch.associates
A: G. Rosary West,
Husnuheenaa Magu, Male', Maldives

FEEDBACK INFRA

Drawn:	A.S.A.	Checked:	F.I.A.
Designed:	A.S.A.	Approved:	M.H.
Date:	Aug 2020	SCALE (A3):	1:200

Project No: EP-WS/2019/06

Rev: **R-00**

Page: **A.1 (3)**

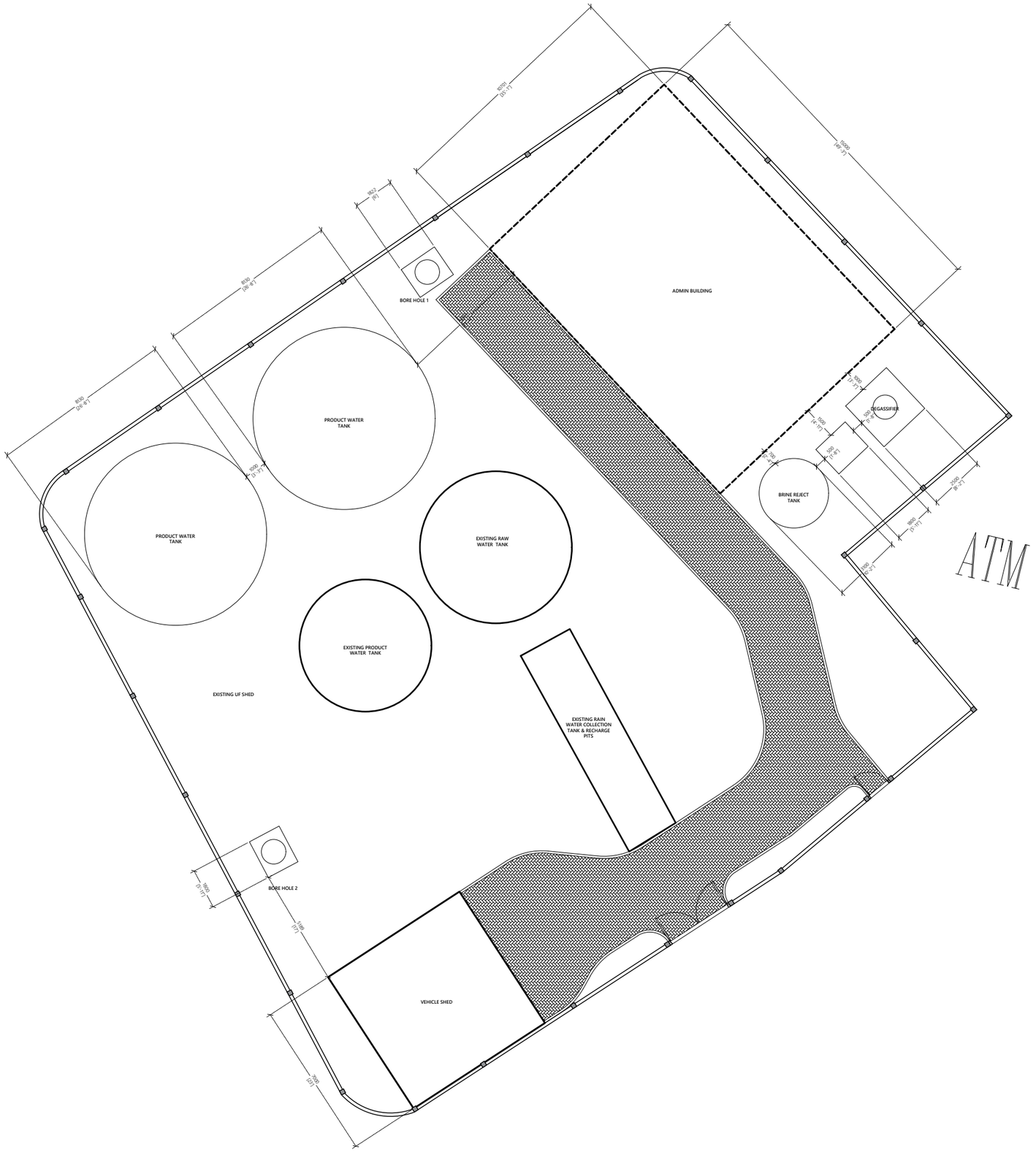

N

SITE PLAN

1:200

Legend

Note:

REV. NO.	Date	Revision Description	Drawn	Chkd	Appd.
R00	AUG 2020	STAGE -1	A.S.A.	F.I.A.	M.H.

Title:

Consultancy Services for Survey, Design and EIA works of Water Supply and Sewerage Facilities in 6 Islands, Maldives – Package 6

Sub Title:

Water Supply System in Ga. Nilandhoo

Client:

Ministry of National Planning, Housing and Infrastructure, Republic of Maldives

EPOCH ASSOCIATES

T: +960 333 3528
E: info@epoch.associates
W: www.epoch.associates
A: G. Rosary West,
Husnuheenaa Magu, Male', Maldives

FEEDBACK INFRA

Drawn:	A.S.A.	Checked:	F.I.A.
Designed:	A.S.A.	Approved:	M.H.
Date:	Aug 2020	SCALE (A3):	1:200

Project No: EP-WS/2019/06

Rev: **R-00**

Page: **A.1 (2)**

ARCHITECTURAL AND STRUCTURAL DRAWINGS OF

PROPOSED SINGLE STOREY BUILDING AT

RO PLANT ADMIN BUILDING, GA.NILANDHOO

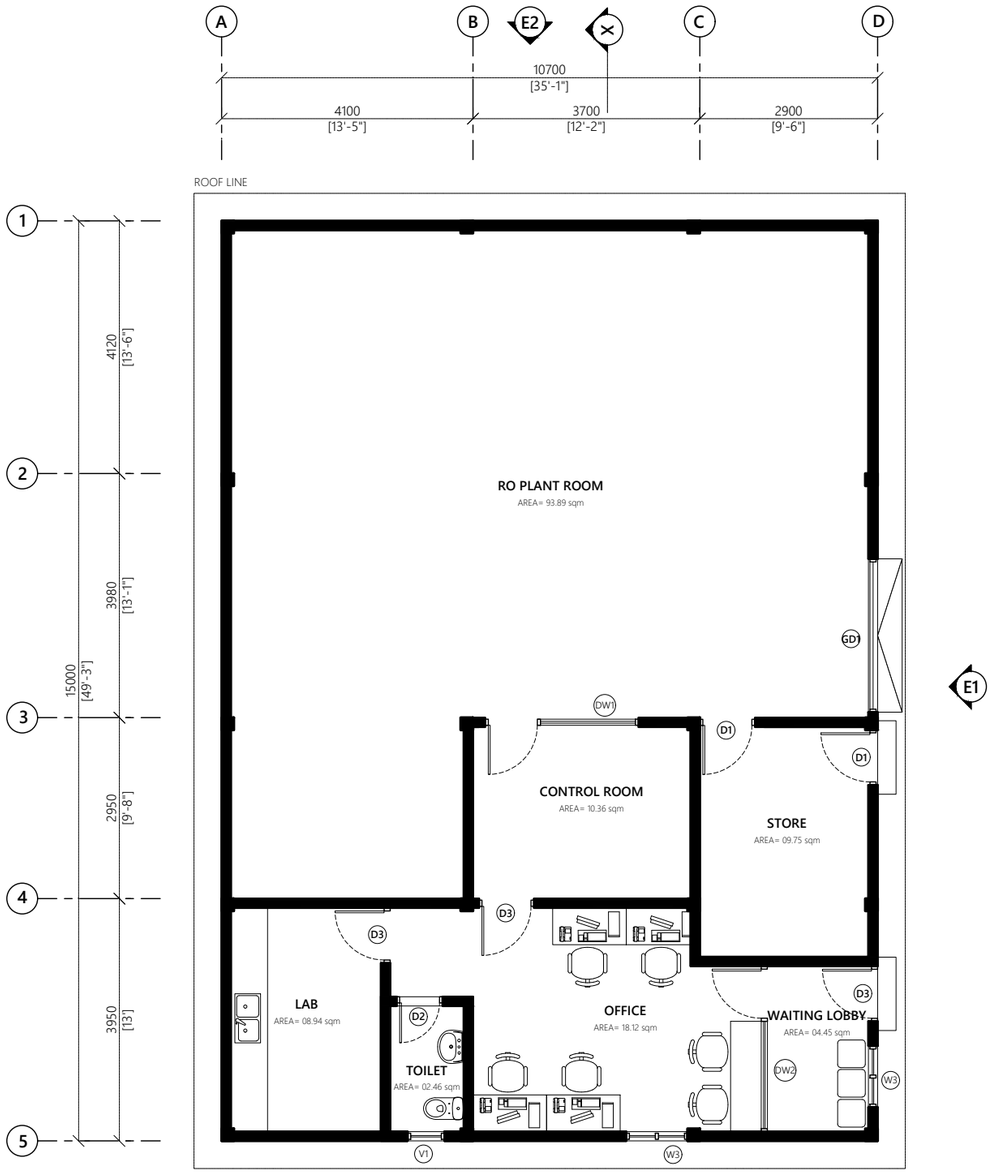

Wall Legend:

150mm thick masonry blocks with 20mm plaster on exterior and 12mm plaster on interior

Wall Finish:

Internal Wall Finish: Easy to wash odour-less Nippon paint Ivory White

External Wall Finish: Weathe rbond Algae guard Nippon September Cream

Toilet and shower walls: 300x300mm ceramic wall lanka tiles up to ceiling height with tile adhesive. use joint filler of appropriate color for grouting joints between tiles

Floor Finish:

Floor Finishes: 600x600mm homogenous floor tiles with tile adhesive unless specified

Toilet Floor Finishes: 300x300mm homogenous non skid floor tiles with tile adhesive unless specified

Notes:

FFL of balconies and toilets should be 25mm lower than the FFL of respective floors

Water proofing to be applied in toilets, balconies and roof terrace prior to tiling

GROUND FLOOR PLAN

1:100

Legend

Note:

R00	AUG 2020	STAGE -1	A.S.A.	F.I.A.	M.H.
REV. NO.	Date	Revision Description	Drawn	Chkd	Appd.

Title:

Consultancy Services for Survey, Design and EIA works of Water Supply and Sewerage Facilities in 6 Islands, Maldives – Package 6

Sub Title:

Water Supply System in Ga. Nilandhoo

Client:

Ministry of National Planning, Housing and Infrastructure, Republic of Maldives

EPOCH ASSOCIATES

T: +960 333 3528
E: info@epoch.associates
W: www.epoch.associates
A: G. Rosary West,
Husnuheenaa Magu, Male', Maldives

FEDBACK INFRA
Wasfung Sufrastrucure Klappen

Drawn:	A.S.A.	Checked:	F.I.A.
Designed:	A.S.A.	Approved:	M.H.
Date:	Aug 2020	SCALE (A3):	1:100
Project No:	EP-WS/2019/06		
Rev: R-00		Page:	A.2 (1)

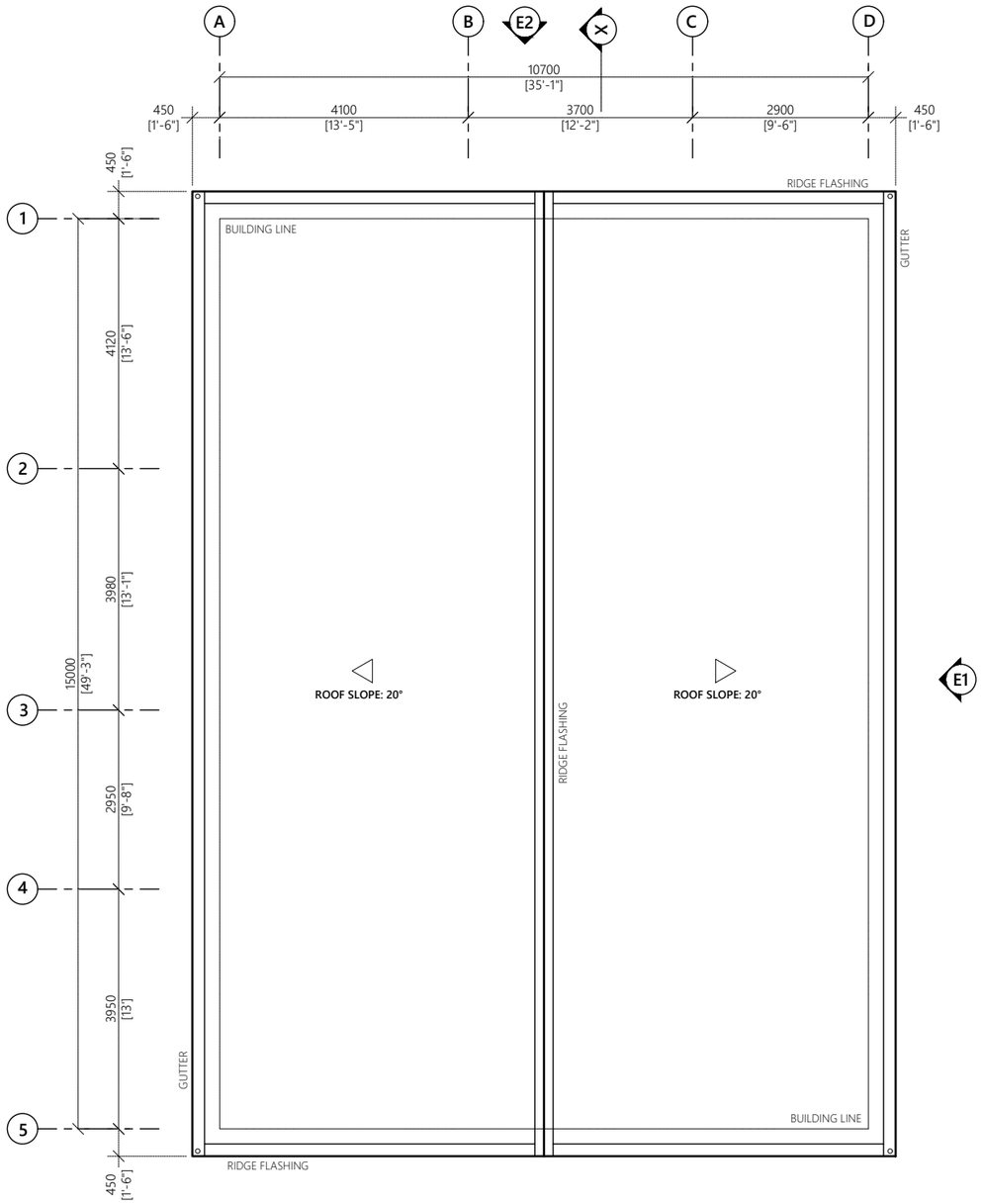

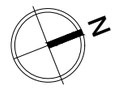

ROOF PLAN

1:100

Legend

Note:

REV. NO.	Date	Revision Description	Drawn	Chkd	Appd.
R00	AUG 2020	STAGE -1	A.S.A.	F.I.A.	M.H.

Title:

Consultancy Services for Survey, Design and EIA works of Water Supply and Sewerage Facilities in 6 Islands, Maldives – Package 6

Sub Title:

Water Supply System in Ga. Nilandhoo

Client:

Ministry of National Planning, Housing and Infrastructure, Republic of Maldives

EPOCH ASSOCIATES

T: +960 333 3528
E: info@epoch.associates
W: www.epoch.associates
A: G. Rosary West,
Husnuheenaa Magu, Male', Maldives

FEEDBACK INFRA
Making Infrastructure Happen

Drawn:	A.S.A.	Checked:	F.I.A.
Designed:	A.S.A.	Approved:	M.H.
Date:	Aug 2020	SCALE (A3):	1:100

Project No: EP-WS/2019/06

Rev: **R-00**

Page: **A.2 (2)**

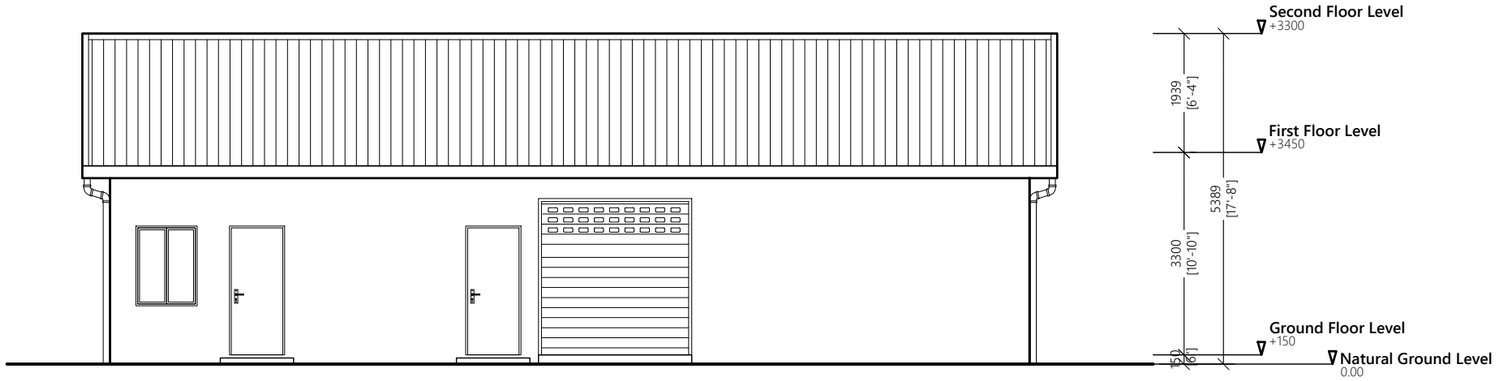

ELEVATION E1

1:100

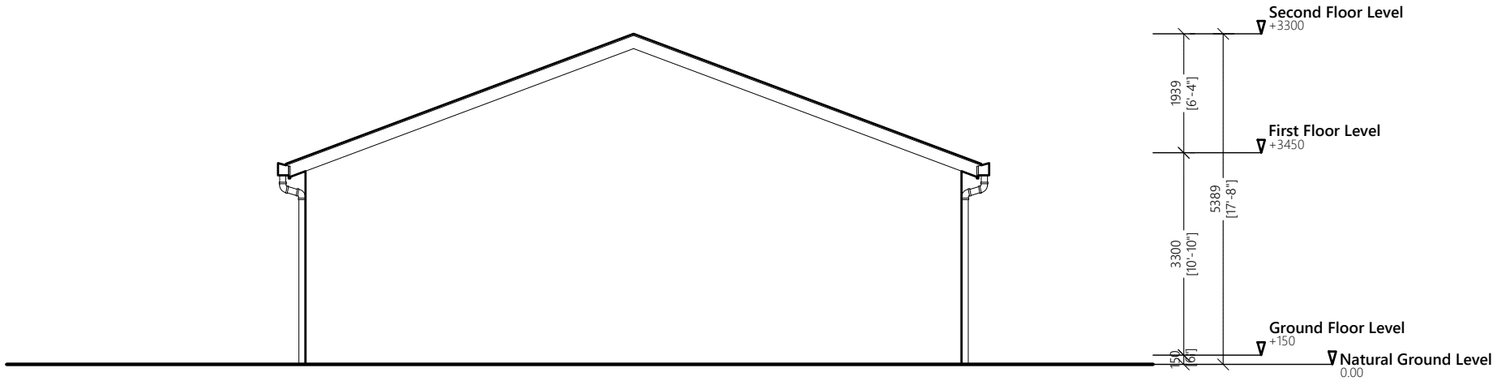

ELEVATION E2

1:100

ELEVATIONS

1:100

Legend

Note:

REV. NO.	Date	Revision Description	Drawn	Chkd	Appd.
R00	AUG 2020	STAGE -1	A.S.A.	F.I.A.	M.H.

Title:
Consultancy Services for Survey, Design and EIA works of Water Supply and Sewerage Facilities in 6 Islands, Maldives – Package 6

Sub Title:
Water Supply System in Ga. Nilandhoo

Client:
Ministry of National Planning, Housing and Infrastructure, Republic of Maldives

EPOCH ASSOCIATES
T: +960 333 3528
E: info@epoch.associates
W: www.epoch.associates
A: G. Rosary West,
Husnuheenaa Magu, Male', Maldives

FEEDBACK INFRA
Working Infrastructure Happy

Drawn:	A.S.A.	Checked:	F.I.A.
Designed:	A.S.A.	Approved:	M.H.
Date:	Aug 2020	SCALE (A3):	1:100
Project No:	EP-WS/2019/06		
Rev: R-00		Page:	A.3 (1)

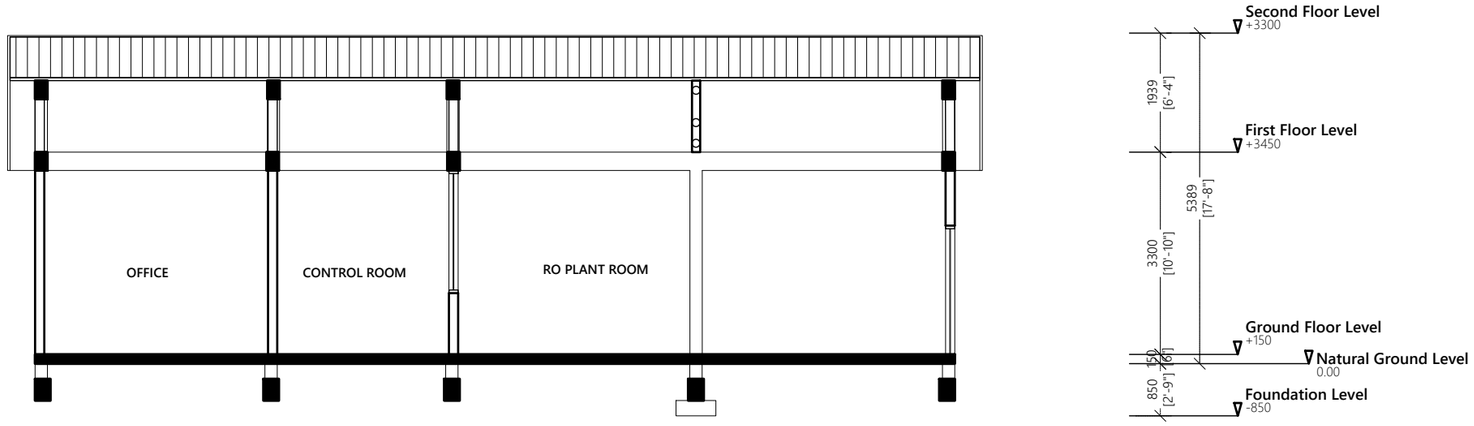

SECTION XX

1:100

SECTION

1:100

Legend

Note:

R00	AUG 2020	STAGE -1	A.S.A.	F.I.A.	M.H.
REV. NO.	Date	Revision Description	Drawn	Chkd	Appd.

Title:

Consultancy Services for Survey, Design and EIA works of Water Supply and Sewerage Facilities in 6 Islands, Maldives – Package 6

Sub Title:

Water Supply System in Ga. Nilandhoo

Client:

Ministry of National Planning, Housing and Infrastructure, Republic of Maldives

EPOCH ASSOCIATES
T: +960 333 3528
E: info@epoch.associates
W: wwww.epoch.associates
A: G. Rosary West,
Husnuheenaa Magu, Male', Maldives

FEEDBACK INFRA
Walking the Infrastructure Happiness

Drawn: A.S.A.	Checked: F.I.A.
Designed: A.S.A.	Approved: M.H.
Date: Aug 2020	SCALE (A3): 1:100
Project No: EP-WS/2019/06	
Rev: R-00	Page: A.4(1)

Door ID	D1	D2	D3	GD1
Plan view	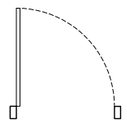	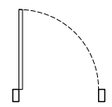	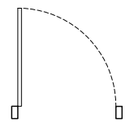	
Elevation view	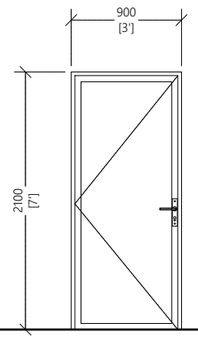	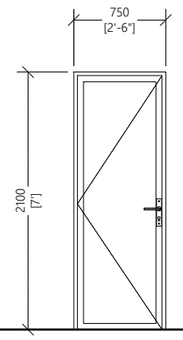	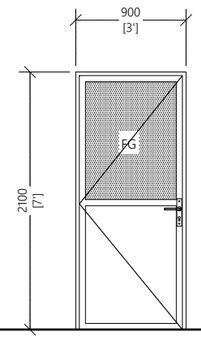	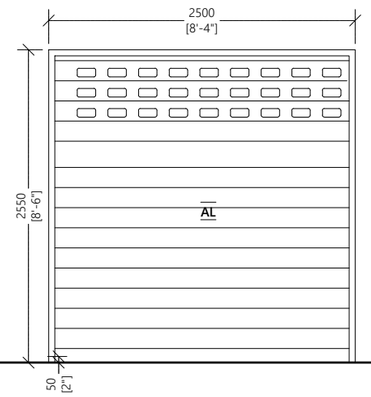
Frame material	Aluminum black powder coated	Aluminum black powder coated	Aluminum black powder coated	Aluminum framed roller shutter
Panel material	Aluminum cladding sheet	Aluminum cladding sheet	Aluminum cladding sheet & Fixed clear glass	Aluminium
Openable area	1.74	1.45	1.74	6.0

General Notes:

Dimensions shown on DWG indicate effective openings of frame

All frame depths are 100mm
All dor panel thicknesses are 35mm
All window manel thickness are 25mm
Al frame edges shal be trimmed 3mm

All wodden components should be wood stained finish

All glazing should be of 6mm unless specified

External units must comply the following weather conditions:-
Wind pressure: 200 kg/sqm
Water tightness: 25 kg/sqm

All external frames / wall joints must be sealed with silicon sealant and the wedges trimmed with 12X12mm hardwood beading fixed to frames by brass nails

All hardware should be provided for the performance of al functions of the units

Hinges shall confirm to
1. Door size more than 700X1900mm
   WD: 125mm X2 sets
   SD: 150mm X3 sets
2. Door size less than 700X1900mm
   WD: 100mm X2 sets
   SD: 125mm X2 sets

Locks shall be cylinderical with master key sets

Door knobs shall be1000mm above FFL

DOOR & WINDOW SCHEDULE -1

1:50

Legend

Note:

REV. NO.	Date	Revision Description	Drawn	Chkd	Appd.
R00	AUG 2020	STAGE -1	A.S.A.	F.I.A.	M.H.

Title:
Consultancy Services for Survey, Design and EIA works of Water Supply and Sewerage Facilities in 6 Islands, Maldives – Package 6

Sub Title:
Water Supply System in Ga. Nilandhoo

Client:
Ministry of National Planning, Housing and Infrastructure, Republic of Maldives

T: +960 333 3528
E: info@epoch.associates
W: www.epoch.associates
A: G. Rosary West, Husnuheenaa Magu, Male', Maldives

Drawn:	A.S.A.	Checked:	F.I.A.
Designed:	A.S.A.	Approved:	M.H.
Date:	Aug 2020	SCALE (A3):	1:50

Project No: EP-WS/2019/06

Rev: **R-00**

Page: **A.5 (1)**

Door ID	DW 1	DW 2	W2
Plan view	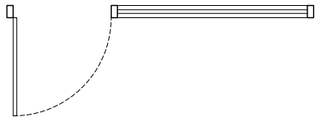	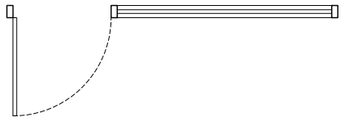	
Elevation view	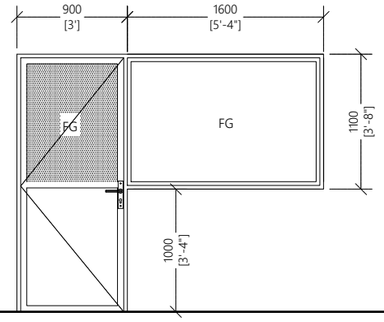	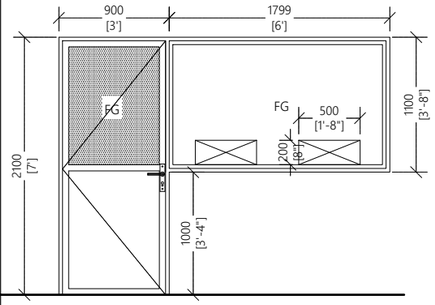	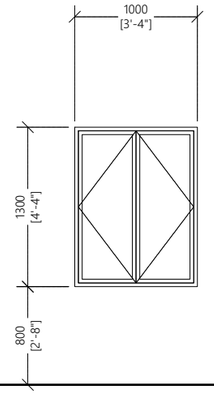
Frame material	Aluminum black powder coated	Aluminum black powder coated	Aluminum black powder coated
Panel material	Aluminum cladding sheet & Fixed clear glass	Aluminum cladding sheet & Fixed clear glass	Reflective Glass
Openable area	-	-	-

Door ID	V1
Plan view	
Elevation view	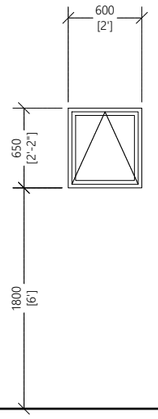
Frame material	Aluminum black powder coated
Panel material	Reflective Glass
Openable area	0.32

General Notes:

Dimensions shown on DWG indicate effective openings of frame

All frame depths are 100mm
All dor panel thicknesses are 35mm
All window manel thickness are 25mm
Al frame edges shal be trimmed 3mm

All wodden components should be wood stained finish

All glazing should be of 6mm unless specified

External units must comply the following weather conditions:-
Wind pressure: 200 kg/sqm
Water tightness: 25 kg/sqm

All external frames / wall joints must be sealed with silicon sealant and the wedges trimmed with 12X12mm hardwood beading fixed to frames by brass nails

All hardware should be provided for the performance of al functions of the units

Hinges shall confirm to
1. Door size more than 700X1900mm
   WD: 125mm X2 sets
   SD: 150mm X3 sets
2. Door size less than 700X1900mm
   WD: 100mm X2 sets
   SD: 125mm X2 sets

Locks shall be cylinderical with master key sets

Door knobs shall be1000mm above FFL

DOOR & WINDOW SCHEDULE -2

1:50

Legend

Note:

REV. NO.	Date	Revision Description	Drawn	Chkd	Appd.
R00	AUG 2020	STAGE -1	A.S.A.	F.I.A.	M.H.

Title:
Consultancy Services for Survey, Design and EIA works of Water Supply and Sewerage Facilities in 6 Islands, Maldives – Package 6
Sub Title:
Water Supply System in Ga. Nilandhoo

Client:
Ministry of National Planning, Housing and Infrastructure, Republic of Maldives

EPOCH ASSOCIATES
T: +960 333 3528
E: info@epoch.associates
W: www.epoch.associates
A: G. Rosary West, Husnuheenaa Magu, Male', Maldives

FEEDBACK INFRA

Drawn: A.S.A. | Checked: F.I.A.
Designed: A.S.A. | Approved: M.H.
Date: Aug 2020 | SCALE (A3): 1:50
Project No: EP-WS/2019/06
Rev: R-00
Page: A.5 (2)

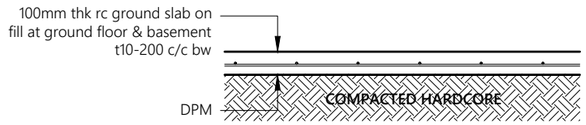

Note:

- All cover blocks shall be casted using grade C25/30 concrete with 5-10mm aggregates
- For slab, rebar spacer chairs spacing shall be minimum 1m spacing or 1 no. per 1 sqm

TYPICAL GROUND SLAB DETAIL

1:20

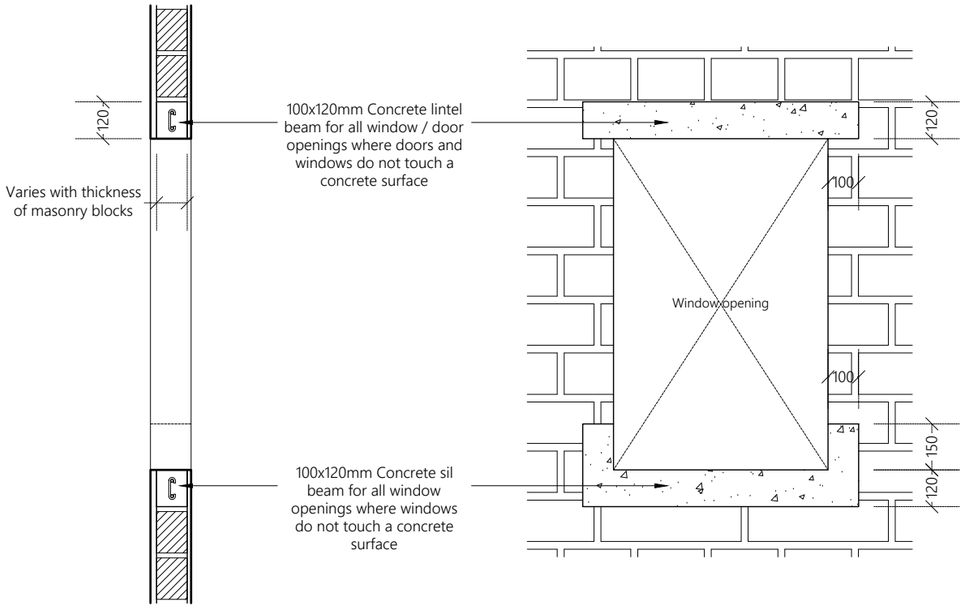

TYPICAL OPENING DETAIL

1:20

Legend

Note:

REV. NO.	Date	Revision Description	Drawn	Chkd	Appd.
R00	AUG 2020	STAGE -1	A.S.A.	F.I.A.	M.H.

Title:
Consultancy Services for Survey, Design and EIA works of Water Supply and Sewerage Facilities in 6 Islands, Maldives – Package 6

Sub Title:
Water Supply System in Ga. Nilandhoo

Client:
Ministry of National Planning, Housing and Infrastructure, Republic of Maldives

EPOCH ASSOCIATES
T: +960 333 3528
E: info@epoch.associates
W: www.epoch.associates
A: G. Rosary West,
Husnuheenaa Magu, Male', Maldives

FEEDBACK INFRA
Working Infrastructure Happiness

Drawn: A.S.A.	Checked: F.I.A.
Designed: A.S.A.	Approved: M.H.
Date: Aug 2020	SCALE (A3): 1:20
Project No: EP-WS/2019/06	
Rev: R-00	Page: A.D (1)

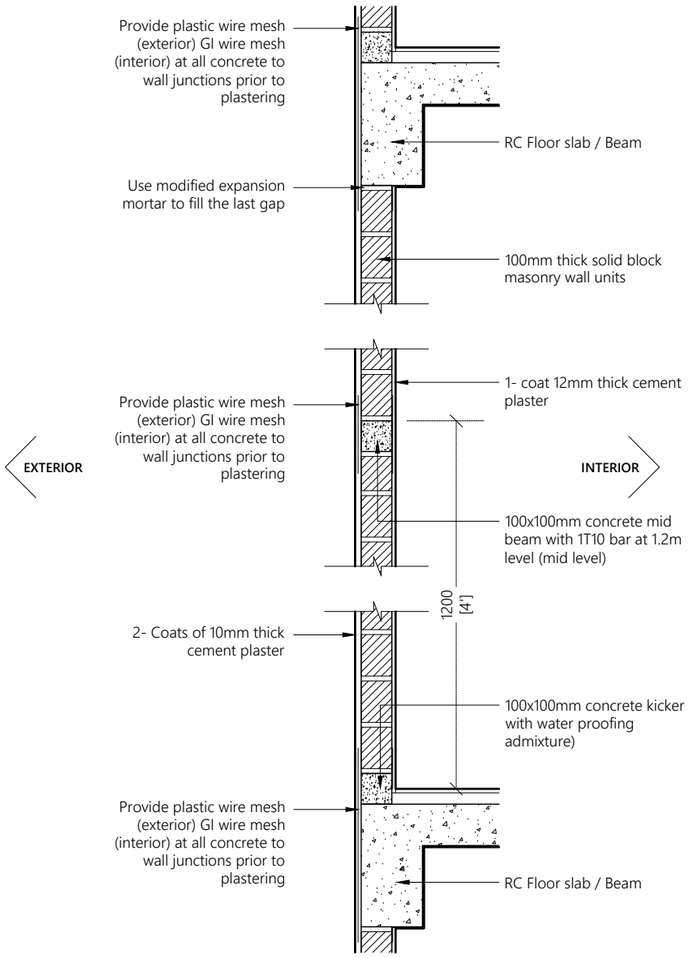

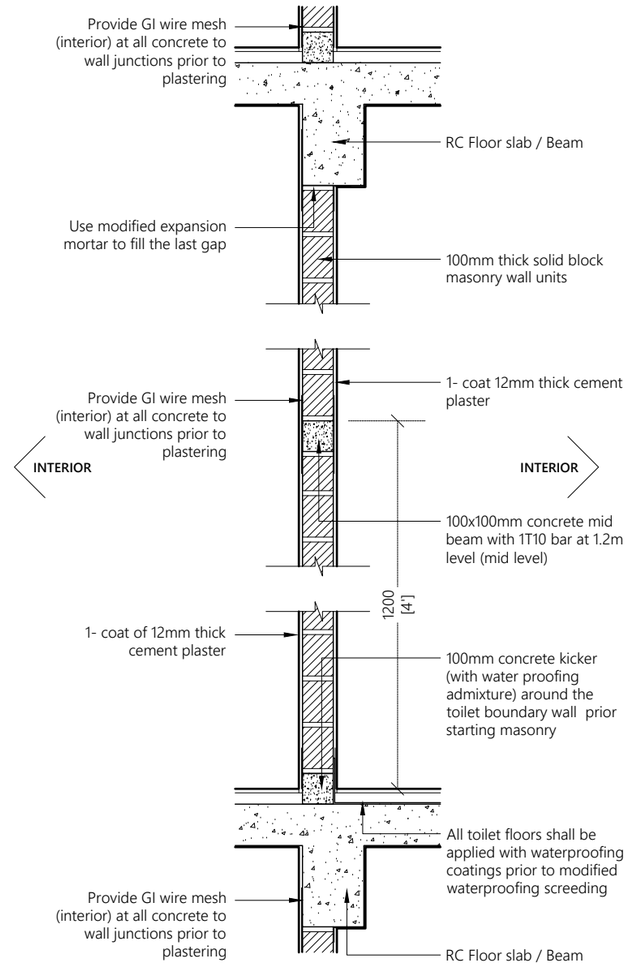

Note:

- Concrete surfaces shall be thoroughly cleaned with water & applied with mastercast 141 or equivalent bonding mortar prior to plastering.
- Plastering mortar mix shall be 1:4 (cement: sand) ratio.
- Plaster mix shall be modified using fibre wool & mastercast 141 or equivalent plasticisers as per manufacturer's specification.
- Height of placing blocks shall be maximum 1.2m per day.
- After initial coat of plastering, water curing shall be provided for minimum 3 days & after final coat water curing shall be provided for 7 days.

TYPICAL WALL CONSTRUCTION DETAIL

1:20

Legend

Note:

REV. NO.	Date	Revision Description	Drawn	Chkd	Appd.
R00	AUG 2020	STAGE -1	A.S.A.	F.I.A.	M.H.

Title:
Consultancy Services for Survey, Design and EIA works of Water Supply and Sewerage Facilities in 6 Islands, Maldives – Package 6

Sub Title:
Water Supply System in Ga. Nilandhoo

Client:
Ministry of National Planning, Housing and Infrastructure, Republic of Maldives

EPOCH Associates
T: +960 333 3528
E: info@epoch.associates
W: www.epoch.associates
A: G. Rosary West, Husnuheenaa Magu, Male', Maldives

FEEDBACK INFRA

Drawn:	A.S.A.	Checked:	F.I.A.
Designed:	A.S.A.	Approved:	M.H.
Date:	Aug 2020	SCALE (A3):	1:20

Project No: EP-WS/2019/06

Rev: **R-00**

Page: **A.D (2)**

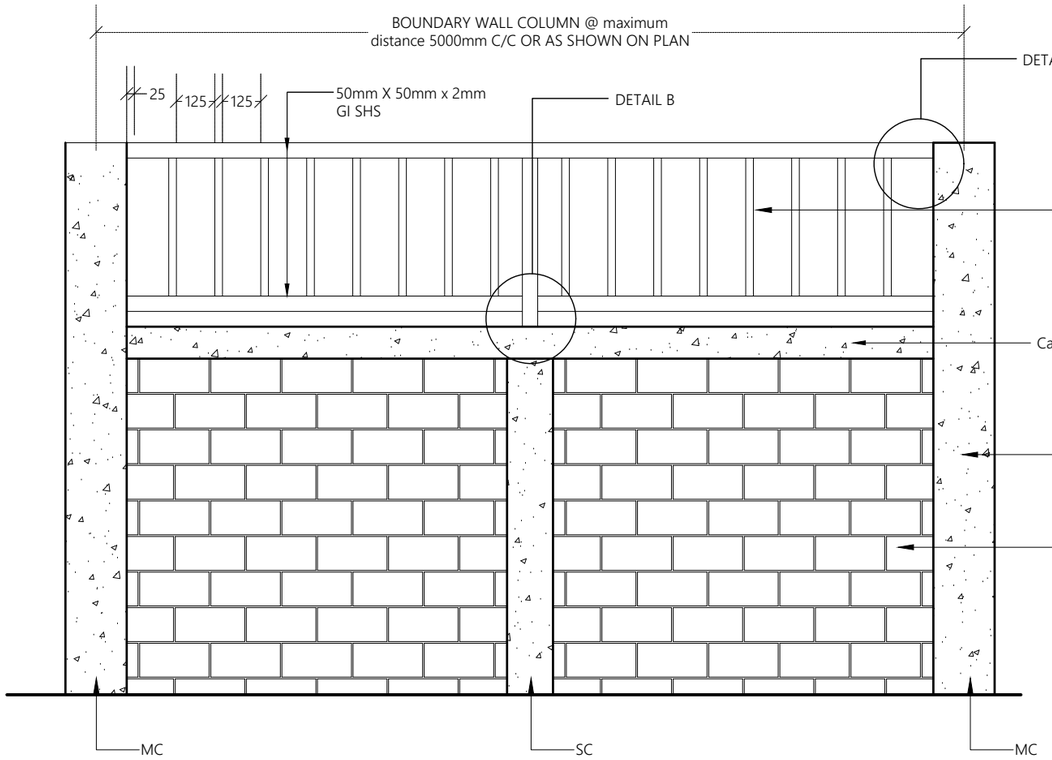

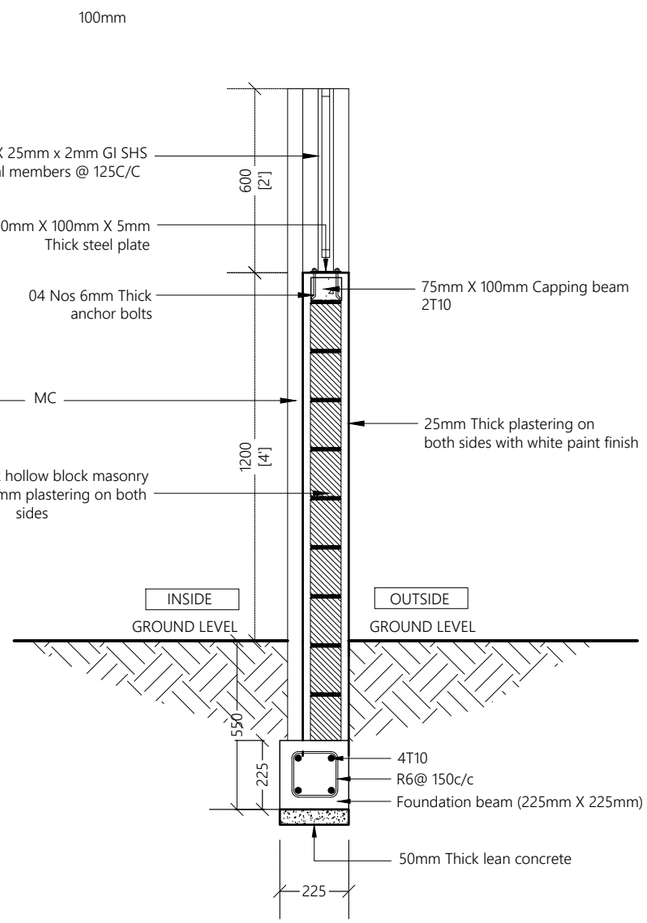

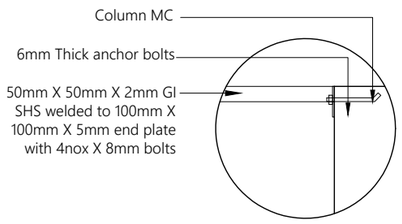

DETAIL A

1:10

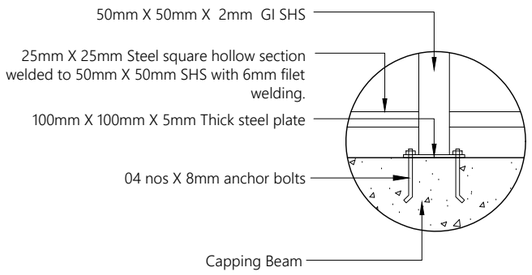

DETAIL B

1:10

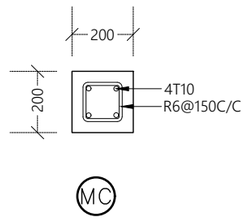

MAIN COLUMN
@ maximum distance 5000mm C/C

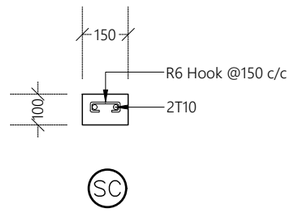

STIFFENER COLUMN
(in between two main columns)

NOTE:
- FRAME MATERIAL : Steel gate frame 2.5mm thick GI sections SHS
- All steel members and GI SHS to be applied with 2 coats of anti-corrosive paint with epoxy finishing paint
- Allowance shall be made to fix pad lock in Gates

BOUNDARY WALL DETAIL

1:20

Legend

Note:

REV. NO.	Date	Revision Description	Drawn	Chkd	Appd.
R00	AUG 2020	STAGE -1	A.S.A.	F.I.A.	M.H.

Title:
Consultancy Services for Survey, Design and EIA works of Water Supply and Sewerage Facilities in 6 Islands, Maldives – Package 6

Sub Title:
Water Supply System in Ga. Nilandhoo

Client:
Ministry of National Planning, Housing and Infrastructure, Republic of Maldives

EPOCH ASSOCIATES
T: +960 333 3528
E: info@epoch.associates
W: wwww.epoch.associates
A: G. Rosary West,
Husnuheenaa Magu, Male', Maldives

FEEDBACK INFRA

Drawn: A.S.A.	Checked: F.I.A.
Designed: A.S.A.	Approved: M.H.
Date: Aug 2020	SCALE (A3): 1:20
Project No: EP-WS/2019/06	
Rev: R-00	Page: A.D (3)

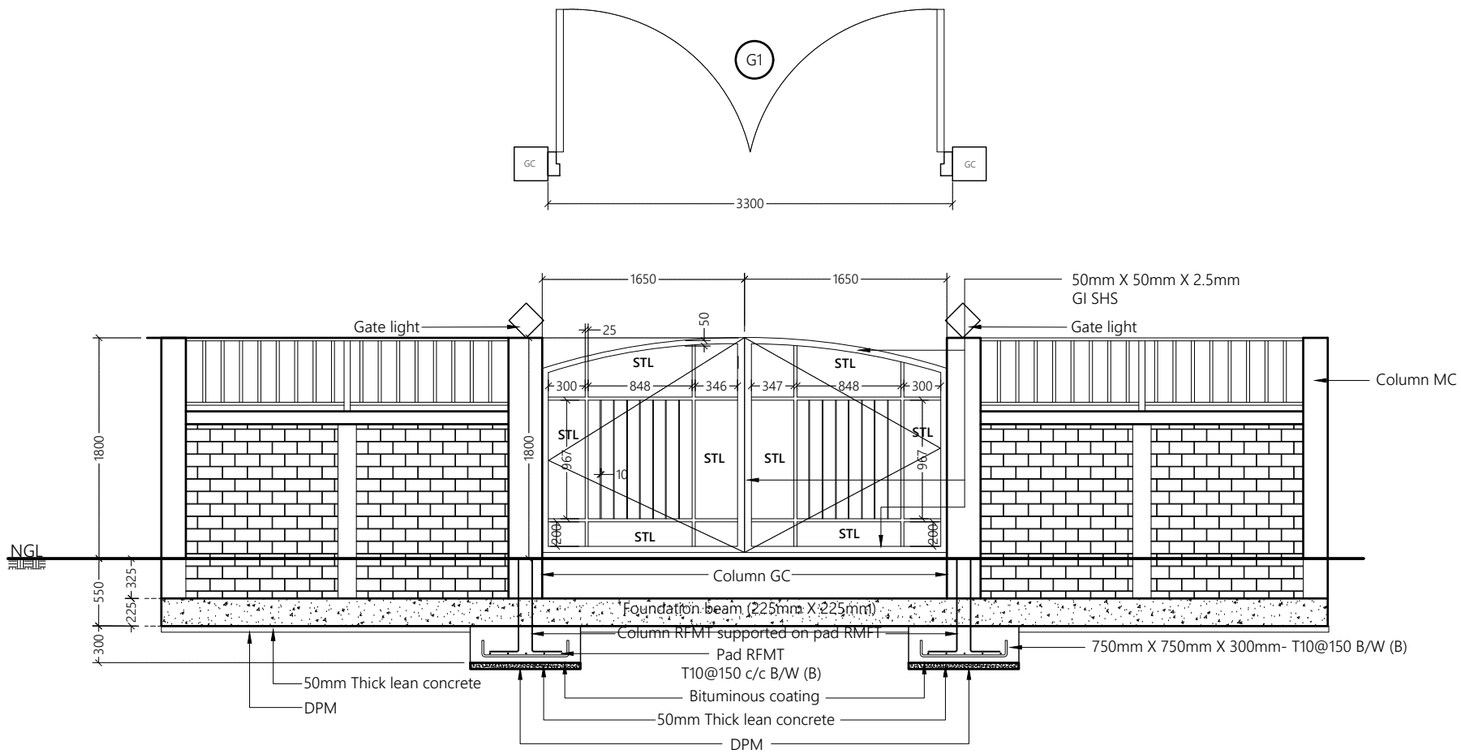

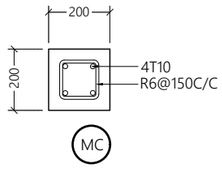

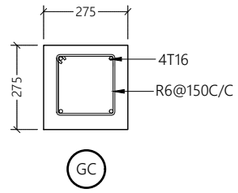

COLUMN DETAILS

1:20

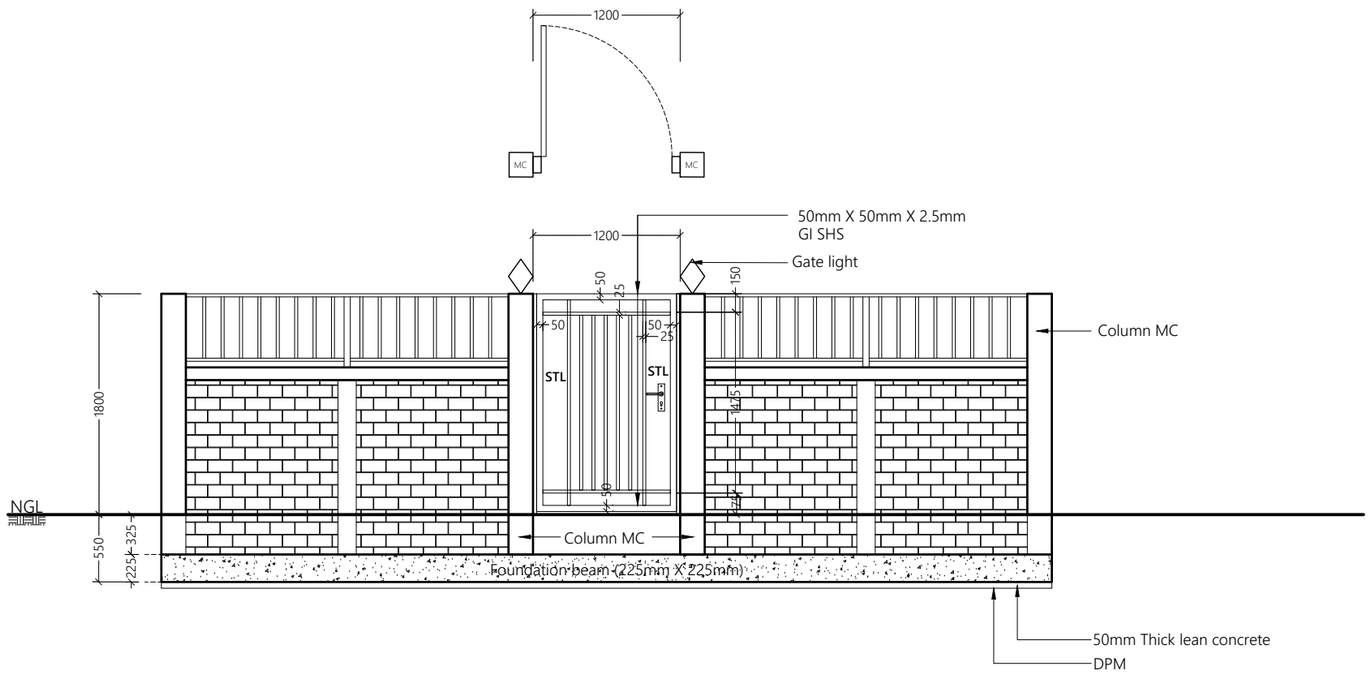

GATE DETAILS

1:50

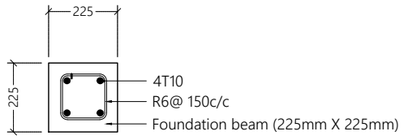

FOUNDATION BEAM DETAIL

1:20

Legend

Note:

REV. NO.	Date	Revision Description	Drawn	Chkd	Appd.
R00	AUG 2020	STAGE -1	A.S.A.	F.I.A.	M.H.

Title:

Consultancy Services for Survey, Design and EIA works of Water Supply and Sewerage Facilities in 6 Islands, Maldives – Package 6

Sub Title:

Water Supply System in Ga. Nilandhoo

Client:

Ministry of National Planning, Housing and Infrastructure, Republic of Maldives

EPOCH ASSOCIATES

T: +960 333 3528
E: info@epoch.associates
W: www.epoch.associates
A: G. Rosary West, Husnuheenaa Magu, Male', Maldives

FEEDBACK INFRA

Drawn: A.S.A.	Checked: F.I.A.
Designed: A.S.A.	Approved: M.H.
Date: Aug 2020	SCALE (A3): 1:20

Project No: EP-WS/2019/06

Rev: R-00

Page: A.D (4)

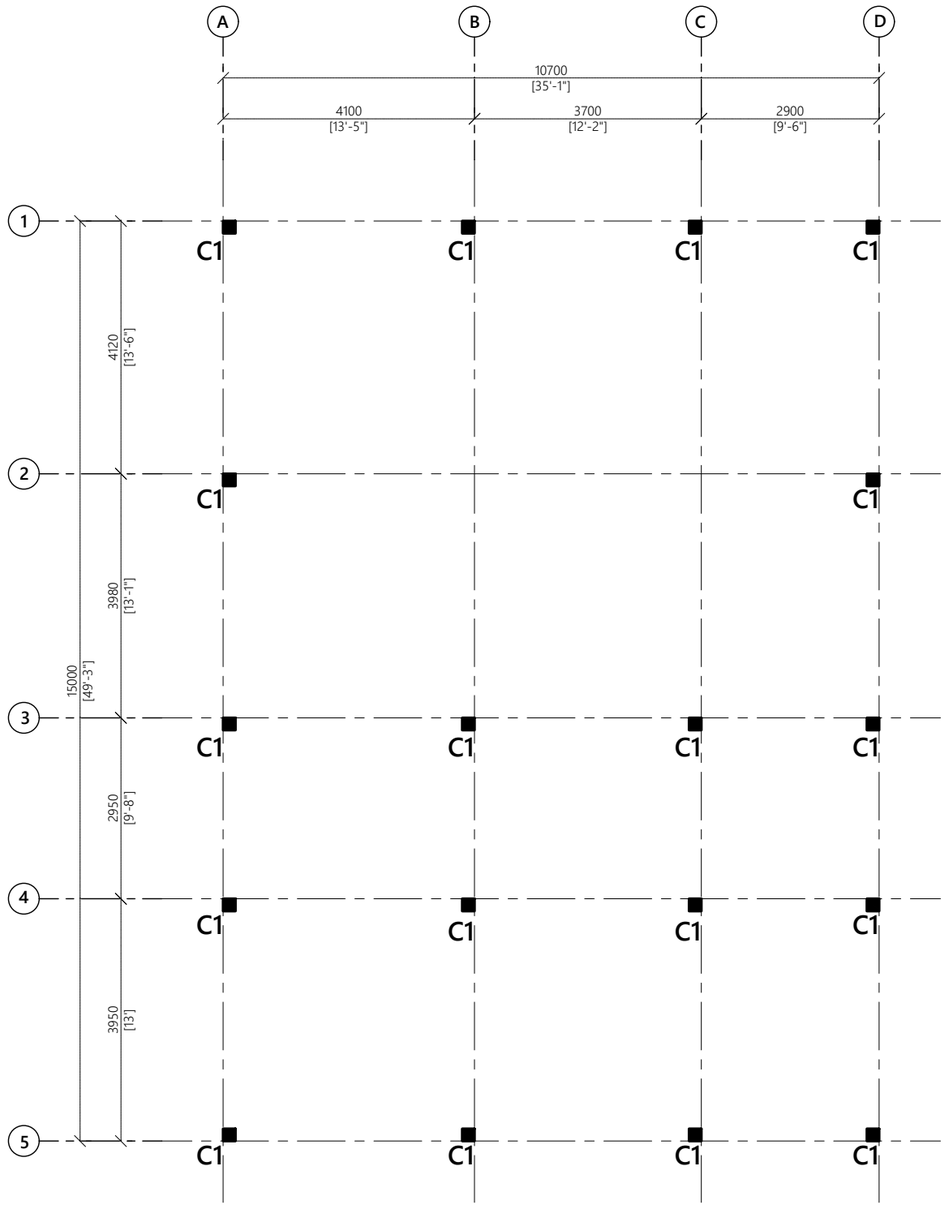

COLUMN LAYOUT PLAN

1:100

Legend

Note:

REV. NO.	Date	Revision Description	Drawn	Chkd	Appd.
R00	AUG 2020	STAGE -1	A.S.A.	F.I.A.	M.H.

Title:

Consultancy Services for Survey, Design and EIA works of Water Supply and Sewerage Facilities in 6 Islands, Maldives – Package 6

Sub Title:

Water Supply System in Ga. Nilandhoo

Client:

Ministry of National Planning, Housing and Infrastructure, Republic of Maldives

EPOCH ASSOCIATES
T: +960 333 3528
E: info@epoch.associates
W: www.epoch.associates
A: G. Rosary West,
Husnuheenaa Magu, Male', Maldives

FEEDBACK INFRA

Drawn:	A.S.A.	Checked:	F.I.A.
Designed:	A.S.A.	Approved:	M.H.
Date:	Aug 2020	SCALE (A3):	1:100

Project No: EP-WS/2019/06

Rev: **R-00**

Page: **S.1 (1)**

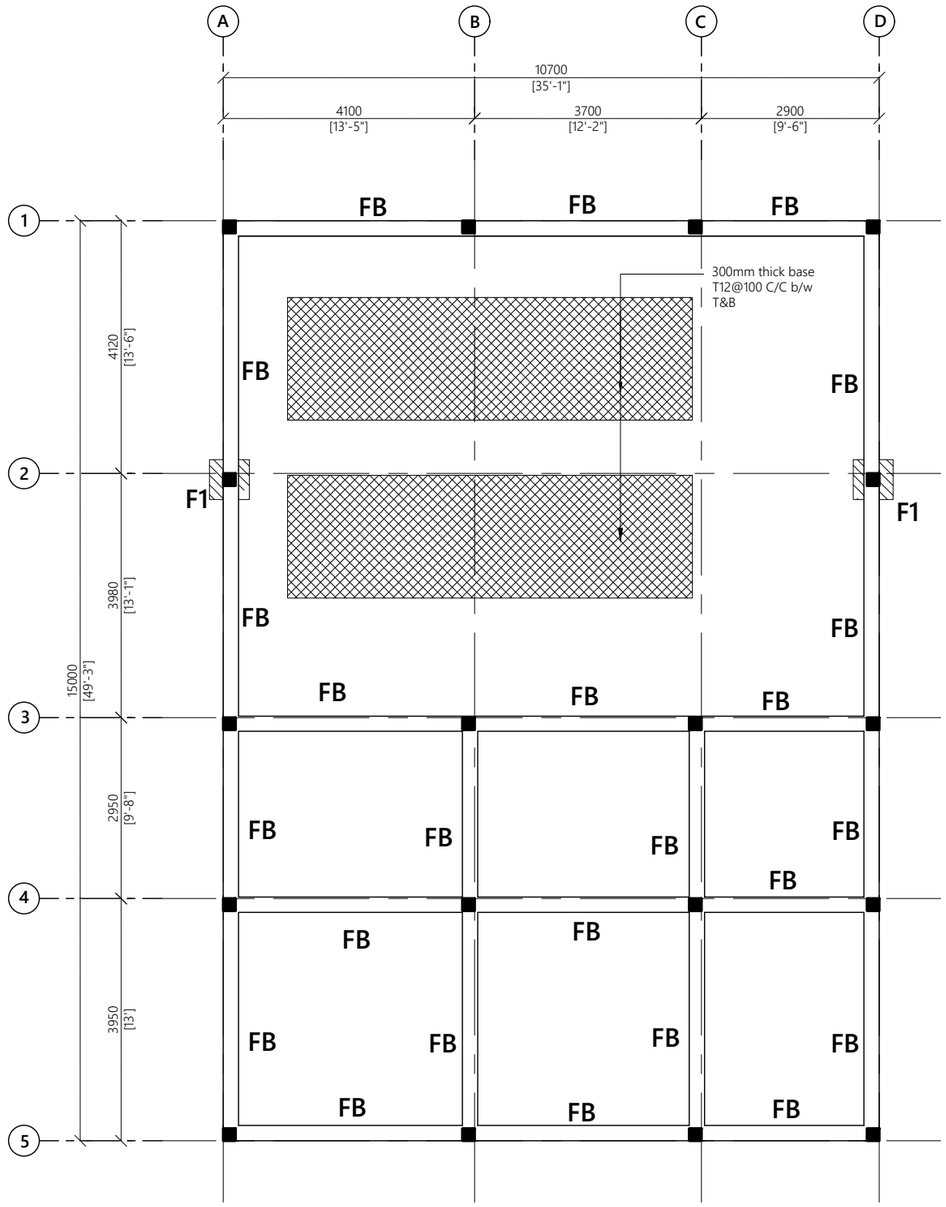

Notes:

Foundation Depth: 600mm

FOUNDATION PLAN

1:100

Legend

Note:

REV. NO.	Date	Revision Description	Drawn	Chkd	Appd.
R00	AUG 2020	STAGE -1	A.S.A.	F.I.A.	M.H.

Title:

Consultancy Services for Survey, Design and EIA works of Water Supply and Sewerage Facilities in 6 Islands, Maldives – Package 6

Sub Title:

Water Supply System in Ga. Nilandhoo

Client:

Ministry of National Planning, Housing and Infrastructure, Republic of Maldives

EPOCH ASSOCIATES

T: +960 333 3528
E: info@epoch.associates
W: www.epoch.associates
A: G. Rosary West, Husnuheenaa Magu, Male', Maldives

FEEDBACK INFRA

Drawn:	A.S.A.	Checked:	F.I.A.
Designed:	A.S.A.	Approved:	M.H.
Date:	Aug 2020	SCALE (A3):	1:100

Project No: EP-WS/2019/06

Rev: **R-00**

Page: **S.2 (1)**

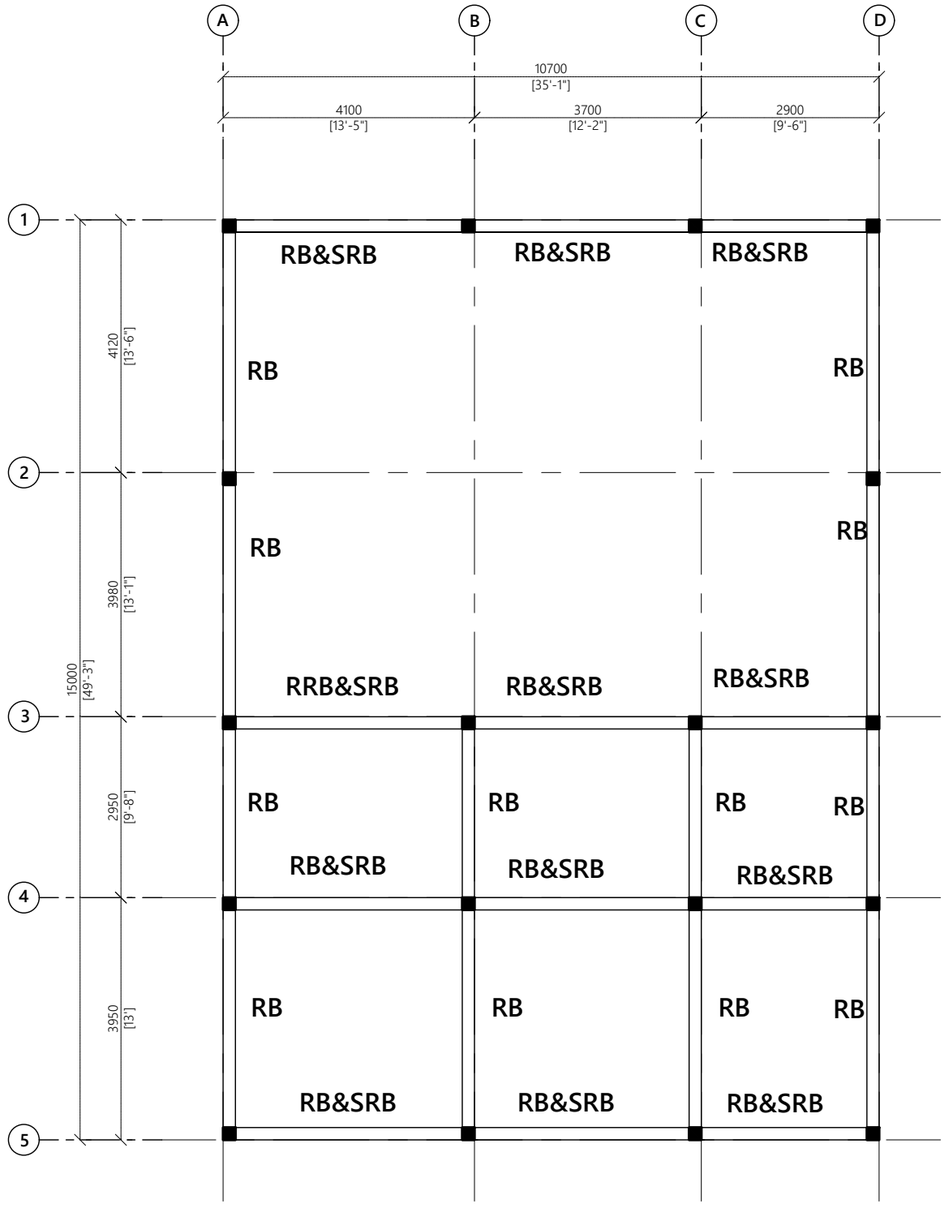

ROOF BEAM PLAN

1:100

Legend

Note:

REV. NO.	Date	Revision Description	Drawn	Chkd	Appd.
R00	AUG 2020	STAGE -1	A.S.A.	F.I.A.	M.H.

Title:

Consultancy Services for Survey, Design and EIA works of Water Supply and Sewerage Facilities in 6 Islands, Maldives – Package 6

Sub Title:

Water Supply System in Ga. Nilandhoo

Client:

Ministry of National Planning, Housing and Infrastructure, Republic of Maldives

EPOCH ASSOCIATES
T: +960 333 3528
E: info@epoch.associates
W: wwww.epoch.associates
A: G. Rosary West,
Husnuheenaa Magu, Male', Maldives

FEEDBACK INFRA

Drawn: A.S.A.	Checked: F.I.A.
Designed: A.S.A.	Approved: M.H.
Date: Aug 2020	SCALE (A3): 1:100
Project No: EP-WS/2019/06	
Rev: R-00	Page: S.3 (1)

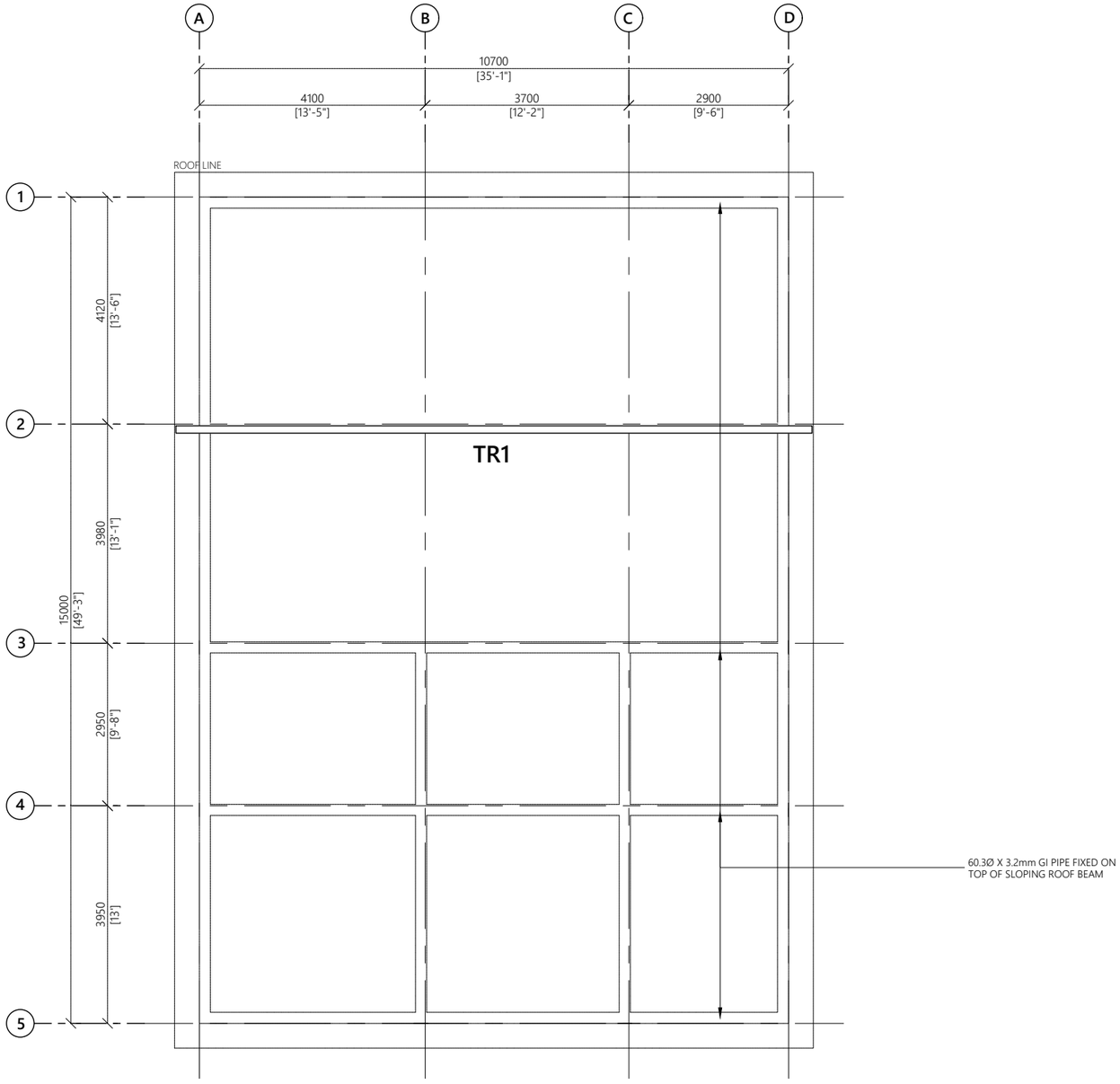

ROOF TRUSS PLAN

1:100

Legend

Note:

R00	AUG 2020	STAGE -1	A.S.A.	F.I.A.	M.H.
REV. NO.	Date	Revision Description	Drawn	Chkd	Appd.

Title:

Consultancy Services for Survey, Design and EIA works of Water Supply and Sewerage Facilities in 6 Islands, Maldives – Package 6

Sub Title:

Water Supply System in Ga. Nilandhoo

Client:

Ministry of National Planning, Housing and Infrastructure, Republic of Maldives

EPOCH ASSOCIATES

T: +960 333 3528
E: info@epoch.associates
W: www.epoch.associates
A: G. Rosary West,
Husnuheenaa Magu, Male', Maldives

FEEDBACK INFRA
Walking Self Sustainable Happiness

Drawn: A.S.A.	Checked: F.I.A.
Designed: A.S.A.	Approved: M.H.
Date: Aug 2020	SCALE (A3): 1:100
Project No: EP-WS/2019/06	
Rev: **R-00**	Page: **S.3 (2)**

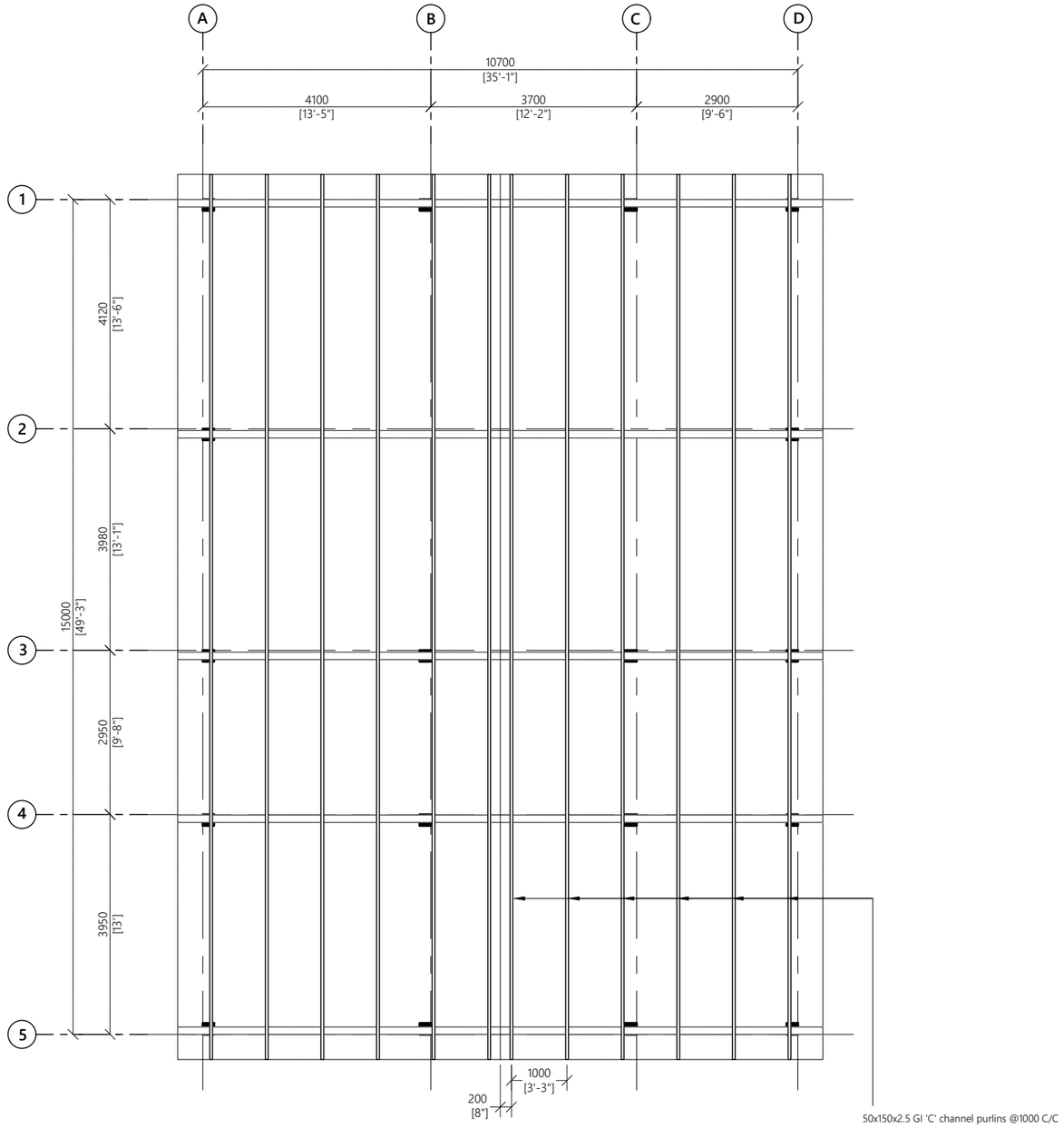

ROOF FRAMING PLAN

1:100

Legend

Note:

REV. NO.	Date	Revision Description	Drawn	Chkd	Appd.
R00	AUG 2020	STAGE -1	A.S.A.	F.I.A.	M.H.

Title:

Consultancy Services for Survey, Design and EIA works of Water Supply and Sewerage Facilities in 6 Islands, Maldives – Package 6

Sub Title:

Water Supply System in Ga. Nilandhoo

Client:

Ministry of National Planning, Housing and Infrastructure, Republic of Maldives

EPOCH ASSOCIATES

T: +960 333 3528
E: info@epoch.associates
W: wwww.epoch.associates
A: G. Rosary West,
Husnuheenaa Magu, Male', Maldives

FEEDBACK INFRA

Drawn:	A.S.A.	Checked:	F.I.A.
Designed:	A.S.A.	Approved:	M.H.
Date:	Aug 2020	SCALE (A3):	1:100
Project No:	EP-WS/2019/06		
Rev: R-00		Page:	S.3 (3)

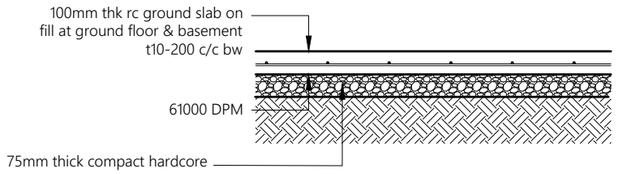

Note:

- All cover blocks shall be casted using grade C25/30 concrete with 5-10mm aggregates
- For slab, rebar spacer chairs spacing shall be minimum 1m spacing or 1 no. per 1 sqm

TYPICAL GROUND SLAB DETAIL

1:20

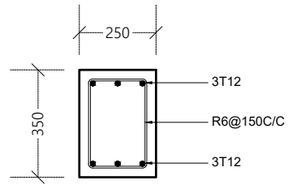

FOUNDATION BEAM (FB)

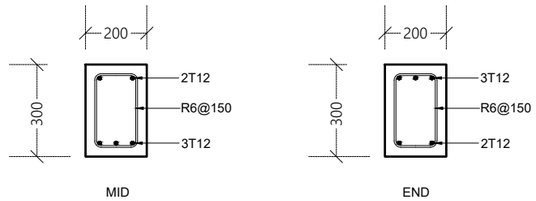

ROOF BEAM (RB)

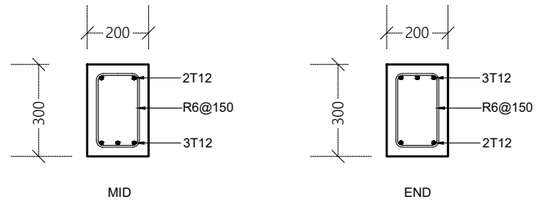

SLOPING ROOF BEAM (SRB)

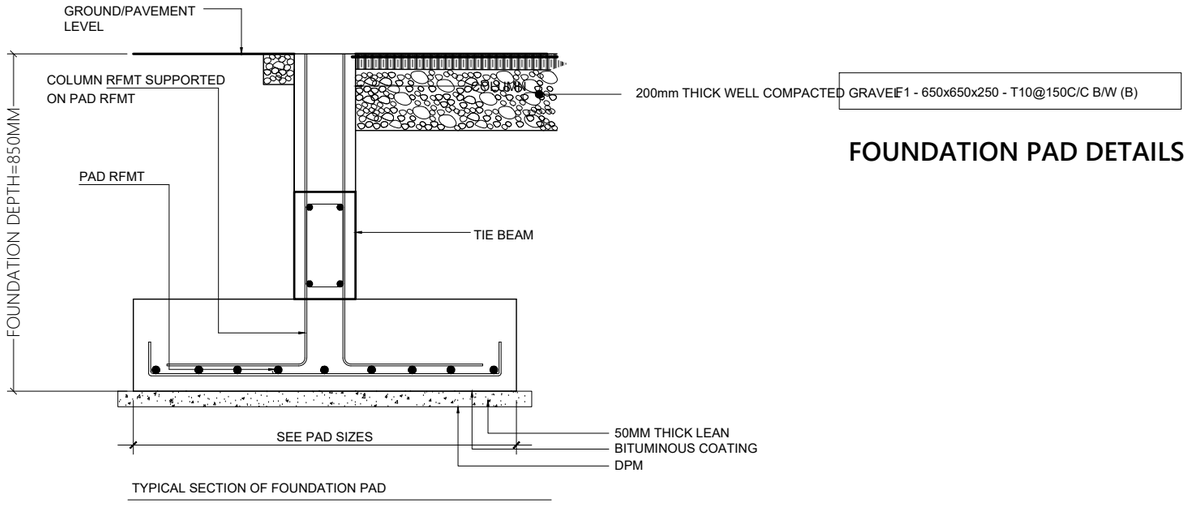

FOUNDATION PAD DETAILS

TYPICAL COLUMN SECTION

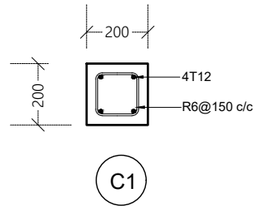

COLUMN DETAIL

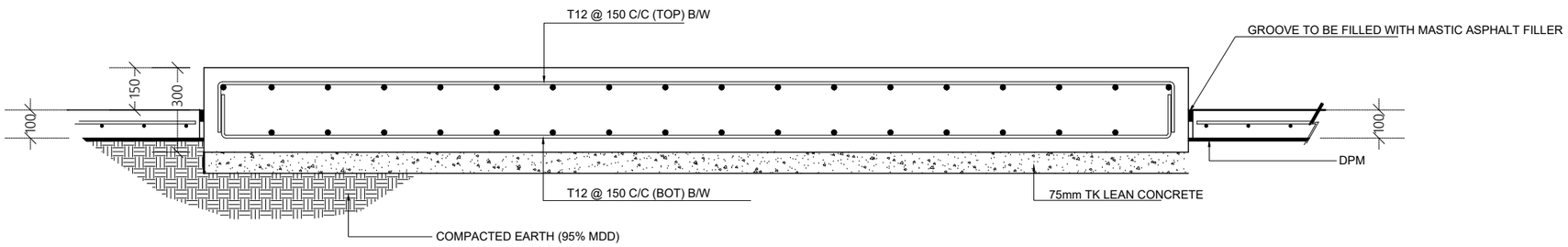

RO PLANT BASE DETAIL

STRUCTURAL DETAILS

1:20

Legend

Note:

REV. NO.	Date	Revision Description	Drawn	Chkd	Appd.
R00	AUG 2020	STAGE -1	A.S.A.	F.I.A.	M.H.

Title:
Consultancy Services for Survey, Design and EIA works of Water Supply and Sewerage Facilities in 6 Islands, Maldives – Package 6

Sub Title:
Water Supply System in Ga. Nilandhoo

Client:
Ministry of National Planning, Housing and Infrastructure, Republic of Maldives

EPOCH ASSOCIATES
T: +960 333 3528
E: info@epoch.associates
W: www.epoch.associates
A: G. Rosary West, Husnuheenaa Magu, Male', Maldives

FEEDBACK INFRA
Waduruvu Sofuaainuvuru Kiyaru

Drawn: A.S.A.	Checked: F.I.A.
Designed: A.S.A.	Approved: M.H.
Date: Aug 2020	SCALE (A3): 1:100
Project No: EP-WS/2019/06	
Rev: R-00	Page: S.D (1)

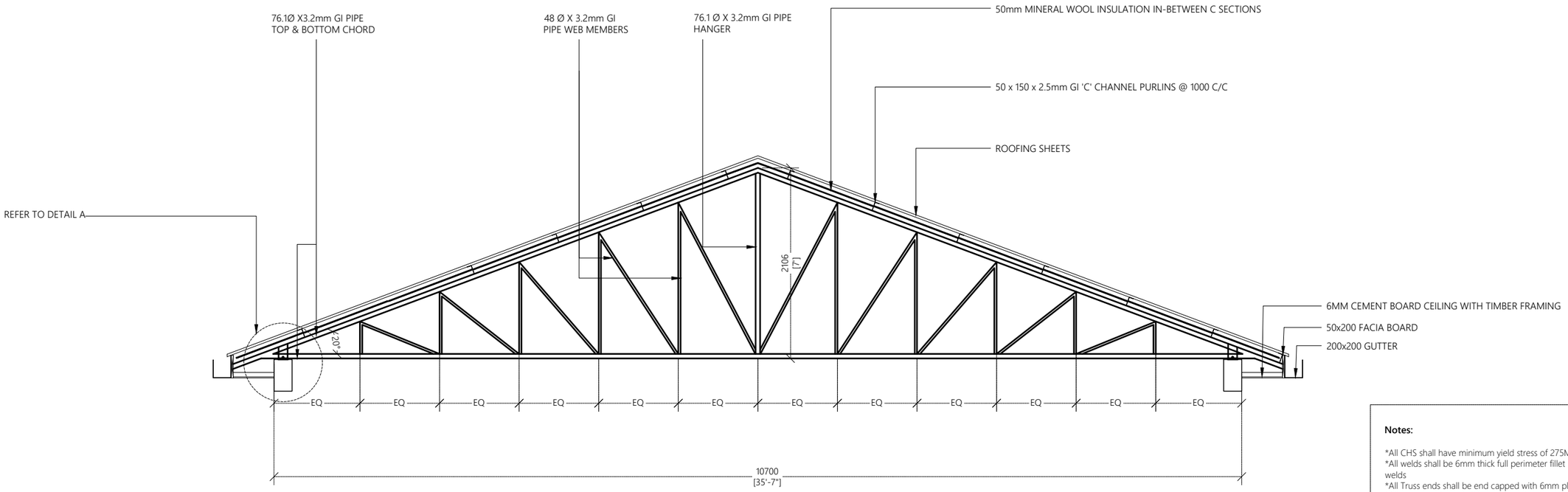

TRUSS DETAIL TR1 @ GRID 2

1:50

Notes:

*All CHS shall have minimum yield stress of 275MPa
*All welds shall be 6mm thick full perimeter fillet welds
*All Truss ends shall be end capped with 6mm plates
*All truss members shall be protected with anti corrosive coatings

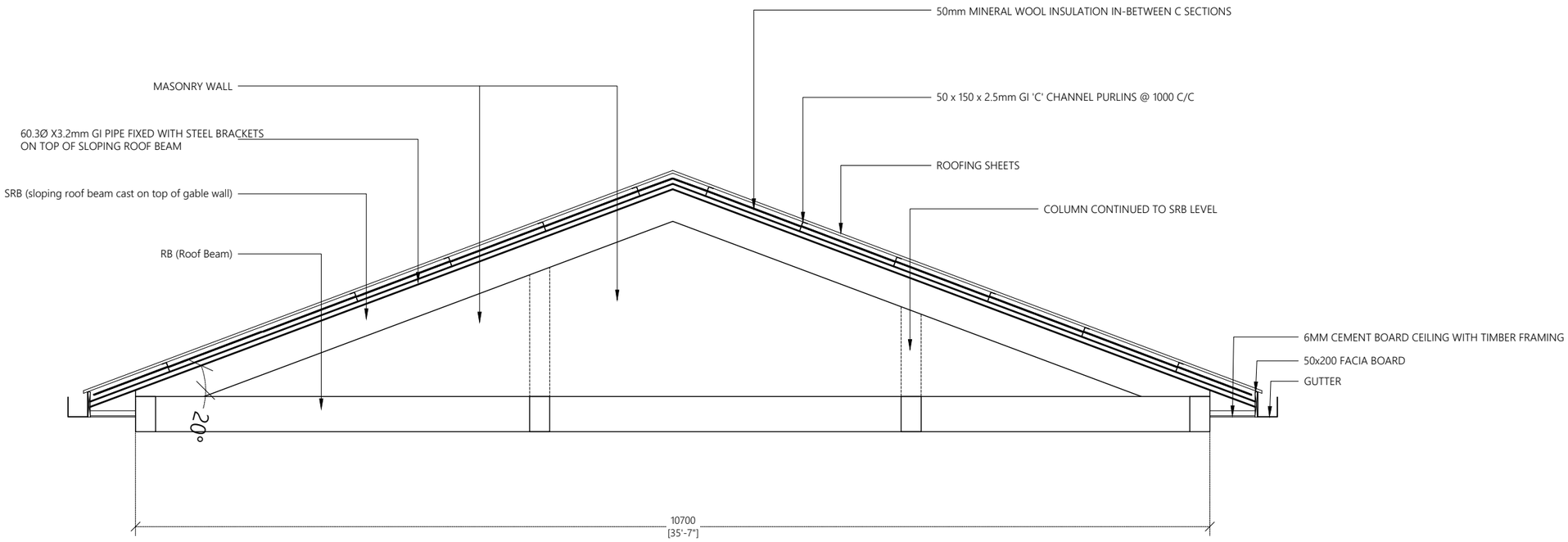

DETAIL OF 63ϕx3.2MM PIPE FIXED ON GRID 1,3,4 & 5

1:50

Legend

Note:

REV. NO.	Date	Revision Description	Drawn	Chkd	Appd.
R00	AUG 2020	STAGE -1	A.S.A.	F.I.A.	M.H.

Title:
Consultancy Services for Survey, Design and EIA works of Water Supply and Sewerage Facilities in 6 Islands, Maldives – Package 6

Sub Title:
Water Supply System in Ga. Nilandhoo

Client:
Ministry of National Planning, Housing and Infrastructure, Republic of Maldives

EPOCH ASSOCIATES
T: +960 333 3528
E: info@epoch.associates
W: www.epoch.associates
A: G. Rosary West,
Husnuheenaa Magu, Male', Maldives

FEEDBACK INFRA
Working Infrastructure Happy

Drawn: A.S.A.	Checked: F.I.A.
Designed: A.S.A.	Approved: M.H.
Date: Aug 2020	SCALE (A3): 1:100
Project No: EP-WS/2019/06	
Rev: R-00	Page: S.D (2)

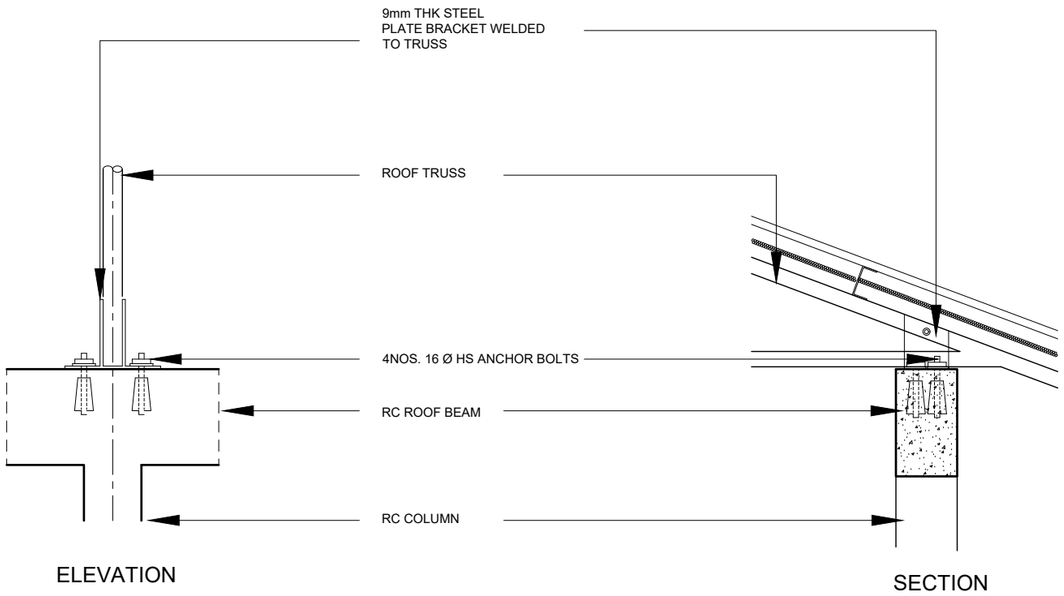

DETAIL A

1:20

Legend

Note:

REV. NO.	Date	Revision Description	Drawn	Chkd	Appd.
R00	AUG 2020	STAGE -1	A.S.A.	F.I.A.	M.H.

Title:

Consultancy Services for Survey, Design and EIA works of Water Supply and Sewerage Facilities in 6 Islands, Maldives – Package 6

Sub Title:

Water Supply System in Ga. Nilandhoo

Client:

Ministry of National Planning, Housing and Infrastructure, Republic of Maldives

EPOCH Associates

T: +960 333 3528
E: info@epoch.associates
W: www.epoch.associates
A: G. Rosary West,
Husnuheenaa Magu, Male', Maldives

FEEDBACK INFRA

Drawn:	A.S.A.	Checked:	F.I.A.
Designed:	A.S.A.	Approved:	M.H.
Date:	Aug 2020	SCALE (A3):	1:100

Project No: EP-WS/2019/06

Rev: **R-00**

Page: **S.D (3)**

ARCHITECTURAL AND STRUCTURAL DRAWINGS OF

PROPOSED SINGLE STOREY BUILDING AT

RO PLANT VEHICLE SHED, GA.NILANDHOO

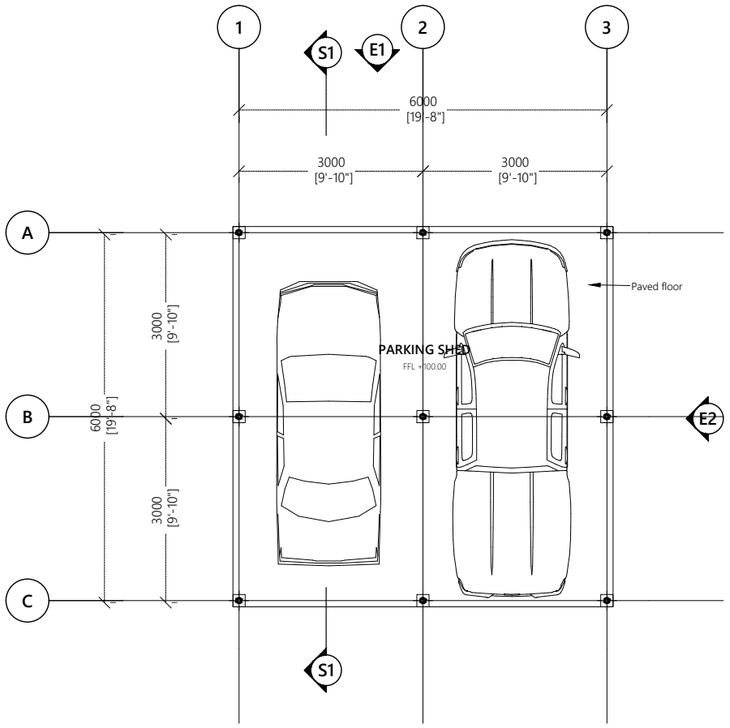

GROUND FLOOR PLAN

1:100

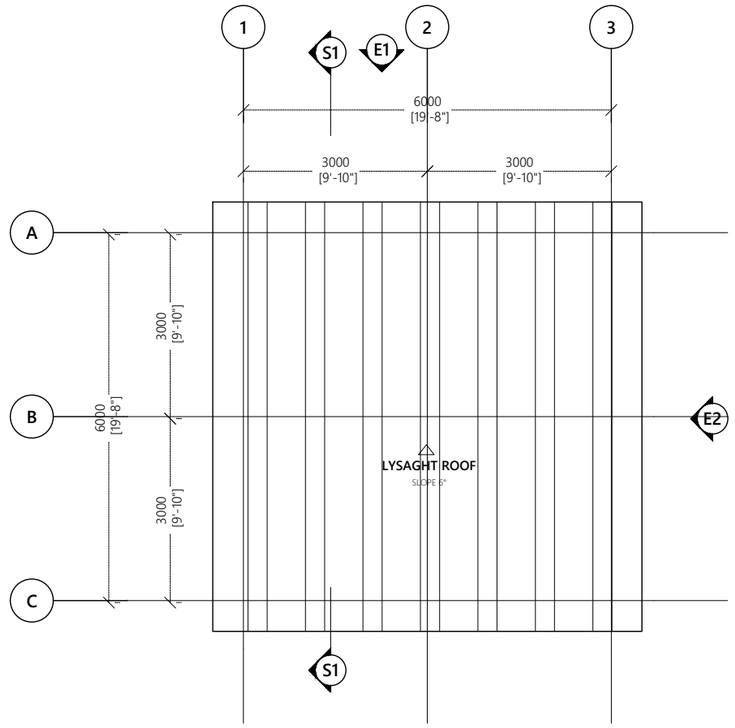

ROOF PLAN

1:100

Legend

Note:

REV. NO.	Date	Revision Description	Drawn	Chkd	Appd.
R00	AUG 2020	STAGE -1	A.S.A.	F.I.A.	M.H.

Title:

Consultancy Services for Survey, Design and EIA works of Water Supply and Sewerage Facilities in 6 Islands, Maldives – Package 6

Sub Title:

Water Supply System in Ga. Nilandhoo

Client:

Ministry of National Planning, Housing and Infrastructure, Republic of Maldives

EPOCH ASSOCIATES
T: +960 333 3528
E: info@epoch.associates
W: www.epoch.associates
A: G. Rosary West,
Husnuheenaa Magu, Male', Maldives

FEEDBACK INFRA
Working Infrastructure Happier

Drawn: A.S.A.	Checked: F.I.A.
Designed: A.S.A.	Approved: M.H.
Date: Aug 2020	SCALE (A3): 1:100
Project No: EP-WS/2019/06	
Rev: R-00	Page: A.6 (1)

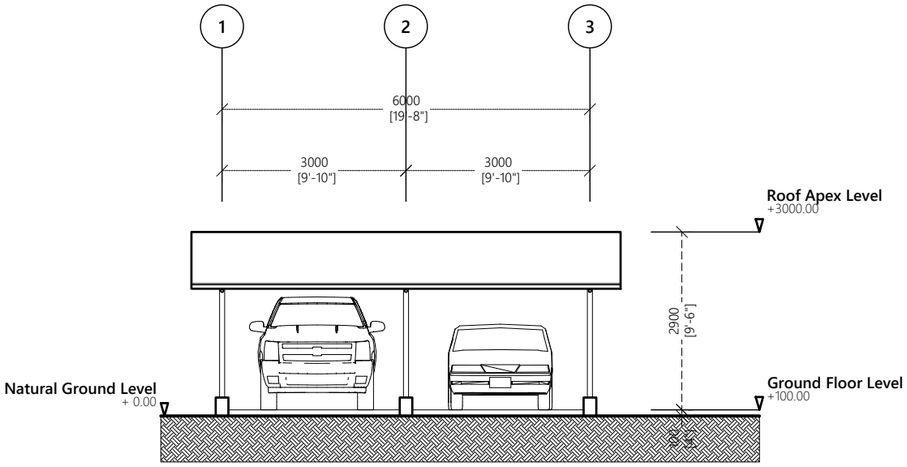

ELEVATION E1

1:100

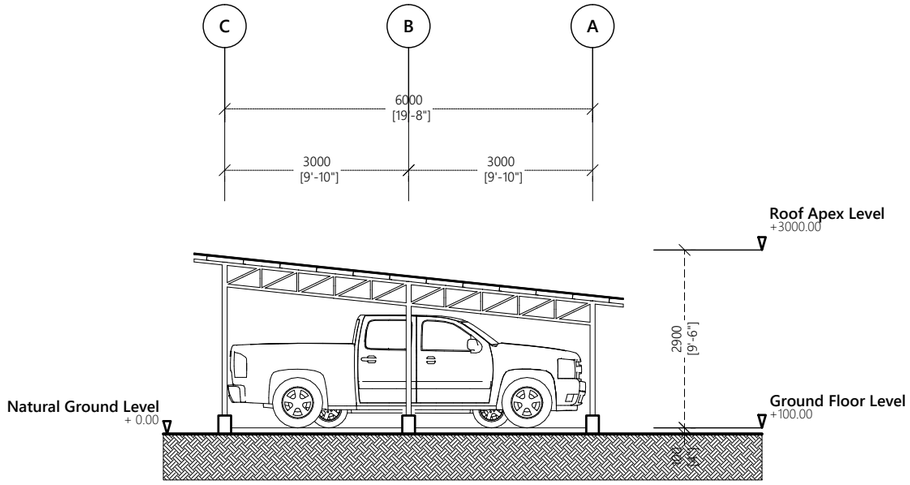

ELEVATION E2

1:100

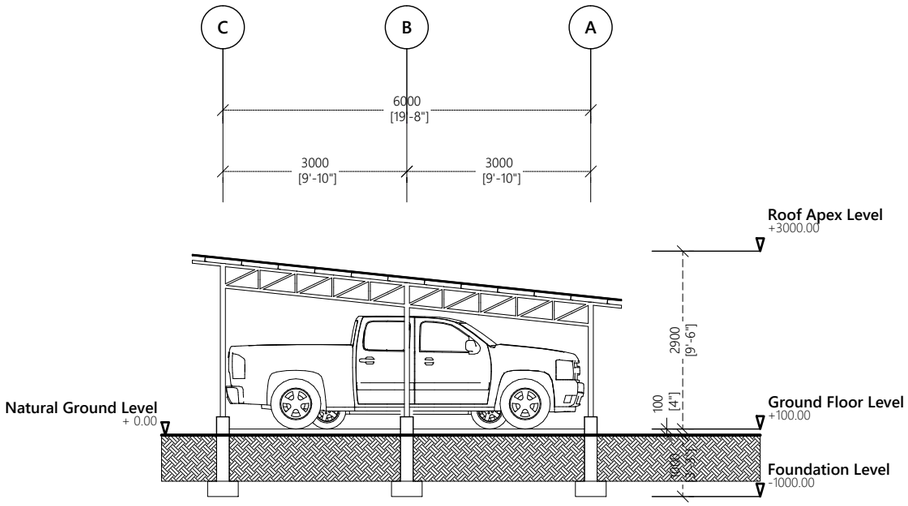

SECTION S1

1:100

Legend

Note:

REV. NO.	Date	Revision Description	Drawn	Chkd	Appd.
R00	AUG 2020	STAGE -1	A.S.A.	F.I.A.	M.H.

Title:

Consultancy Services for Survey, Design and EIA works of Water Supply and Sewerage Facilities in 6 Islands, Maldives – Package 6

Sub Title:

Water Supply System in Ga. Nilandhoo

Client:

Ministry of National Planning, Housing and Infrastructure, Republic of Maldives

EPOCH ASSOCIATES

T: +960 333 3528
E: info@epoch.associates
W: www.epoch.associates
A: G. Rosary West,
Husnuheenaa Magu, Male', Maldives

FEEDBACK INFRA
Wahlung Infrastructure Hoppe

Drawn:	A.S.A.	Checked:	F.I.A.
Designed:	A.S.A.	Approved:	M.H.
Date:	Aug 2020	SCALE (A3):	1:100

Project No: EP-WS/2019/06

Rev: **R-00**

Page: **A.6 (2)**

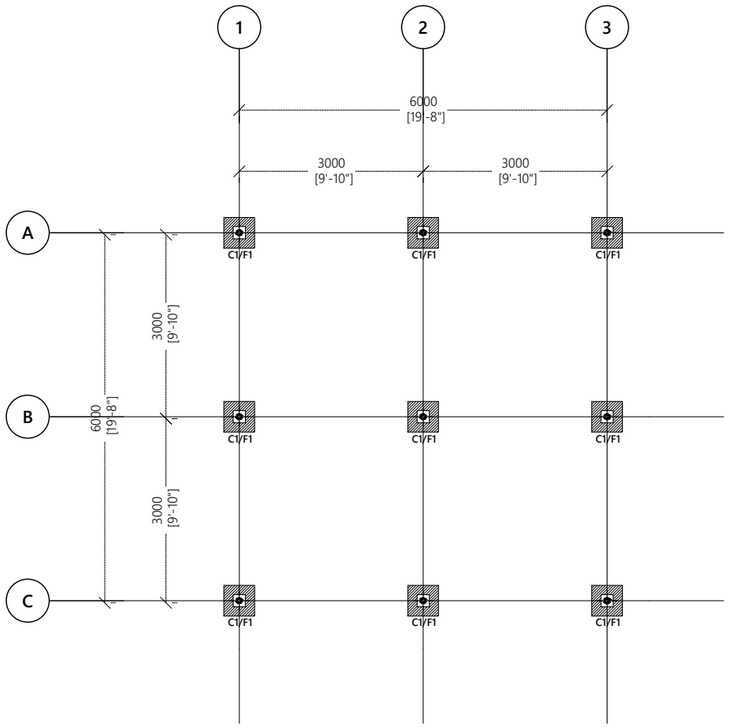

FOUNDATION PLAN

1:100

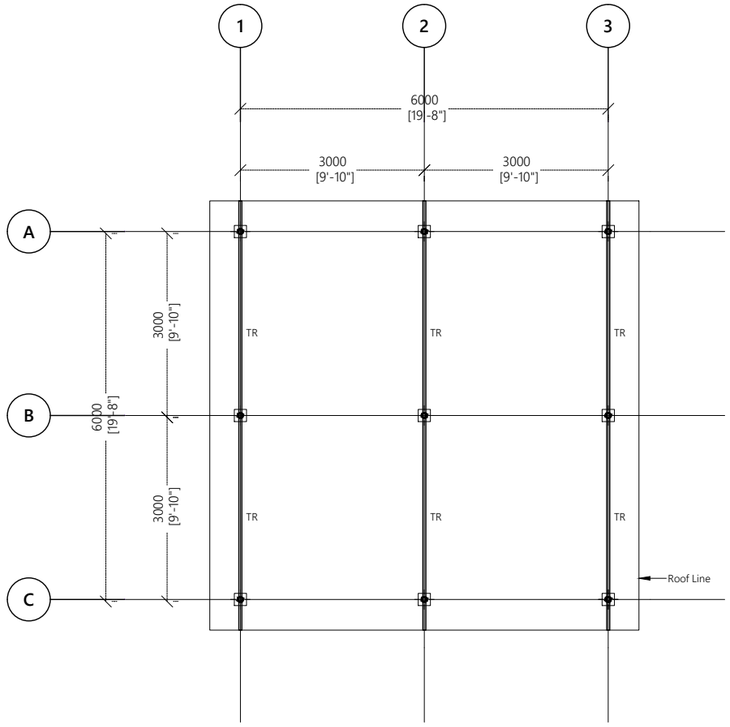

ROOF TRUSS PLAN

1:100

Legend

Note:

REV. NO.	Date	Revision Description	Drawn	Chkd	Appd.
R00	AUG 2020	STAGE -1	A.S.A.	F.I.A.	M.H.

Title:

Consultancy Services for Survey, Design and EIA works of Water Supply and Sewerage Facilities in 6 Islands, Maldives – Package 6

Sub Title:

Water Supply System in Ga. Nilandhoo

Client:

Ministry of National Planning, Housing and Infrastructure, Republic of Maldives

EPOCH ASSOCIATES
T: +960 333 3528
E: info@epoch.associates
W: www.epoch.associates
A: G. Rosary West,
Husnuheenaa Magu, Male', Maldives

FEEDBACK INFRA
Working Infrastructure Happy

Drawn: A.S.A.	Checked: F.I.A.
Designed: A.S.A.	Approved: M.H.
Date: Aug 2020	SCALE (A3): 1:100
Project No: EP-WS/2019/06	
Rev: R-00	Page: S.4 (1)

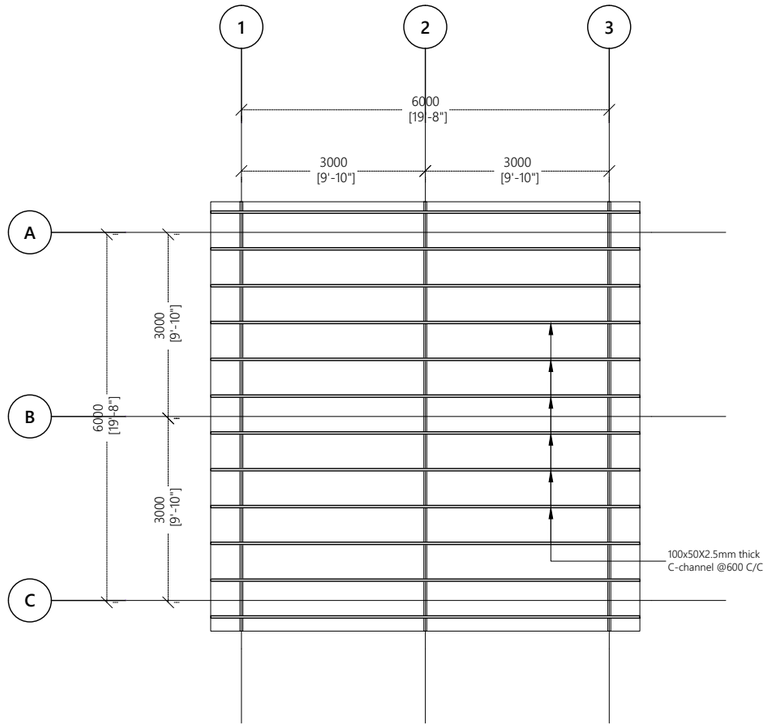

ROOF FRAMING PLAN

1:100

Legend

Note:

R00	AUG 2020	STAGE -1	A.S.A.	F.I.A.	M.H.
REV. NO.	Date	Revision Description	Drawn	Chkd	Appd.

Title:

Consultancy Services for Survey, Design and EIA works of Water Supply and Sewerage Facilities in 6 Islands, Maldives – Package 6

Sub Title:

Water Supply System in Ga. Nilandhoo

Client:

Ministry of National Planning, Housing and Infrastructure, Republic of Maldives

EPOCH ASSOCIATES

T: +960 333 3528
E: info@epoch.associates
W: wwww.epoch.associates
A: G. Rosary West,
Husnuheenaa Magu, Male', Maldives

FEEDBACK INFRA
Working Infrastructure Happy

Drawn:	A.S.A.	Checked:	F.I.A.
Designed:	A.S.A.	Approved:	M.H.
Date:	Aug 2020	SCALE (A3):	1:100
Project No:	EP-WS/2019/06		
Rev: **R-00**		Page: **S.4(2)**	

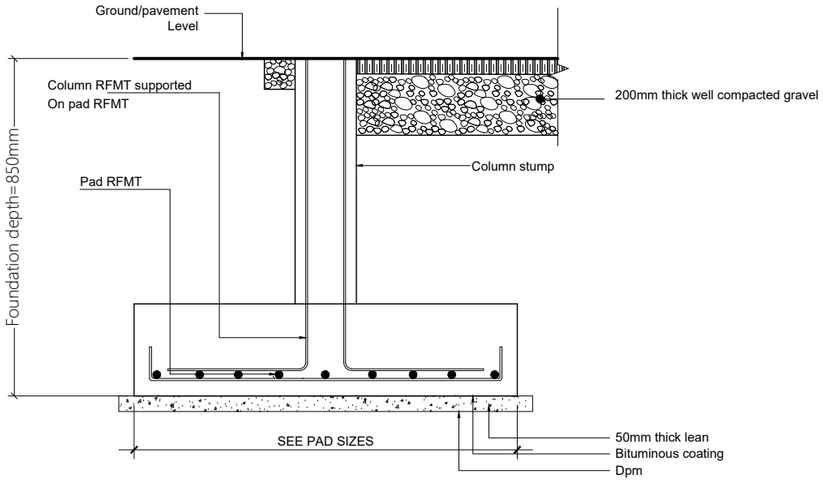

TYPICAL FOOTING DETAIL

1:20

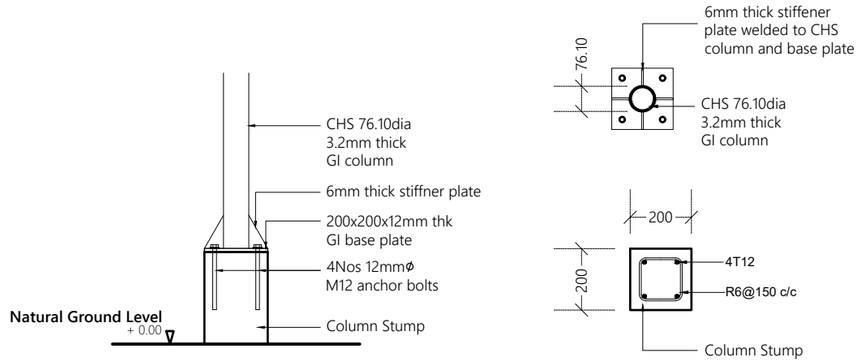

COLUMN DETAIL

1:20

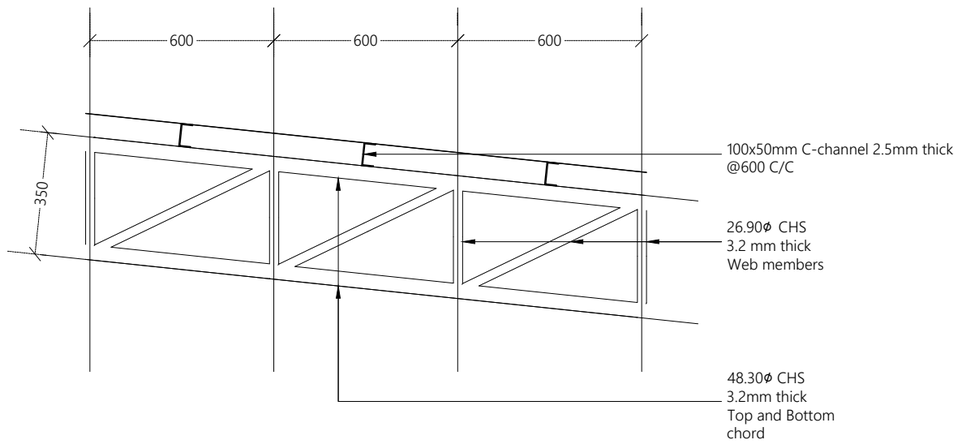

TRUSS DETAIL

1:20

Legend

Note:

Foundation Pad Detail.
* F1 - 500x500x250 - T10@150C/C B/W (B)

*All CHS shall have minimum yield stress of 275MPa
*All welds shall be 6mm thick full perimeter fillet welds
*All Truss ends shall be end capped with 6mm plates
*All truss members shall be protected with anti corrosive coatings

REV. NO.	Date	Revision Description	Drawn	Chkd	Appd.
R00	AUG 2020	STAGE -1	A.S.A.	F.I.A.	M.H.

Title:
Consultancy Services for Survey, Design and EIA works of Water Supply and Sewerage Facilities in 6 Islands, Maldives – Package 6

Sub Title:
Water Supply System in Ga. Nilandhoo

Client:
Ministry of National Planning, Housing and Infrastructure, Republic of Maldives

EPOCH ASSOCIATES
T: +960 333 3528
E: info@epoch.associates
W: www.epoch.associates
A: G. Rosary West,
Husnuheenaa Magu, Male', Maldives

FEEDBACK INFRA

Drawn:	A.S.A.	Checked:	F.I.A.
Designed:	A.S.A.	Approved:	M.H.
Date:	Aug 2020	SCALE (A3):	1:50

Project No: EP-WS/2019/06

Rev: **R-00**

Page: **S.D (4)**

BUILDING SERVICES DRAWINGS OF

PROPOSED SINGLE STOREY BUILDING AT

RO PLANT ADMIN BUILDING, GA.NILANDHOO

For Ministry of National Planning, Housing and Infrastructure

CONTENTS

BUILDING SERVICES DRAWINGS	
GROUND FLOOR POWER AND ACV LAYOUT	PAC-01
GROUND FLOOR FDP LAYOUT	FDP-01
GROUND FLOOR LIGHTING LAYOUT	EL-01
GROUND FLOOR PLUMBING LAYOUT	PL-01
GROUND FLOOR DRAINAGE LAYOUT	DR-01
ROOF DRAINAGE LAYOUT	DR-02
SITE LIGHTING LAYOUT	EL-02

Legend

- 13A Twin Socket
- 13A Twin Socket With USB Ports
- 15A Switched Socket @ H.L.
- 15A Socket In Polycarbonate Box
- 15A Switch @ 1200mm From F.F.L.
- 13A Power Socket
- Distribution Board
- HL. High Level
- 82Ø PVC Duct For Tel./Internet Cable Lead In Below Ground Slab
- Main Incoming Cable For Power In 110Ø PVC Duct Below Ground Slab
- ISB Internet Switchboard
- Telephone Outlet
- Computer Network Outlet
- Emergency Light
- M Electricity Meter

Notes: -
- All 13A Power Outlets For Kitchen Hood Or Under Cabinet Or Wardrobe Lights At 1800mm From F.F.L.
- All Twin Sockets At 300mm From F.F.L. Except Located At Kitchen Cupboard Area Which Shall Be At 1200mm From F.F.L.
- All Computer, TV And Telephone Points At 300mm From F.F.L.
- All 20A Switched Neon Indicator At 1200mm From F.F.L.

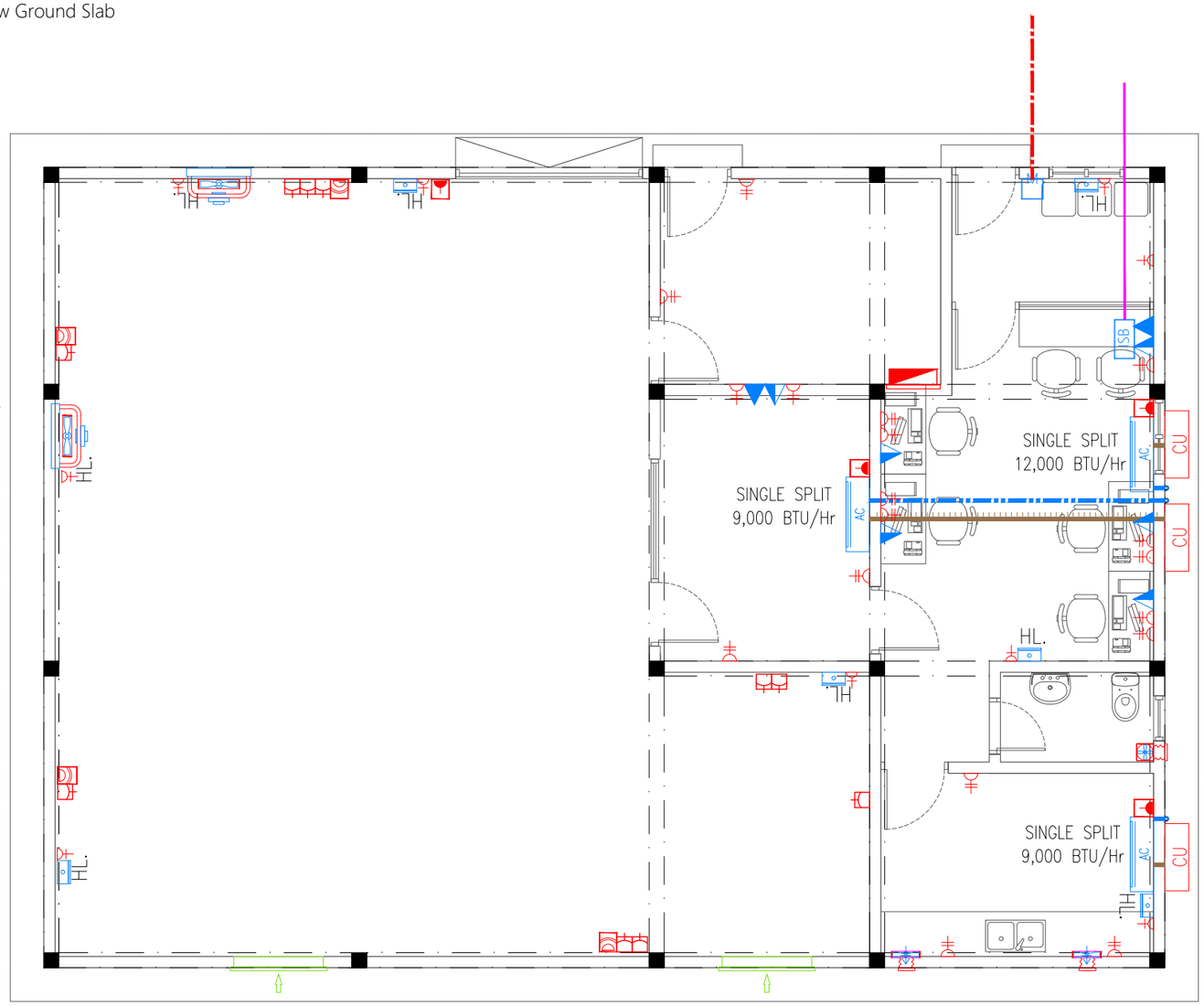

GROUND FLOOR POWER A

Legend

Legend

Note:
- All 13A Power Outlets For Kitchen Hood Or Under Cabinet Or Wardrobe Lights At 1800mm From F.F.L.
- All Twin Sockets At 300mm From F.F.L. Except Located At Kitchen Cupboard Area Which Shall Be At 1200mm From F.F.L.
- All Computer, TV And Telephone Points At 300mm From F.F.L.
- All 20A Switched Neon Indicator At 1200mm From F.F.L.

REV. NO.	Date	Revision Description	Drawn	Chkd	Appd.
R00	AUG 2020	STAGE -1	H.R.	M.R.	M.R.

Title:
Consultancy Services for Survey, Design and EIA works of Water Supply and Sewerage Facilities in 6 Islands, Maldives – Package 6

Sub Title:
Water Supply System in Ga. Nilandhoo

Client:
Ministry of National Planning, Housing and Infrastructure, Republic of Maldives

EPOCH ASSOCIATES
T: +960 333 3528
E: info@epoch.associates
W: www.epoch.associates
A: G. Rosary West, Husnuheenaa Magu, Male', Maldives

FEEDBACK INFRA
Making Infrastructure Happen

Drawn: H.R.	Checked: M.R.
Designed: H.R.	Approved: M.R.
Date: Aug 2020	SCALE (A3): 1:75
Project No: 01010101	
Rev: R-00	Page: PAC-01

Legend

- DCP Extinguisher (load: 6kg) In Polycarbonate Enclosure
- CO_2 Extinguisher (load: 2kg) In Polycarbonate Enclosure
- H_2O Extinguisher (load: 9L) In Polycarbonate Enclosure
- Manual Call Point
- SD Smoke Detector
- HD Heat Detector
- Beacon
- Sounder Bell
- FB Fire Blanket
- 2.5mm^2 Fire Retardant Low Smoke (FRLS) Cables In FRLS Conduits
- FACP Fire Alarm Control Panel
- EXIT Exit Sign

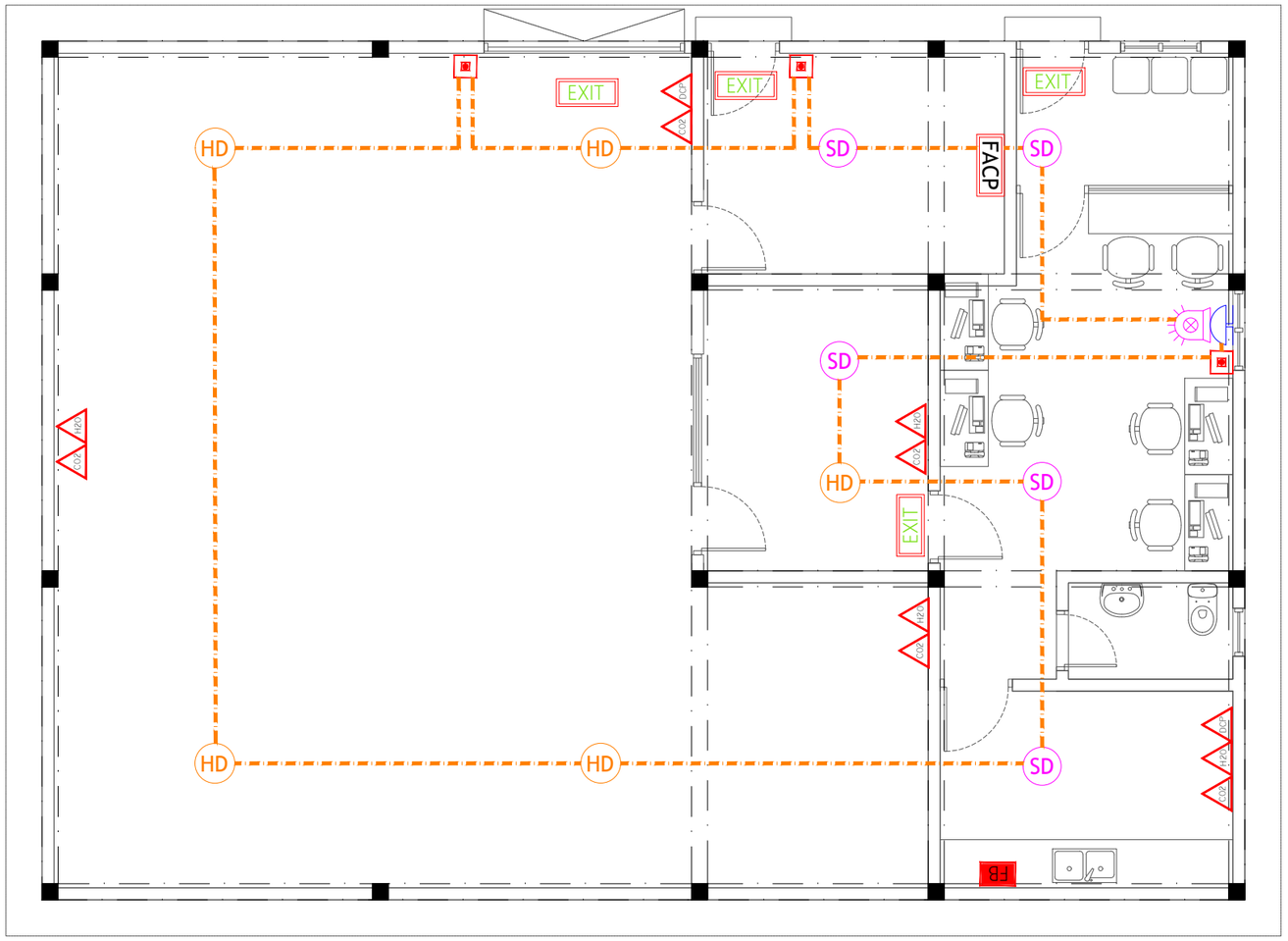

GROUND FLOO

Legend

Note:

REV. NO.	Date	Revision Description	Drawn	Chkd	Appd.
R00	AUG 2020	STAGE -1	H.R.	M.R.	M.R.

Title:
Consultancy Services for Survey, Design and EIA works of Water Supply and Sewerage Facilities in 6 Islands, Maldives – Package 6

Sub Title:
Water Supply System in Ga. Nilandhoo

Client:
Ministry of National Planning, Housing and Infrastructure, Republic of Maldives

EPOCH ASSOCIATES
T: +960 333 3528
E: info@epoch.associates
W: www.epoch.associates
A: G. Rosary West, Husnuheenaa Magu, Male', Maldives

FEEDBACK INFRA
Making Infrastructure Happen

Drawn:	H.R.	Checked:	M.R.
Designed:	H.R.	Approved:	M.R.
Date:	Aug 2020	SCALE (A3):	1:75
Project No:	01010101		
Rev: R-00		Page: FDP-01	

Legend

- Ceiling Light (12W)
- Recessed Ceiling Light (12W)
- Weather Proof Wall Light IP55 (12W)
- 60W, HPS, Low Bay Light
- 1 2 3 4 5 Light Switch (1 Gang - 4 Gang)
- 1 2 3 4 Two Way Light Switches (1 Gang - 4 Gang)
- SINGLE INTAKE, CENTRIFUGAL, EXTERNAL MOTOR, 800M3/Hr
- Ceiling Mounted Exhaust Fan 90m3/hr
- Wall Mounted Exhaust Fan
- Cement Board False Ceiling [200mm below beam bottom]
- Plaster Board False Ceiling [200mm below beam bottom]
- Plaster Board False Ceiling [at roof beam top level]

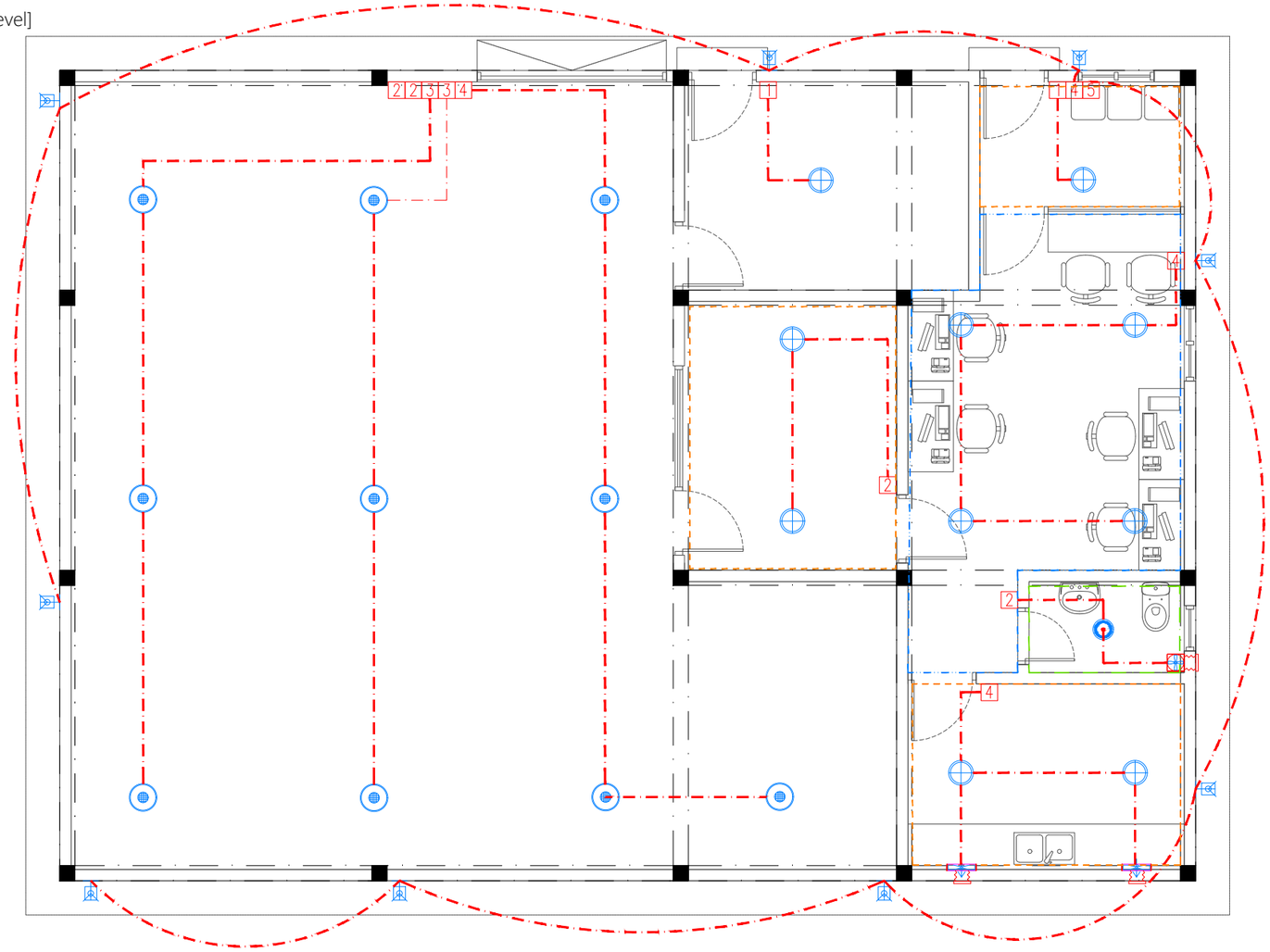

GROUND FLOOR LIG

Legend

Note:

REV. NO.	Date	Revision Description	Drawn	Chkd	Appd.
R00	AUG 2020	STAGE -1	H.R.	M.R.	M.R.

Title:
Consultancy Services for Survey, Design and EIA works of Water Supply and Sewerage Facilities in 6 Islands, Maldives – Package 6

Sub Title:
Water Supply System in Ga. Nilandhoo

Client:
Ministry of National Planning, Housing and Infrastructure, Republic of Maldives

EPOCH ASSOCIATES
T: +960 333 3528
E: info@epoch.associates
W: www.epoch.associates
A: G. Rosary West, Husnuheenaa Magu, Male', Maldives

FEEDBACK INFRA
Making Infrastructure Happen

Drawn:	H.R.	Checked:	M.R.
Designed:	H.R.	Approved:	M.R.
Date:	Aug 2020	SCALE (A3):	1:75

Project No: 01010101

Rev: R-00

Page: EL-01

Legend

- 16Ø Cold Water Supply To Basin Faucet
- 16Ø Cold Water Supply To Bidet Shower
- 16Ø Cold Water Supply To Wall Tap
- 16Ø Cold Water Supply To Cistern
- Gate Valve
- Rise In Wall
- MWSC Meter
- 25Ø Cold Water Supply Pipes Running Underground
- 20Ø Cold Water Supply Pipes Running In Wall

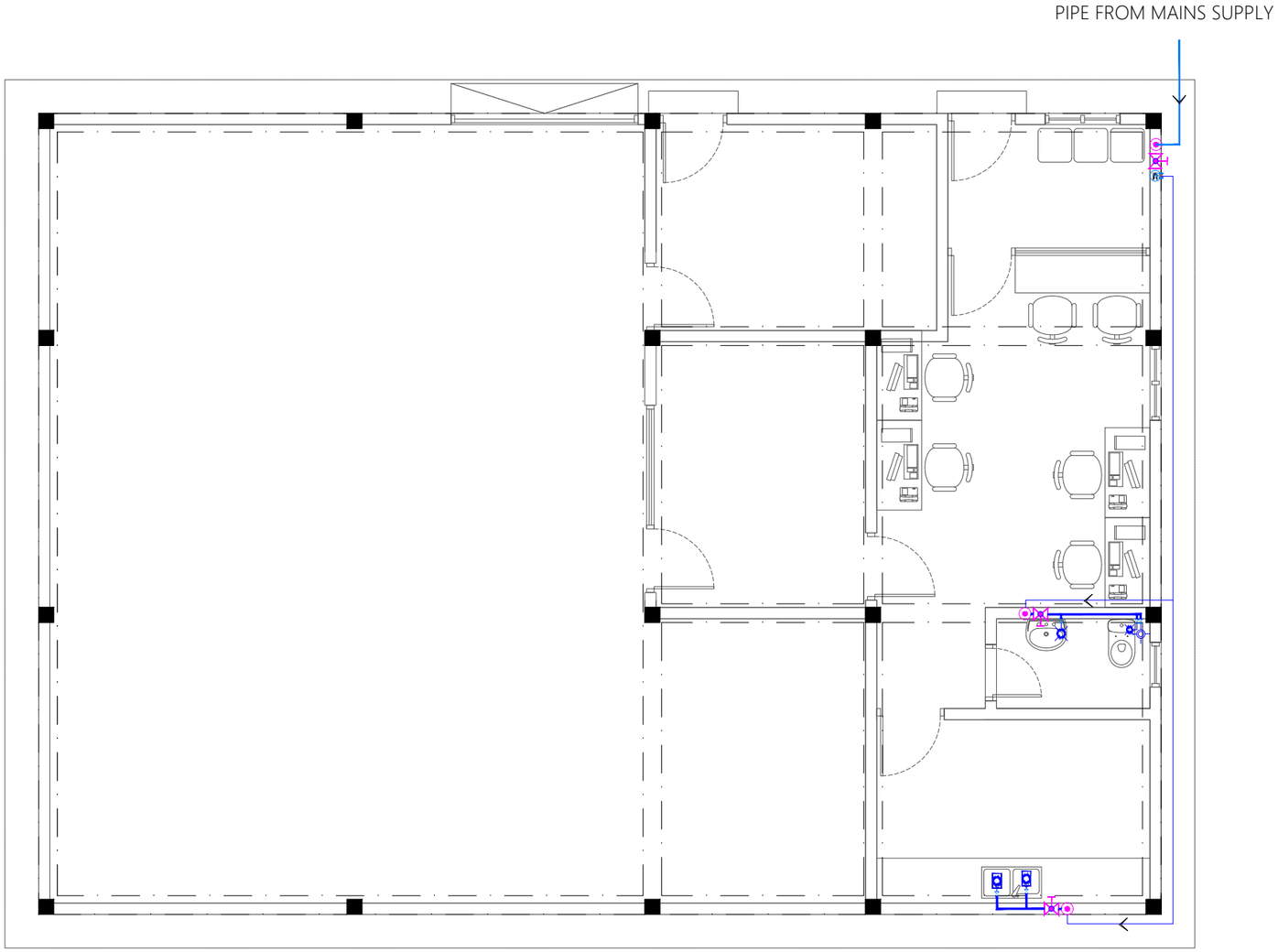

GROUND FLOOR PLU

Legend

Note:

REV. NO.	Date	Revision Description	Drawn	Chkd	Appd.
R00	AUG 2020	STAGE -1	H.R.	M.R.	M.R.

Title:
Consultancy Services for Survey, Design and EIA works of Water Supply and Sewerage Facilities in 6 Islands, Maldives – Package 6

Sub Title:
Water Supply System in Ga. Nilandhoo

Client:
Ministry of National Planning, Housing and Infrastructure, Republic of Maldives

EPOCH ASSOCIATES
T: +960 333 3528
E: info@epoch.associates
W: www.epoch.associates
A: G. Rosary West, Husnuheenaa Magu, Male', Maldives

FEEDBACK INFRA
Making Infrastructure Happen

Drawn: H.R.	Checked: M.R.
Designed: H.R.	Approved: M.R.
Date: Aug 2020	SCALE (A3): 1:75

Project No: 01010101

Rev: R-00

Page: PL-01

Legend

- Floor Drain
- Floor Gully
- 82Ø Soil Pipe (uPVC Pipe)
- 82Ø Soil Vent Pipe (uPVC Pipe)
- 63Ø Waste Pipe (uPVC Pipe)
- 63Ø Waste Vent Pipe (uPVC Pipe)
- 40Ø Waste Pipe (uPVC Pipe)
- 50Ø Manhole Vent Pipe (uPVC Pipe)
- 110Ø Rain Water Pipes (uPVC Pipe)
- Gully Trap
- 110Ø Rainwater Outlet
- Clean Out Point
- Bottle Trap

Notes: -

-All Drainage Pipes Should Have At A Slope Of 1/150
-All Floor Drains Should Have 'P' Traps

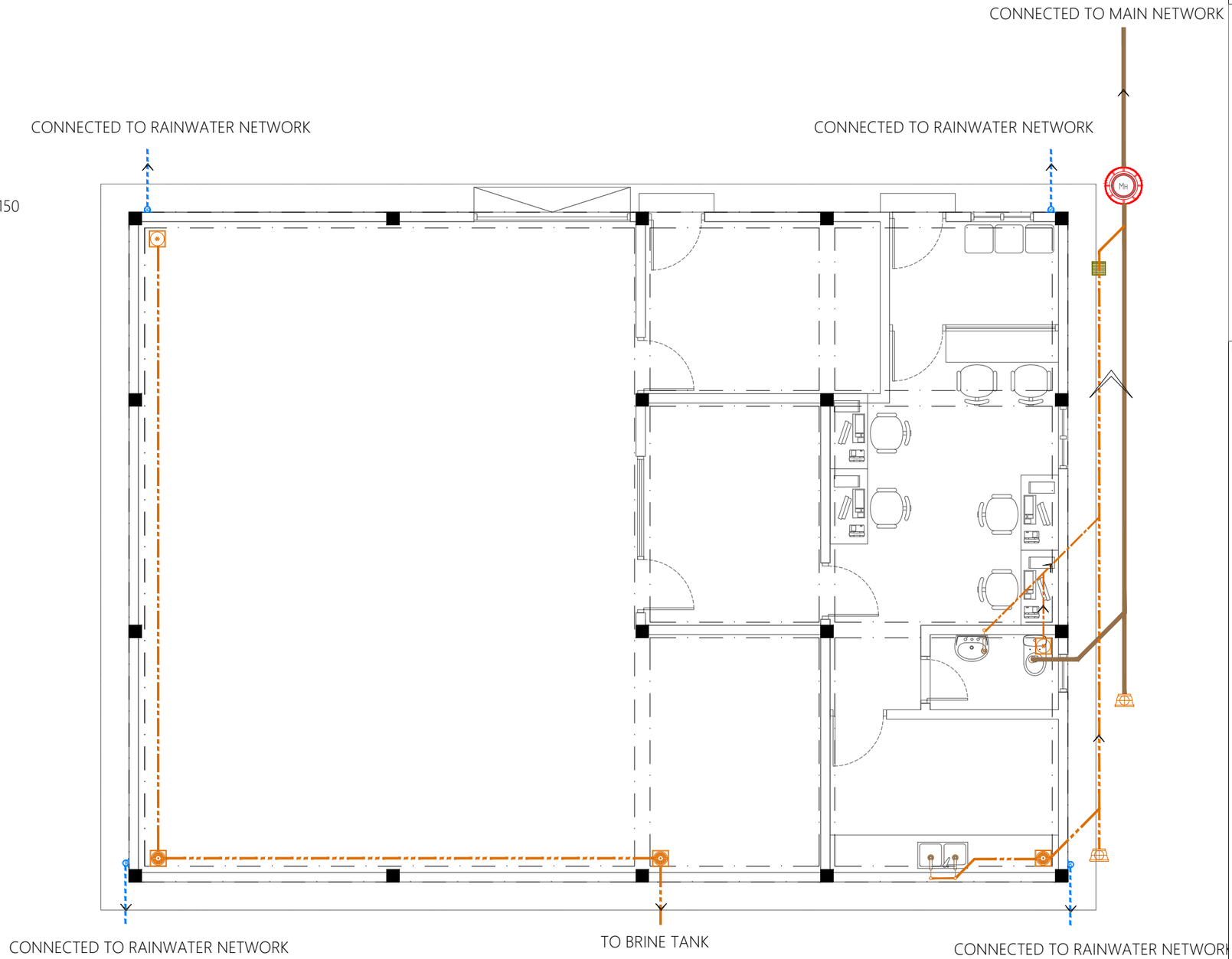

GROUND FLOOR D

Legend

Note:

-All Drainage Pipes Should Have At A Slope Of 1/150
-All Floor Drains Should Have 'P' Traps

REV. NO.	Date	Revision Description	Drawn	Chkd	Appd.
R00	AUG 2020	STAGE -1	H.R.	M.R.	M.R.

Title:
Consultancy Services for Survey, Design and EIA works of Water Supply and Sewerage Facilities in 6 Islands, Maldives – Package 6

Sub Title:
Water Supply System in Ga. Nilandhoo

Client:
Ministry of National Planning, Housing and Infrastructure, Republic of Maldives

EPOCH ASSOCIATES
T: +960 333 3528
E: info@epoch.associates
W: wwww.epoch.associates
A: G. Rosary West, Husnuheenaa Magu, Male', Maldives

FEEDBACK INFRA
Making Infrastructure Happen

Drawn:	H.R.	Checked:	M.R.
Designed:	H.R.	Approved:	M.R.
Date:	Aug 2020	SCALE (A3):	1:75
Project No:	01010101		
Rev:	R-00	Page:	DR-01

Legend

- Floor Drain
- Floor Gully
- 82Ø Soil Pipe (uPVC Pipe)
- 82Ø Soil Vent Pipe (uPVC Pipe)
- 63Ø Waste Pipe (uPVC Pipe)
- 63Ø Waste Vent Pipe (uPVC Pipe)
- 40Ø Waste Pipe (uPVC Pipe)
- 50Ø Manhole Vent Pipe (uPVC Pipe)
- 110Ø Rain Water Pipes (uPVC Pipe)
- Gully Trap
- 110Ø Rainwater Outlet
- Clean Out Point
- Bottle Trap

Notes: -

-All Drainage Pipes Should Have At A Slope Of 1/150
-All Floor Drains Should Have 'P' Traps

ROOF D

Legend

Note:

-All Drainage Pipes Should Have At A Slope Of 1/150
-All Floor Drains Should Have 'P' Traps

REV. NO.	Date	Revision Description	Drawn	Chkd	Appd.
R00	AUG 2020	STAGE -1	H.R.	M.R.	M.R.

Title:
Consultancy Services for Survey, Design and EIA works of Water Supply and Sewerage Facilities in 6 Islands, Maldives – Package 6

Sub Title:
Water Supply System in Ga. Nilandhoo

Client:
Ministry of National Planning, Housing and Infrastructure, Republic of Maldives

EPOCH ASSOCIATES
T: +960 333 3528
E: info@epoch.associates
W: www.epoch.associates
A: G. Rosary West, Husnuheenaa Magu, Male', Maldives

FEEDBACK INFRA
Making Infrastructure Happen

Drawn:	H.R.	Checked:	M.R.
Designed:	H.R.	Approved:	M.R.
Date:	Aug 2020	SCALE (A3):	1:75

Project No: 01010101

Rev: R-00

Page: DR-02

Legend

100W LED Flood Light IP65 @ 4ft Light Post

Solar Powered LED Gate Lights (12W)

1 2 3 4 Light Switch (1 Gang - 4 Gang)

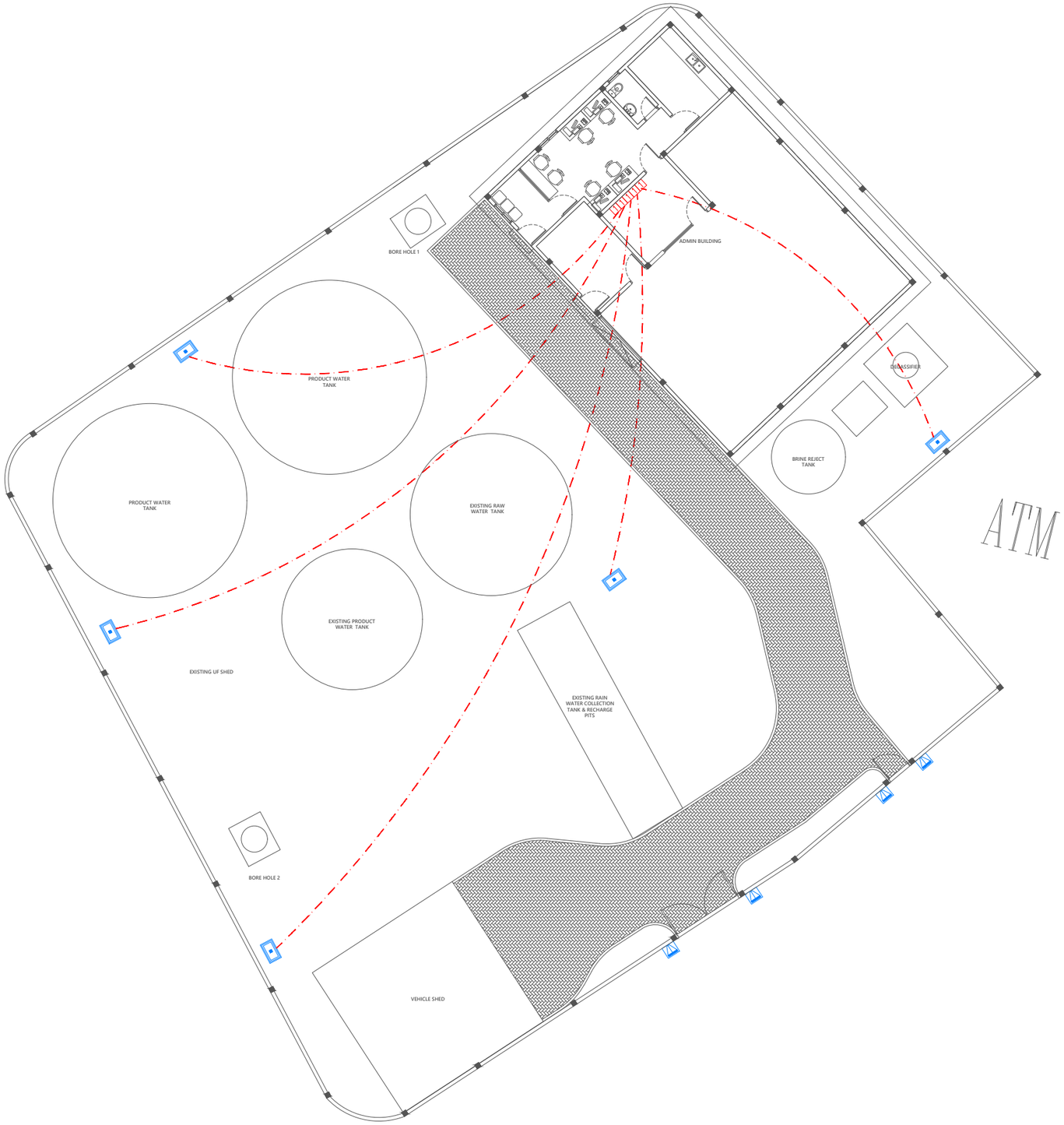

SITE LIGHTING LAYOUT

1:200

Legend

Note:

REV. NO.	Date	Revision Description	Drawn	Chkd	Appd.
R00	AUG 2020	STAGE -1	H.R.	M.R.	M.R.

Title:

Consultancy Services for Survey, Design and EIA works of Water Supply and Sewerage Facilities in 6 Islands, Maldives – Package 6

Sub Title:

Water Supply System in Ga. Nilandhoo

Client:

Ministry of National Planning, Housing and Infrastructure, Republic of Maldives

EPOCH ASSOCIATES

T: +960 333 3528
E: info@epoch.associates
W: www.epoch.associates
A: G. Rosary West, Husnuheenaa Magu, Male', Maldives

FEEDBACK INFRA
Making Infrastructure Happen

Drawn:	H.R.	Checked:	M.R.
Designed:	H.R.	Approved:	M.R.
Date:	Aug 2020	SCALE (A3):	1:150

Project No: EP-WS/2019/06

Rev: R-00

Page: EL-02