Construction of Island Waste Management Center

ADH. MAHIBADHOO

Ministry of Environment, Climate Change and Technology
Green Building, Handhuvareehigun
Rep of Maldives

KOCKS INGENIEURE
KOCKS CONSULT GMBH
Stegemannstr. 32-38
Tel: +49 261 1302-400
Email: info@kocks-ing.de

WS
WATER SOLUTIONS PVT LTD
4th FL, M. Niadhurumaage
Tel: +960 3341643
Email: info@water-solutions.biz

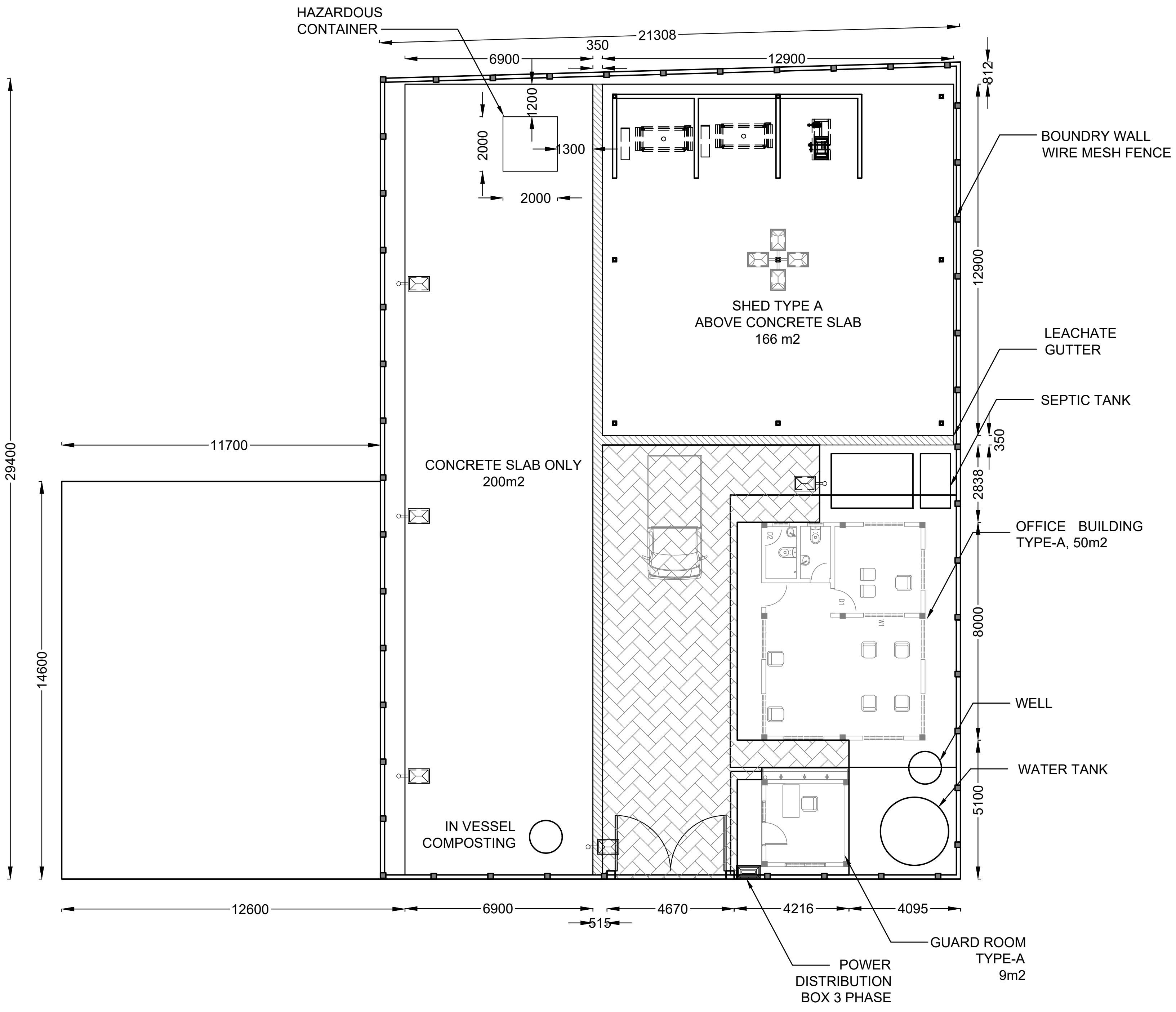
HAZARDOUS CONTAINER
21308
350
6900
12900
812
1200
2000
1300
2000
BOUNDRY WALL WIRE MESH FENCE
12900
SHED TYPE A ABOVE CONCRETE SLAB 166 m2
LEACHATE GUTTER
SEPTIC TANK
350
2838
29400
11700
CONCRETE SLAB ONLY 200m2
OFFICE BUILDING TYPE-A, 50m2
14600
8000
WELL
WATER TANK
5100
IN VESSEL COMPOSTING
12600
6900
4670
4216
4095
515
GUARD ROOM TYPE-A 9m2
POWER DISTRIBUTION BOX 3 PHASE

SITE LAYOUT - A Dh. MAHIBADHOO

1:200

Ministry of Environment, Climate
Change and Technology
Green Building, Handhuvareehigun
Rep of Maldives

KOCKS
INGENIEURE
KOCKS CONSULT GMBH
Stegemannstr. 32-38
Tel: +49 261 1302-400
Email: info@kocks-ing.de

WS
WATER SOLUTIONS PVT LTD
4th FL, M. Niadhurumaage
Tel: +960 3341643
Email: info@water-solutions.biz

Construction of Island Waste
Management Centers
A Dh. Mahibadhoo

Site Layout

DESIGNED	KASDARLI
DRAFTED	JALEEL
CHECKED	FAYAZ
PROJECT#	213-98616

AMMENDMENTS

DESIGN

Scale	Paper
AS GIVEN	A3

Drawing No.

1

Construction of
Island Waste Management Center

GENERAL COMPONENTS DETAILS

Ministry of Environment, Climate Change and Technology
Green Building, Handhuvareehigun
Rep of Maldives

KOCKS INGENIEURE
KOCKS CONSULT GMBH
Stegemannstr. 32-38
Tel: +49 261 1302-400
Email: info@kocks-ing.de

WS
WATER SOLUTIONS PVT LTD
4th FL, M. Niadhurumaage
Tel: +960 3341643
Email: info@water-solutions.biz

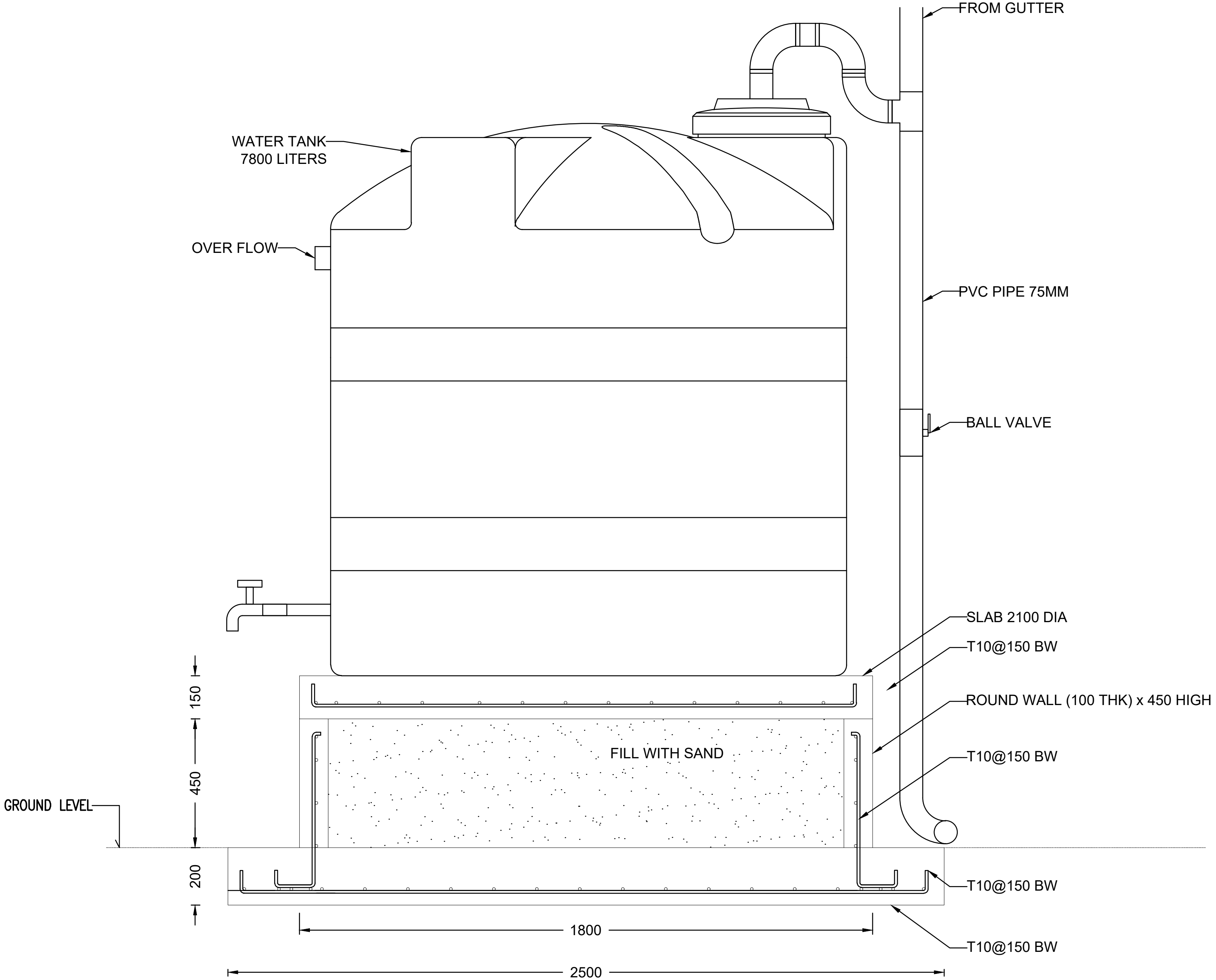
FROM GUTTER
WATER TANK
7800 LITERS
OVER FLOW
PVC PIPE 75MM
BALL VALVE
SLAB 2100 DIA
T10@150 BW
ROUND WALL (100 THK) x 450 HIGH
FILL WITH SAND
T10@150 BW
GROUND LEVEL
150
450
200
T10@150 BW
T10@150 BW
1800
2500

WATER TANK FOUNDATION

1:20

Ministry of Environment, Climate Change and Technology
Green Building, Handhuvareehigun
Rep of Maldives

KOCKS INGENIEURE
KOCKS CONSULT GMBH
Stegemannstr. 32-38
Tel: +49 261 1302-400
Email: info@kocks-ing.de

WS
WATER SOLUTIONS PVT LTD
4th FL, M. Niadhurumaage
Tel: +960 3341643
Email: info@water-solutions.biz

Construction of Island Waste Management Centers

GENERAL COMPONENTS DETAILS
WATER TANK

DESIGNED	KASDARLI
DRAFTED	JALEEL
CHECKED	FAYAZ
PROJECT#	213-98616

AMMENDMENTS

DESIGN

Scale	Paper
AS GIVEN	A4

Drawing No.
1

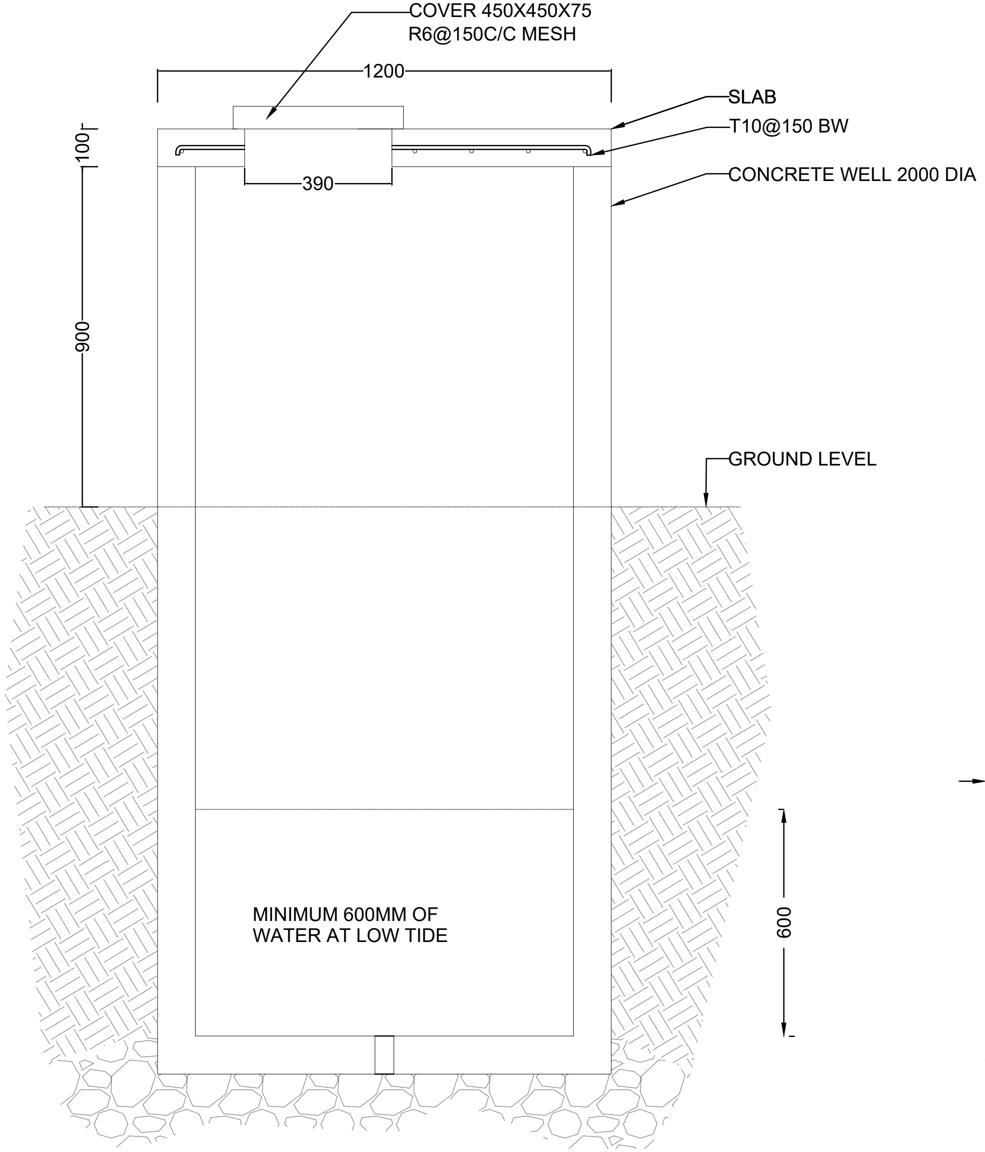
COVER 450X450X75
R6@150C/C MESH
1200
SLAB
T10@150 BW
100
390
CONCRETE WELL 2000 DIA
900
GROUND LEVEL
MINIMUM 600MM OF
WATER AT LOW TIDE
600

WELL SECTION

1:20

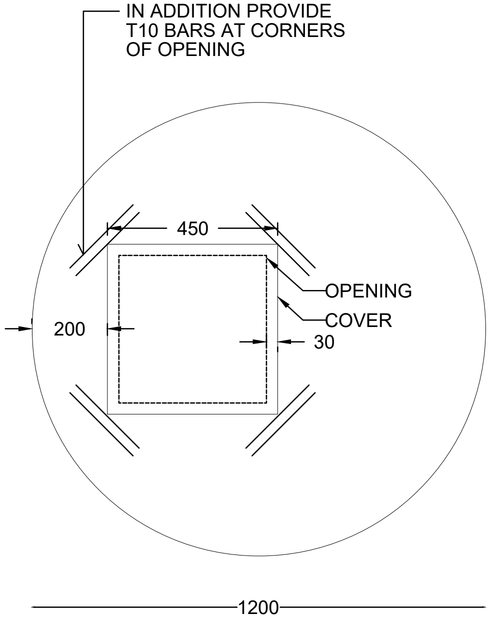
IN ADDITION PROVIDE
T10 BARS AT CORNERS
OF OPENING
450
OPENING
COVER
200
30
1200

WELL PLAN

1:20

Ministry of Environment, Climate
Change and Technology
Green Building, Handhuvareehigun
Rep of Maldives

KOCKS CONSULT GMBH
Stegemannstr. 32-38
Tel: +49 261 1302-400
Email: info@kocks-ing.de

WATER SOLUTIONS PVT LTD
4th FL, M. Niadhurumaage
Tel: +960 3341643
Email: info@water-solutions.biz

Construction of Island Waste
Management Centers

GENERAL COMPONENTS DETAILS
WELL

DESIGNED	KASDARLI
DRAFTED	JALEEL
CHECKED	FAYAZ
PROJECT#	213-98616

AMMENDMENTS

DESIGN

Scale	Paper
AS GIVEN	A4

Drawing No.

2

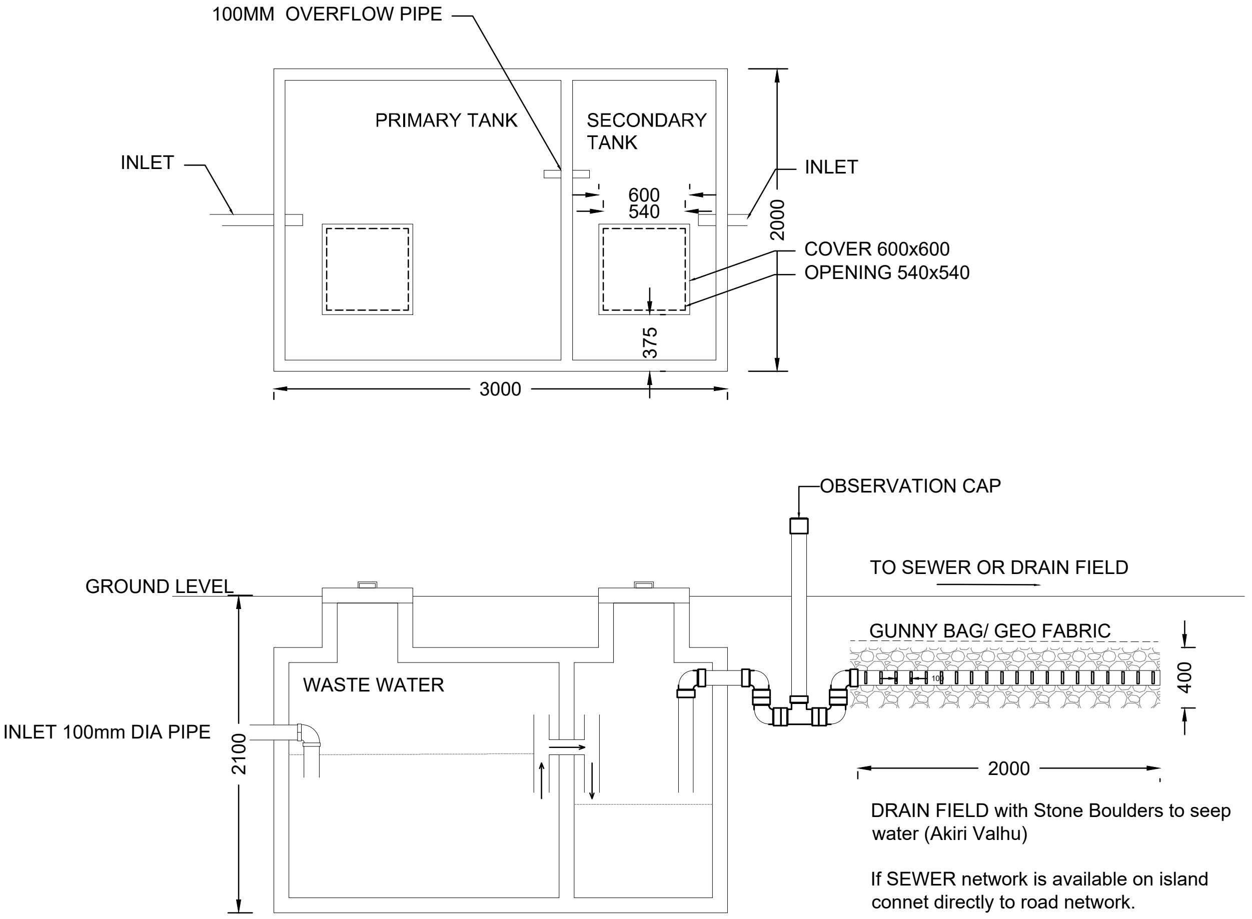
100MM OVERFLOW PIPE
PRIMARY TANK
SECONDARY TANK
INLET
INLET
600
540
2000
COVER 600x600
OPENING 540x540
375
3000
OBSERVATION CAP
TO SEWER OR DRAIN FIELD
GROUND LEVEL
GUNNY BAG/ GEO FABRIC
WASTE WATER
INLET 100mm DIA PIPE
2100
400
2000

DRAIN FIELD with Stone Boulders to seep water (Akiri Valhu)

If SEWER network is available on island connet directly to road network.

SEPTIC TANK

1:50

Ministry of Environment, Climate Change and Technology
Green Building, Handhuvareehigun
Rep of Maldives

KOCKS INGENIEURE
KOCKS CONSULT GMBH
Stegemannstr. 32-38
Tel: +49 261 1302-400
Email: info@kocks-ing.de

WATER SOLUTIONS PVT LTD
4th FL, M. Niadhurumaage
Tel: +960 3341643
Email: info@water-solutions.biz

Construction of Island Waste Management Centers

GENERAL COMPONENTS DETAILS
SEPTIC TANK

DESIGNED	KASDARLI
DRAFTED	JALEEL
CHECKED	FAYAZ
PROJECT#	213-98616

AMMENDMENTS

DESIGN

Scale	Paper
AS GIVEN	A4

Drawing No.
3

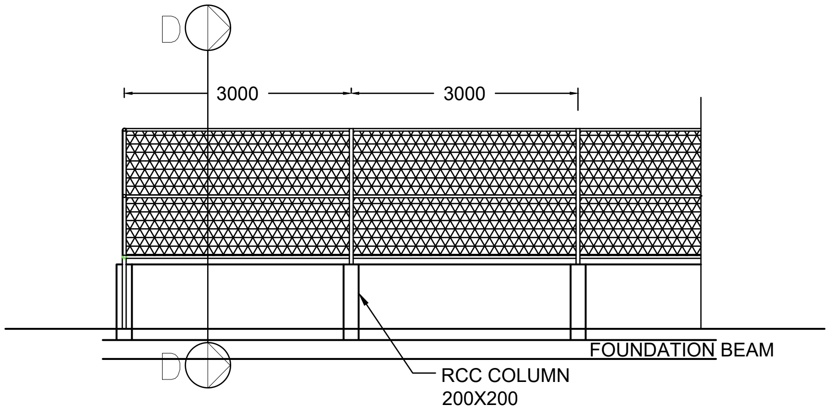
D
D
3000
3000
FOUNDATION BEAM
RCC COLUMN
200X200

GI PIPE & WIRE MESH FENCE

1:100

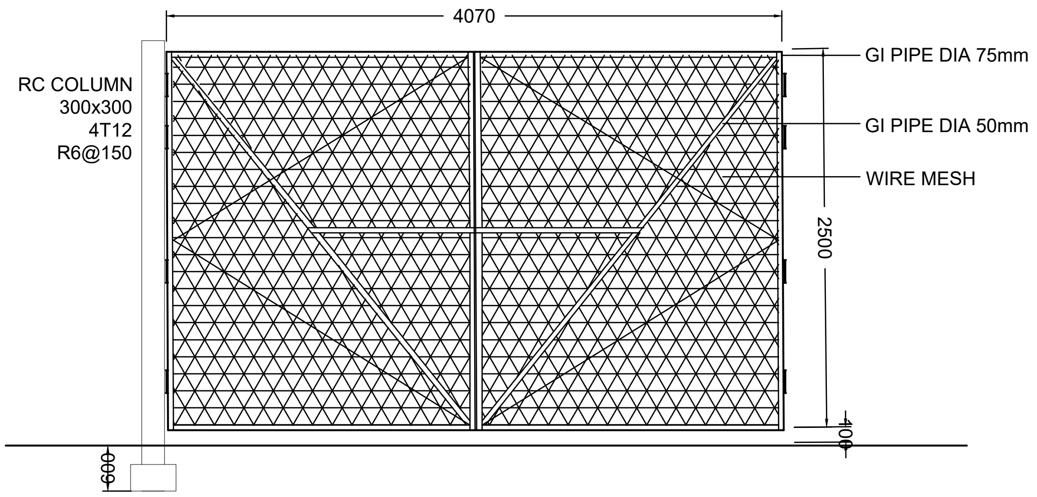
4070
RC COLUMN
300x300
4T12
R6@150
GI PIPE DIA 75mm
GI PIPE DIA 50mm
WIRE MESH
2500
100
600
FOOTING 600x600x350
T10@150 c/c B/W

MAIN GATE

1:50

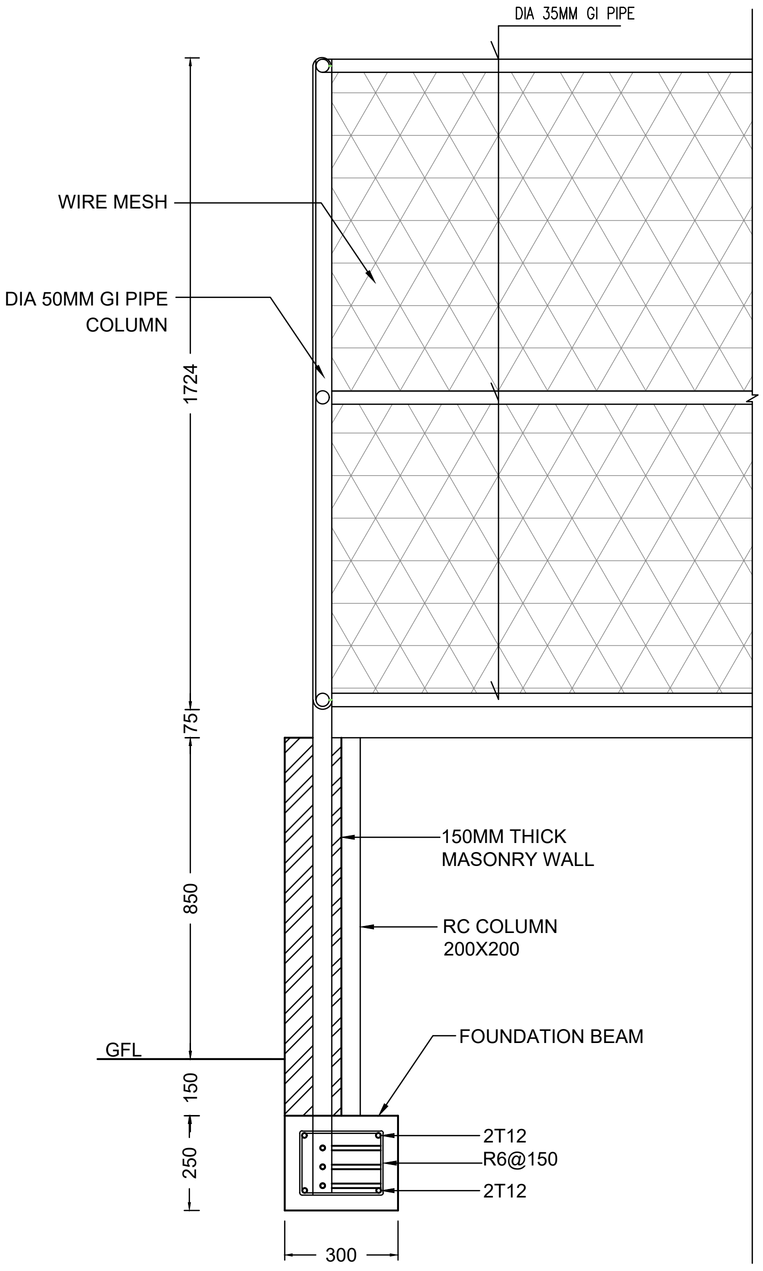
DIA 35MM GI PIPE
WIRE MESH
DIA 50MM GI PIPE
COLUMN
1724
175
850
150
250
GFL
150MM THICK
MASONRY WALL
RC COLUMN
200X200
FOUNDATION BEAM
2T12
R6@150
2T12
300

SECTION D-D

1:20

Ministry of Environment, Climate
Change and Technology
Green Building, Handhuvareehigun
Rep of Maldives

KOCKS CONSULT GMBH
Stegemannstr. 32-38
Tel: +49 261 1302-400
Email: info@kocks-ing.de

WATER SOLUTIONS PVT LTD
4th FL, M. Niadhurumaage
Tel: +960 3341643
Email: info@water-solutions.biz

Construction of Island Waste Management Centers

GENERAL COMPONENTS DETAILS
FENCE & GATE

DESIGNED	KASDARLI
DRAFTED	JALEEL
CHECKED	FAYAZ
PROJECT#	213-98616

AMMENDMENTS

DESIGN

Scale	Paper
AS GIVEN	A4

Drawing No.

4

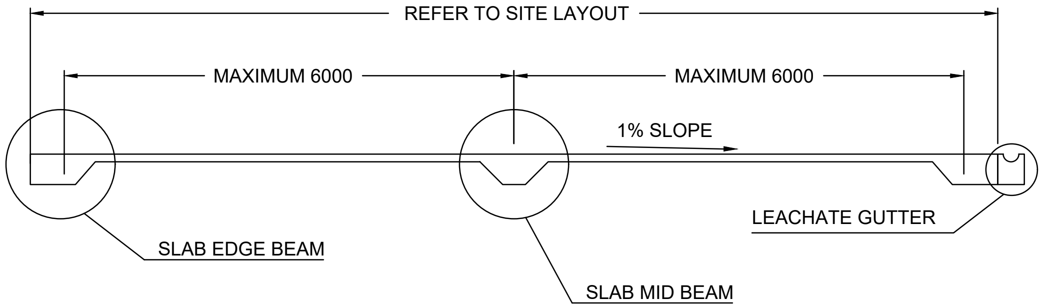
REFER TO SITE LAYOUT
MAXIMUM 6000
MAXIMUM 6000
1% SLOPE
LEACHATE GUTTER
SLAB EDGE BEAM
SLAB MID BEAM

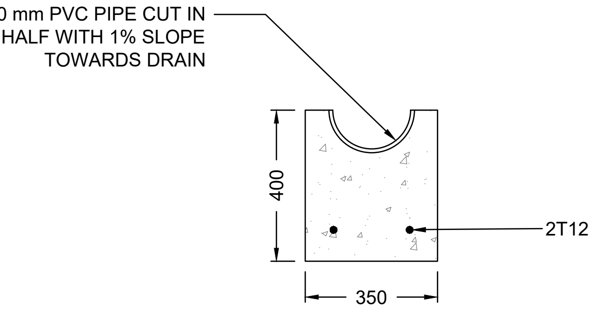
100 mm PVC PIPE CUT IN
HALF WITH 1% SLOPE
TOWARDS DRAIN
400
2T12
350

LEACHATE GUTTER DETAILS

1:20

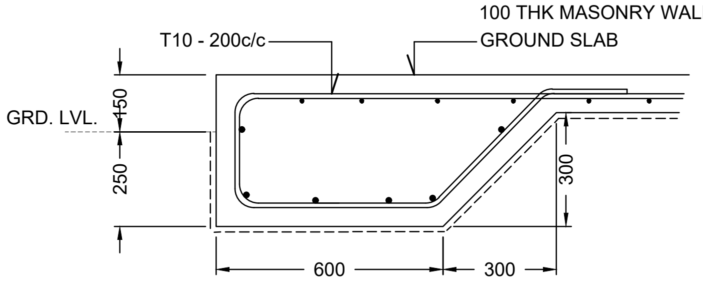
100 THK MASONRY WALL
T10 - 200c/c
GROUND SLAB
GRD. LVL.
150
250
300
600
300

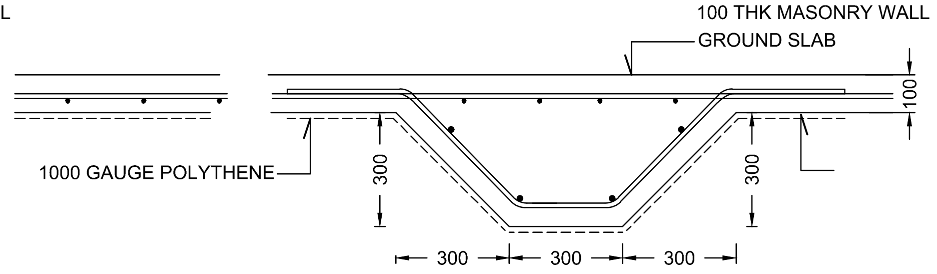
100 THK MASONRY WALL
GROUND SLAB
100
1000 GAUGE POLYTHENE
300
300
300
300
300

SLAB EDGE BEAM

1:20

SLAB MID BEAM

1:20

NOTE: For office and guardroom floor, refer to SECTION-S
Cover 50mm

CONCRETE SLAB DETAILS - Shed, Hazardous waste & Slab only areas

1:20

Ministry of Environment, Climate Change and Technology
Green Building, Handhuvareehigun
Rep of Maldives

KOCKS INGENIEURE
KOCKS CONSULT GMBH
Stegemannstr. 32-38
Tel: +49 261 1302-400
Email: info@kocks-ing.de

WS
WATER SOLUTIONS PVT LTD
4th FL, M. Niadhurumaage
Tel: +960 3341643
Email: info@water-solutions.biz

Construction of Island Waste Management Centers

GENERAL COMPONENTS DETAILS
TYPICAL FLOOR SLAB

DESIGNED	KASDARLI
DRAFTED	JALEEL
CHECKED	FAYAZ
PROJECT#	213-98616

AMMENDMENTS

DESIGN

Scale	Paper
AS GIVEN	A4

Drawing No.
5

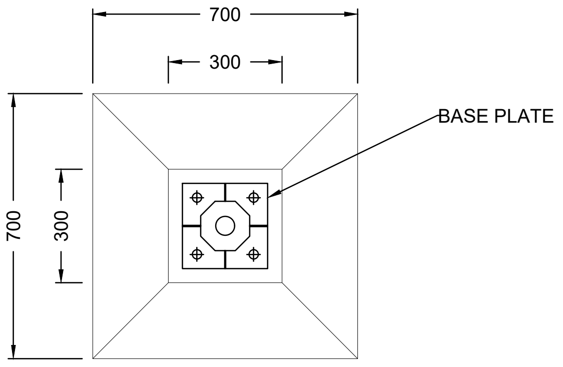
700
300
700
300
BASE PLATE

PLAN

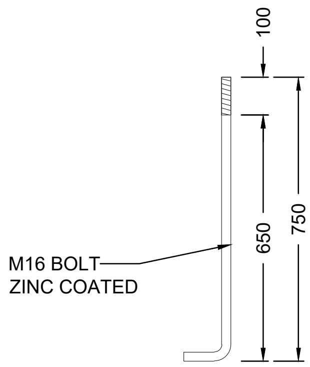
100
650
750
M16 BOLT
ZINC COATED

BOLT

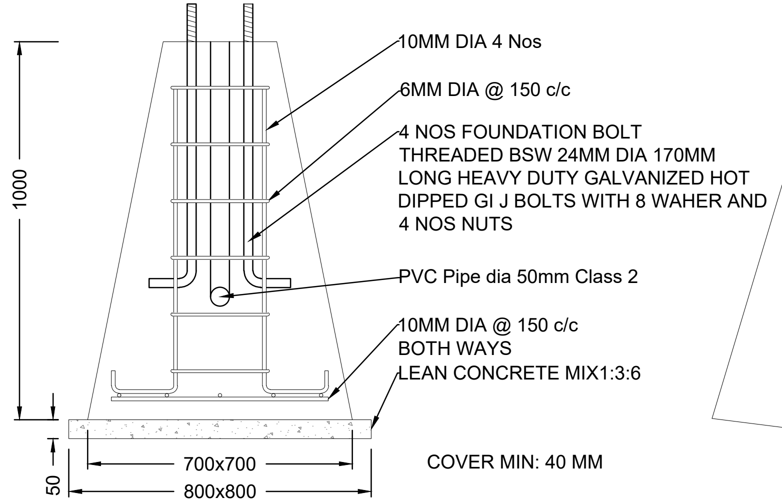
1000
50
10MM DIA 4 Nos
6MM DIA @ 150 c/c
4 NOS FOUNDATION BOLT
THREADED BSW 24MM DIA 170MM
LONG HEAVY DUTY GALVANIZED HOT
DIPPED GI J BOLTS WITH 8 WAHER AND
4 NOS NUTS
PVC Pipe dia 50mm Class 2
10MM DIA @ 150 c/c
BOTH WAYS
LEAN CONCRETE MIX1:3:6
700x700
800x800
COVER MIN: 40 MM

SIDE ELEVATION

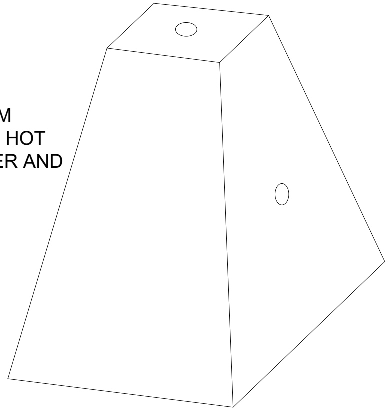

ISOMETRIC VIEW

LIGHT FOOTING

1:20

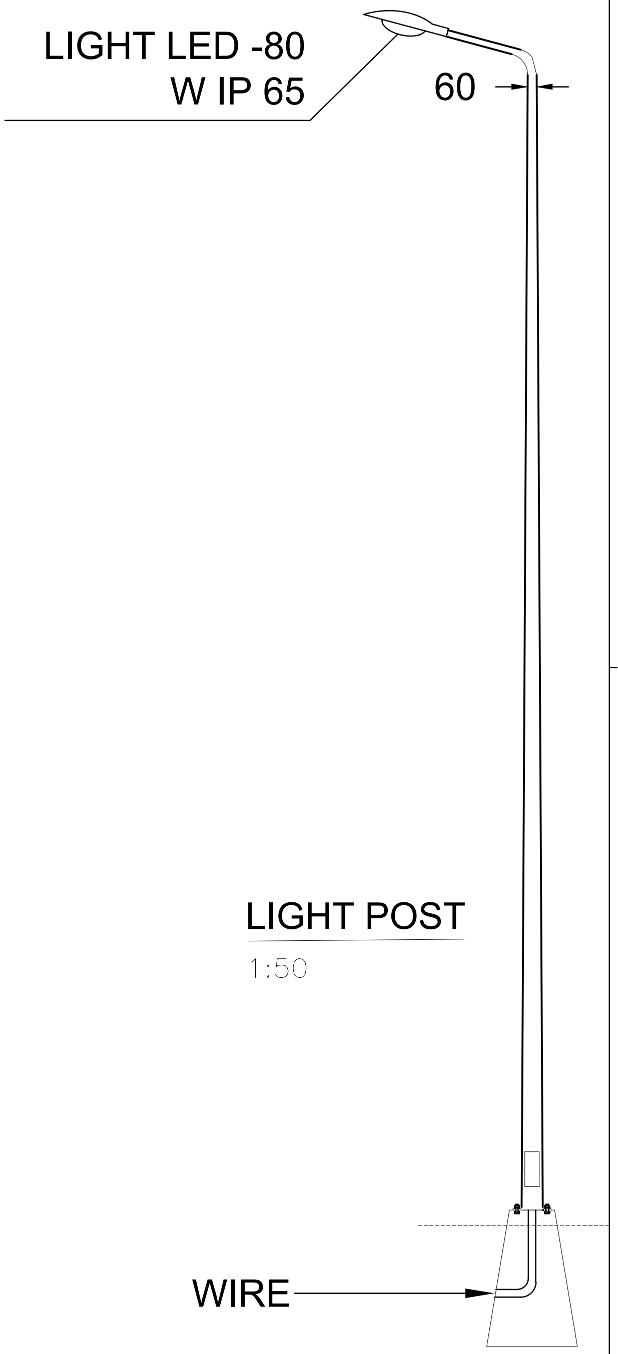
LIGHT LED -80
W IP 65
60
WIRE

LIGHT POST

1:50

Ministry of Environment, Climate Change and Technology
Green Building, Handhuvareehigun
Rep of Maldives

KOCKS CONSULT GMBH
Stegemannstr. 32-38
Tel: +49 261 1302-400
Email: info@kocks-ing.de

WATER SOLUTIONS PVT LTD
4th FL, M. Niadhurumaage
Tel: +960 3341643
Email: info@water-solutions.biz

Construction of Island Waste Management Centers

GENERAL COMPONENTS DETAILS
LIGHT POST

DESIGNED	KASDARLI
DRAFTED	JALEEL
CHECKED	FAYAZ
PROJECT#	213-98616

AMMENDMENTS

DESIGN

Scale	Paper
AS GIVEN	A4

Drawing No.
6

Construction of
Island Waste Management Center

GUARD ROOM TYPE-A

Ministry of Environment, Climate Change and Technology
Green Building, Handhuvareehigun
Rep of Maldives

KOCKS
INGENIEURE

KOCKS CONSULT GMBH
Stegemannstr. 32-38
Tel: +49 261 1302-400
Email: info@kocks-ing.de

WATER SOLUTIONS PVT LTD
4th FL, M. Niadhurumaage
Tel: +960 3341643
Email: info@water-solutions.biz

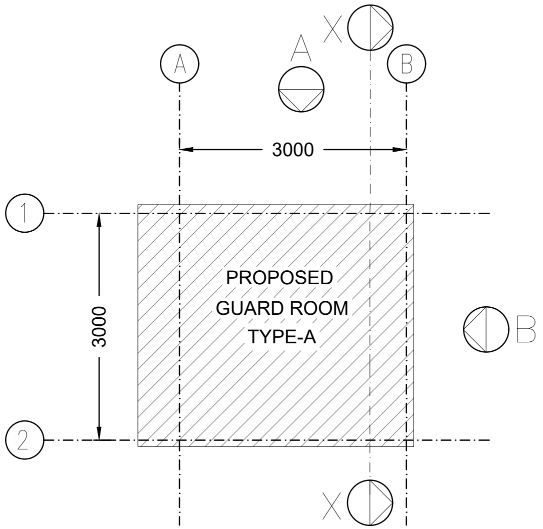
A
B
X
A
3000
1
2
3000
PROPOSED
GUARD ROOM
TYPE-A
B
X

SITE PLAN

1:100

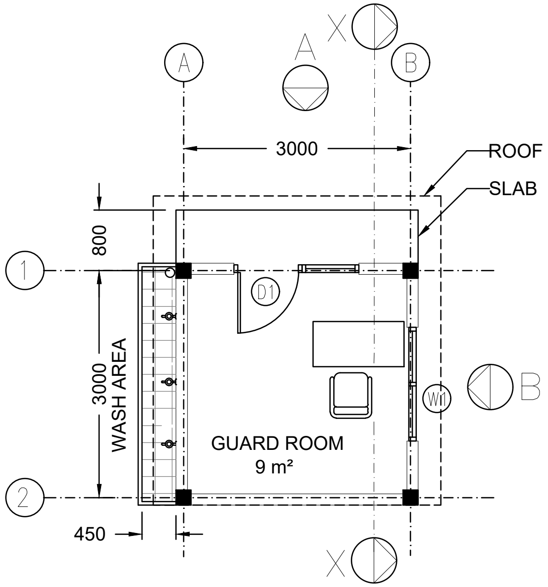
A
X
A
B
3000
ROOF
SLAB
800
1
D1
3000
WASH AREA
W1
B
GUARD ROOM
9 m²
2
450
X

GROUND FLOOR LAYOUT PLAN

1:100

Ministry of Environment, Climate
Change and Technology
Green Building, Handhuvareehigun
Rep of Maldives

KOCKS CONSULT GMBH
Stegemannstr. 32-38
Tel: +49 261 1302-400
Email: info@kocks-ing.de

WATER SOLUTIONS PVT LTD
4th FL, M. Niadhurumaage
Tel: +960 3341643
Email: info@water-solutions.biz

Construction of Island Waste
Management Centers

GUARD ROOM
TYPE-A

DESIGNED	KASDARLI
DRAFTED	JALEEL
CHECKED	FAYAZ
PROJECT#	213-98616

AMMENDMENTS

DESIGN

Scale	Paper
AS GIVEN	A4

Drawing No.

1

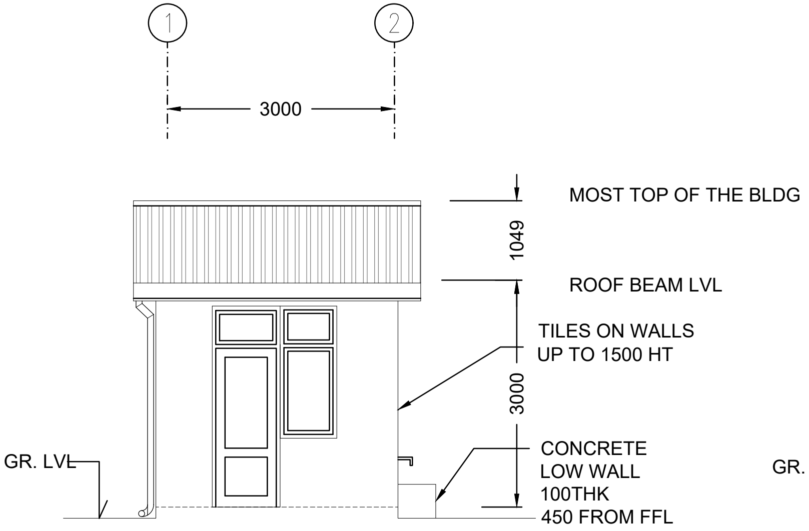
1
2
3000
MOST TOP OF THE BLDG
1049
ROOF BEAM LVL
TILES ON WALLS
UP TO 1500 HT
3000
GR. LVL
CONCRETE
LOW WALL
100THK
450 FROM FFL

ELEVATION A

1:100

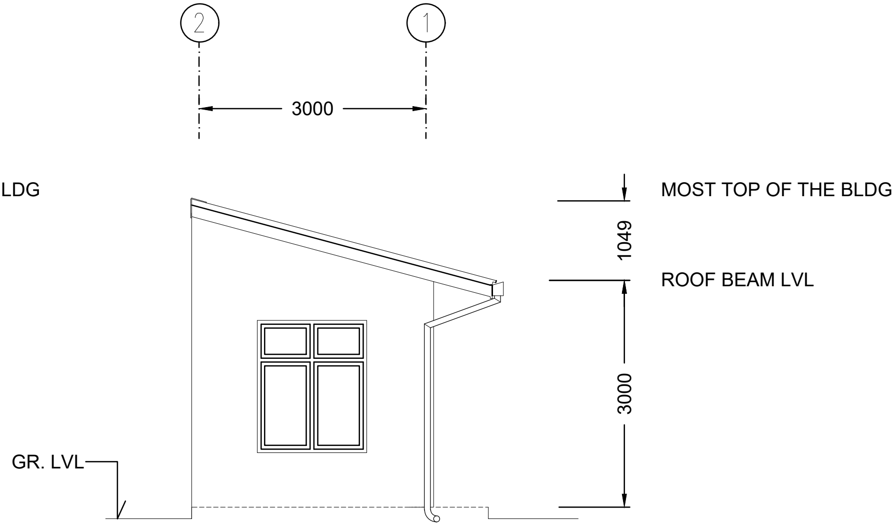
2
1
3000
MOST TOP OF THE BLDG
1049
ROOF BEAM LVL
3000
GR. LVL

ELEVATION B

1:100

Ministry of Environment, Climate Change and Technology
Green Building, Handhuvareehigun
Rep of Maldives

KOCKS INGENIEURE
KOCKS CONSULT GMBH
Stegemannstr. 32-38
Tel: +49 261 1302-400
Email: info@kocks-ing.de

WATER SOLUTIONS PVT LTD
4th FL, M. Niadhurumaage
Tel: +960 3341643
Email: info@water-solutions.biz

Construction of Island Waste Management Centers

GUARD ROOM
TYPE-A

DESIGNED	KASDARLI
DRAFTED	JALEEL
CHECKED	FAYAZ
PROJECT#	213-98616

AMMENDMENTS

DESIGN

Scale	Paper
AS GIVEN	A4

Drawing No.

2

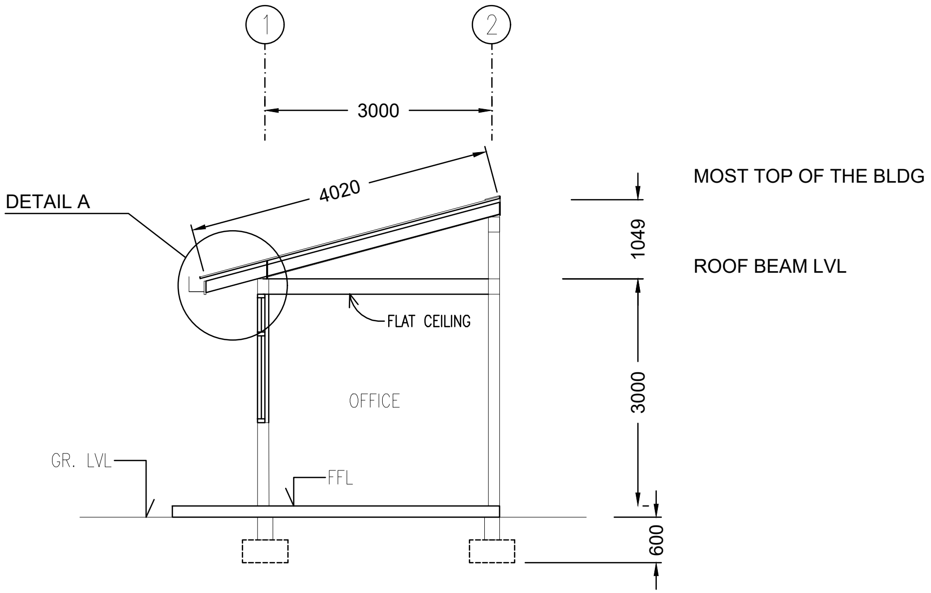
1
2
3000
4020
DETAIL A
1049
MOST TOP OF THE BLDG
ROOF BEAM LVL
FLAT CEILING
OFFICE
3000
GR. LVL
FFL
600

SECTION X-X

1:100

Ministry of Environment, Climate Change and Technology
Green Building, Handhuvareehigun
Rep of Maldives

KOCKS INGENIEURE
KOCKS CONSULT GMBH
Stegemannstr. 32-38
Tel: +49 261 1302-400
Email: info@kocks-ing.de

WS
WATER SOLUTIONS PVT LTD
4th FL, M. Niadhurumaage
Tel: +960 3341643
Email: info@water-solutions.biz

Construction of Island Waste Management Centers

GUARD ROOM
TYPE-A

DESIGNED	KASDARLI
DRAFTED	JALEEL
CHECKED	FAYAZ
PROJECT#	213-98616

AMMENDMENTS

DESIGN

Scale	Paper
AS GIVEN	A4

Drawing No.

3

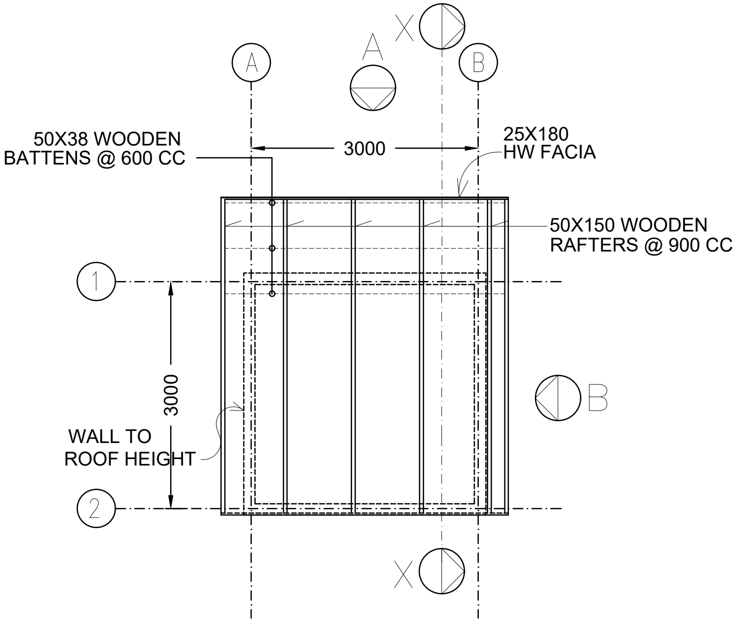

A
X
A
B
50X38 WOODEN
BATTENS @ 600 CC
3000
25X180
HW FACIA
50X150 WOODEN
RAFTERS @ 900 CC
1
3000
B
WALL TO
ROOF HEIGHT
2
X

ROOF STRUCTURE PLAN

1:100

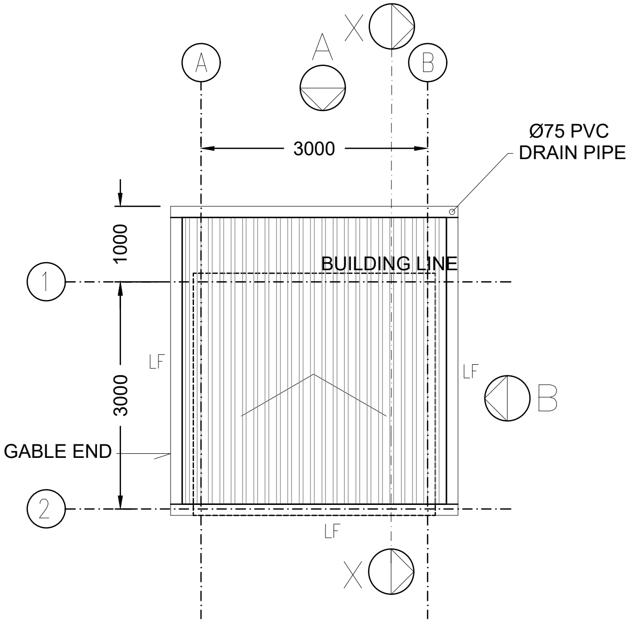

A
X
A
B
Ø75 PVC
DRAIN PIPE
3000
1000
BUILDING LINE
1
LF
3000
LF
B
GABLE END
2
LF
X

ROOF LAYOUT PLAN

1:100

LF: LONGITUDINAL FLASHING

Ministry of Environment, Climate Change and Technology
Green Building, Handhuvareehigun
Rep of Maldives

KOCKS CONSULT GMBH
Stegemannstr. 32-38
Tel: +49 261 1302-400
Email: info@kocks-ing.de

WATER SOLUTIONS PVT LTD
4th FL, M. Niadhurumaage
Tel: +960 3341643
Email: info@water-solutions.biz

Construction of Island Waste Management Centers

GUARD ROOM
TYPE-A

DESIGNED	KASDARLI
DRAFTED	JALEEL
CHECKED	FAYAZ
PROJECT#	213-98616

AMMENDMENTS

DESIGN

Scale	Paper
AS GIVEN	A4

Drawing No.
4

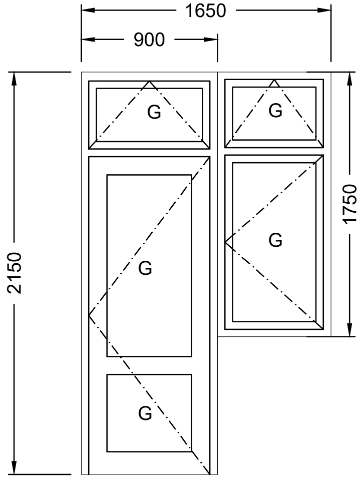

D1

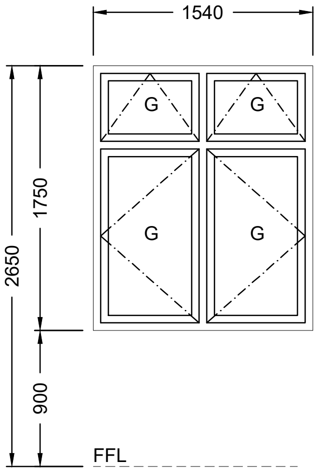

W1

G: 6MM THK CLEAR GLASS

ALL DOORS AND WINDOWS SHOULD BE ALUMINIUM FRAME WITH POWDER COATED WHITE FINISH

DOOR / WINDOW

1:50

Ministry of Environment, Climate Change and Technology
Green Building, Handhuvareehigun
Rep of Maldives

KOCKS INGENIEURE
KOCKS CONSULT GMBH
Stegemannstr. 32-38
Tel: +49 261 1302-400
Email: info@kocks-ing.de

WS
WATER SOLUTIONS PVT LTD
4th FL, M. Niadhurumaage
Tel: +960 3341643
Email: info@water-solutions.biz

Construction of Island Waste Management Centers

GUARD ROOM
TYPE-A

DESIGNED	KASDARLI
DRAFTED	JALEEL
CHECKED	FAYAZ
PROJECT#	213-98616

AMMENDMENTS

DESIGN

Scale	Paper
AS GIVEN	A4

Drawing No.
5

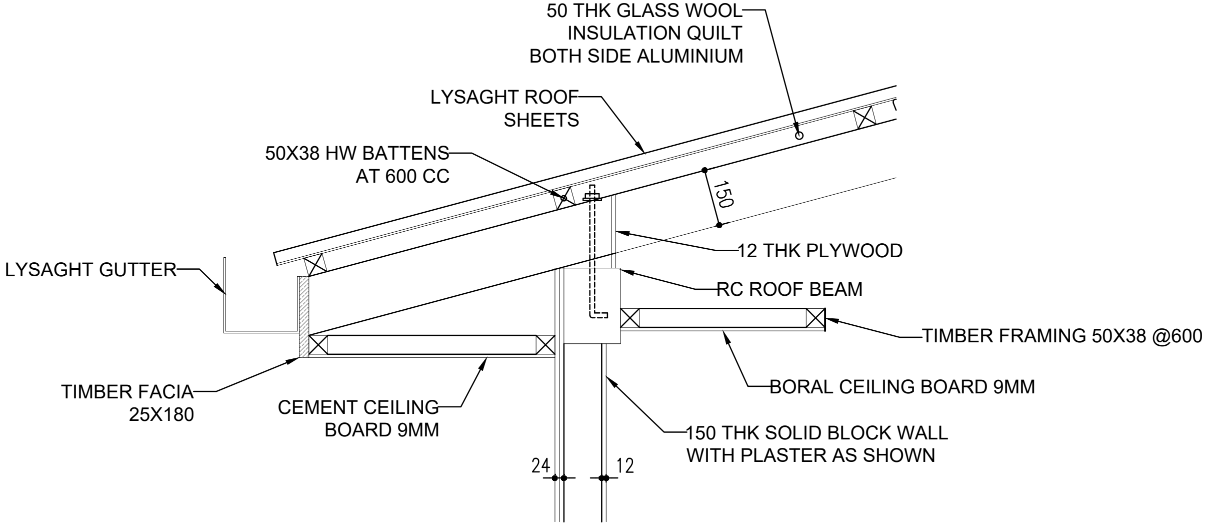
50 THK GLASS WOOL
INSULATION QUILT
BOTH SIDE ALUMINIUM
LYSAGHT ROOF
SHEETS
50X38 HW BATTENS
AT 600 CC
150
LYSAGHT GUTTER
12 THK PLYWOOD
RC ROOF BEAM
TIMBER FRAMING 50X38 @600
TIMBER FACIA
25X180
CEMENT CEILING
BOARD 9MM
BORAL CEILING BOARD 9MM
150 THK SOLID BLOCK WALL
WITH PLASTER AS SHOWN
24
12

DETAIL A

1:20

Ministry of Environment, Climate
Change and Technology
Green Building, Handhuvareehigun
Rep of Maldives

KOCKS
INGENIEURE
KOCKS CONSULT GMBH
Stegemannstr. 32-38
Tel: +49 261 1302-400
Email: info@kocks-ing.de

WS
WATER SOLUTIONS PVT LTD
4th FL, M. Niadhurumaage
Tel: +960 3341643
Email: info@water-solutions.biz

Construction of Island Waste
Management Centers

GUARD ROOM
TYPE-A

DESIGNED	KASDARLI
DRAFTED	JALEEL
CHECKED	FAYAZ
PROJECT#	213-98616

AMMENDMENTS

DESIGN

Scale	Paper
AS GIVEN	A4

Drawing No.
6

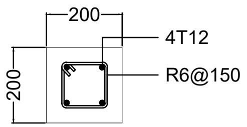
200
200
4T12
R6@150

C1

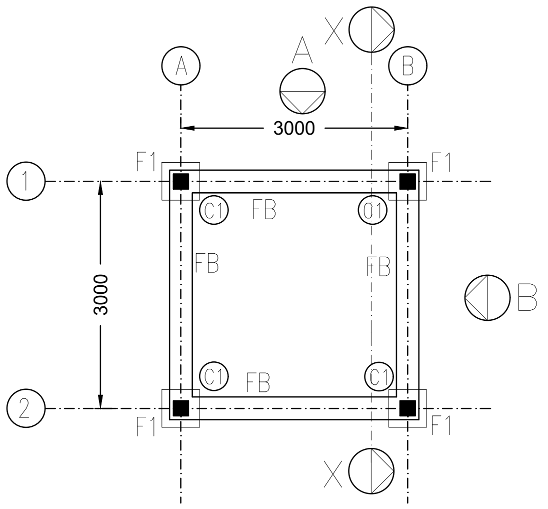
A
B
X
A
B
1
2
3000
3000
F1
F1
F1
F1
C1
C1
C1
C1
FB
FB
FB
FB

FOUNDATION LAYOUT PLAN

1:100

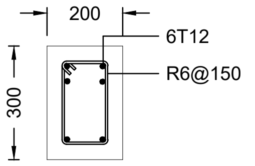
200
300
6T12
R6@150

FB

COVER

Foundations: 50mm

Columns : Below Ground 50mm, Above Ground 40mm

Ground Slab : 40mm

RB : 30mm

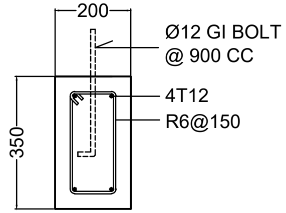
200
350
Ø12 GI BOLT
@ 900 CC
4T12
R6@150

RB1

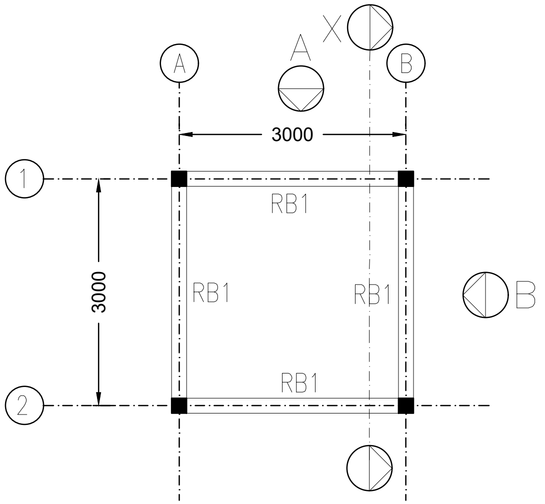
A
B
X
A
B
1
2
3000
3000
RB1
RB1
RB1
RB1

ROOF BEAM PLAN

1:100

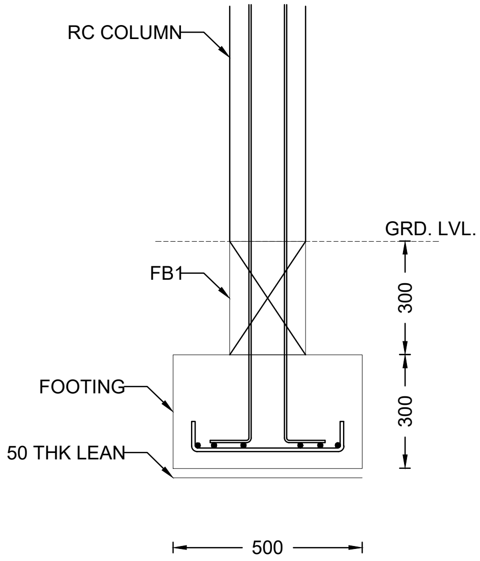
RC COLUMN
GRD. LVL.
FB1
300
300
FOOTING
50 THK LEAN
500

F1

PAD	SIZE	REINFORCEMENT
F1	500X500X300	T10@150 BW

Ministry of Environment, Climate Change and Technology
Green Building, Handhuvareehigun
Rep of Maldives

KOCKS INGENIEURE
KOCKS CONSULT GMBH
Stegemannstr. 32-38
Tel: +49 261 1302-400
Email: info@kocks-ing.de

WATER SOLUTIONS PVT LTD
4th FL, M. Niadhurumaage
Tel: +960 3341643
Email: info@water-solutions.biz

Construction of Island Waste Management Centers

GUARD ROOM
TYPE-A

DESIGNED	KASDARLI
DRAFTED	JALEEL
CHECKED	FAYAZ
PROJECT#	213-98616

AMMENDMENTS

DESIGN

Scale	Paper
AS GIVEN	A4

Drawing No.
7

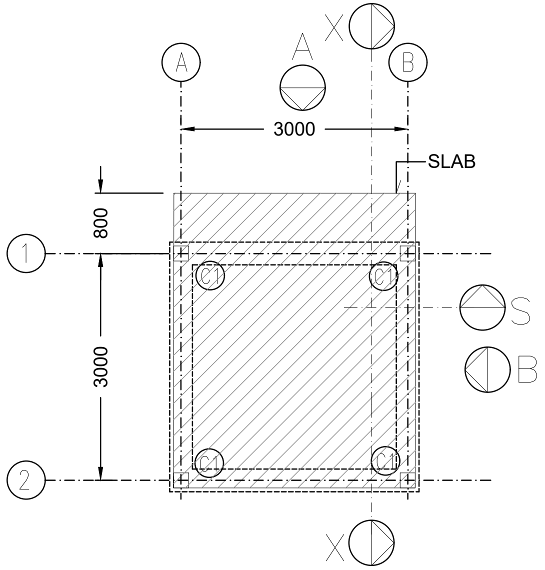
A
X
A
B
3000
SLAB
800
1
C1
C1
S
B
3000
C1
C1
2
X

GROUND SLAB LAYOUT PLAN

1:100

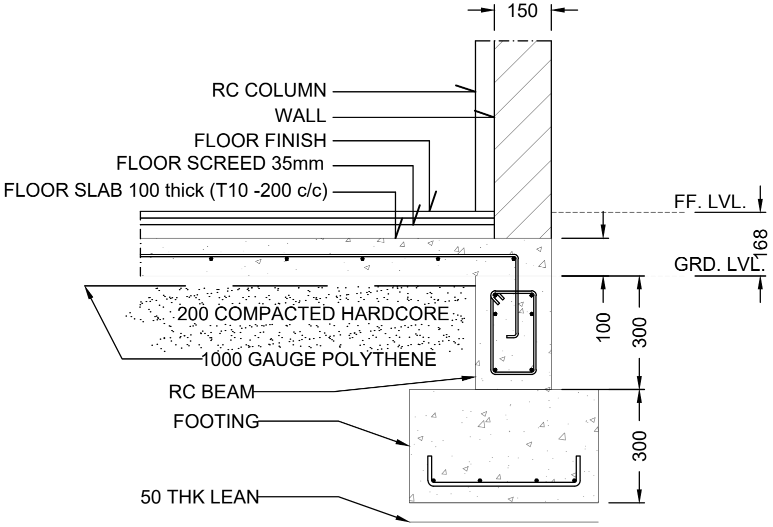
150
RC COLUMN
WALL
FLOOR FINISH
FLOOR SCREED 35mm
FLOOR SLAB 100 thick (T10 -200 c/c)
FF. LVL.
168
GRD. LVL.
200 COMPACTED HARDCORE
1000 GAUGE POLYTHENE
100
300
RC BEAM
FOOTING
300
50 THK LEAN

NOTES:

GROUND SLAB IS 100 THICK ON
1000 GAUGE POLYTHENE DPM ON
200 COMPACTED HARDCORE

SLAB RFMT: T10@200 BW

SECTION-S

1:20

Ministry of Environment, Climate
Change and Technology
Green Building, Handhuvareehigun
Rep of Maldives

KOCKS
INGENIEURE
KOCKS CONSULT GMBH
Stegemannstr. 32-38
Tel: +49 261 1302-400
Email: info@kocks-ing.de

WS
WATER SOLUTIONS PVT LTD
4th FL, M. Niadhurumaage
Tel: +960 3341643
Email: info@water-solutions.biz

Construction of Island Waste
Management Centers

GUARD ROOM
TYPE-A

DESIGNED	KASDARLI
DRAFTED	JALEEL
CHECKED	FAYAZ
PROJECT#	213-98616

AMMENDMENTS

DESIGN

Scale	Paper
AS GIVEN	A4

Drawing No.
8

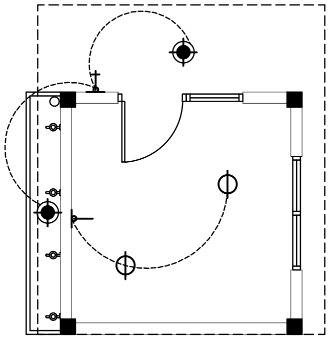

LIGHTING LAYOUT PLAN

1:100

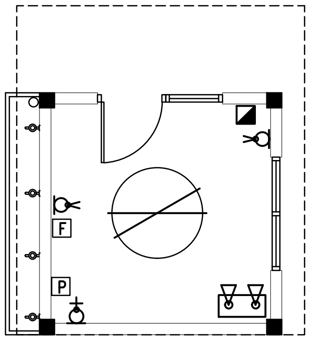

FAN & POWER LAYOUT PLAN

1:100

ELECTRICAL LEGEND

- ⊖ CEILING RECESSED E/S DOWN LIGHT
- ◉ WATERPROOF SPOTLIGHT LV HALOGEN
- EMERGENCY LIGHT(RECHARGEABLE)
- ONE-WAY SWITCH (SINGLE GANG)
- ONE-WAY SWITCH (DOUBLE GANG)
- TWO-WAY SWITCH (SINGLE GANG)
- WALL SOCKET OUTLET (DOUBLE GANG)
- SERVICE SOCKET OUTLET
- WATERPROOF WALL SOCKET OUTLET (SINGLE GANG)
- WATERPROOF SERVICE SOCKET OUTLET (SINGLE GANG) 1.8 H
- CEILING FAN 1.2M DIA
- ◪ D-BOARD
- P WELL WATER PUMP
- F FAN DIMMER

NOTE:

ALL HEIGHTS ARE FROM FINISHED FLOOR LEVEL

ALL WALL SOCKET OUTLETS ARE 0.3M AFFL EXCEPT WHERE STATED

ALL LIGHT SWITCHES ARE AT 1.2M AFFL

Ministry of Environment, Climate Change and Technology
Green Building, Handhuvareehigun
Rep of Maldives

KOCKS CONSULT GMBH
Stegemannstr. 32-38
Tel: +49 261 1302-400
Email: info@kocks-ing.de

WATER SOLUTIONS PVT LTD
4th FL, M. Niadhurumaage
Tel: +960 3341643
Email: info@water-solutions.biz

Construction of Island Waste Management Centers

GUARD ROOM
TYPE-A

DESIGNED	KASDARLI
DRAFTED	JALEEL
CHECKED	FAYAZ
PROJECT#	213-98616

AMMENDMENTS

DESIGN

Scale	Paper
AS GIVEN	A4

Drawing No.

9

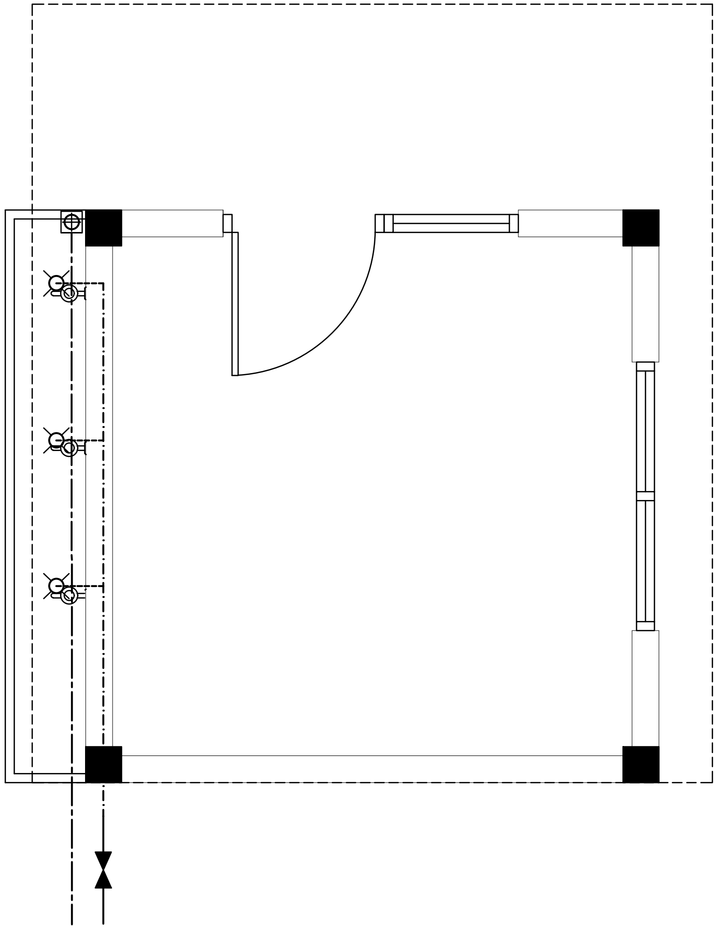

SEWAGE DISPOSAL AND WATER SUPPLY LAYOUT PLAN

PLUMBING LEGEND

FAUCET

DIA 100 DRAIN

CLEAN-OUT HATCH

GATE VALVE

DIA 100 WASTE PIPE

DIA 50 WASTE PIPE

DIA 12 COLD WATER SUPPLY

Ministry of Environment, Climate Change and Technology
Green Building, Handhuvareehigun
Rep of Maldives

KOCKS INGENIEURE
KOCKS CONSULT GMBH
Stegemannstr. 32-38
Tel: +49 261 1302-400
Email: info@kocks-ing.de

WS
WATER SOLUTIONS PVT LTD
4th FL, M. Niadhurumaage
Tel: +960 3341643
Email: info@water-solutions.biz

Construction of Island Waste Management Centers

GUARD ROOM
TYPE-A

DESIGNED	KASDARLI
DRAFTED	JALEEL
CHECKED	FAYAZ
PROJECT#	213-98616

AMMENDMENTS

DESIGN

Scale	Paper
AS GIVEN	A4

Drawing No.
10

Construction of
Island Waste Management Center

OFFICE BUILDING TYPE-A

Ministry of Environment, Climate Change and Technology
Green Building, Handhuvareehigun
Rep of Maldives

KOCKS INGENIEURE
KOCKS CONSULT GMBH
Stegemannstr. 32-38
Tel: +49 261 1302-400
Email: info@kocks-ing.de

WS
WATER SOLUTIONS PVT LTD
4th FL, M. Niadhurumaage
Tel: +960 3341643
Email: info@water-solutions.biz

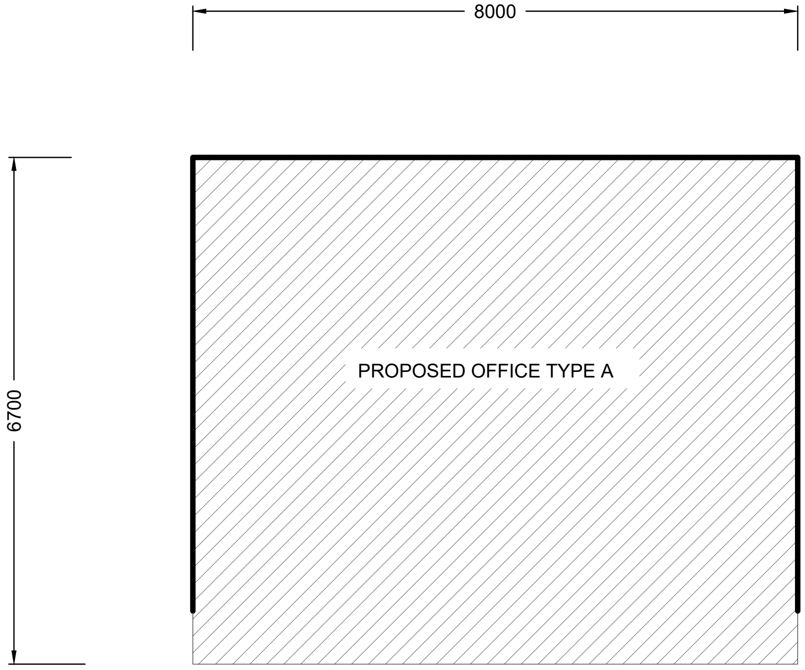

SITE PLAN

1:100

Ministry of Environment, Climate Change and Technology
Green Building, Handhuvareehigun
Rep of Maldives

KOCKS INGENIEURE
KOCKS CONSULT GMBH
Stegemannstr. 32-38
Tel: +49 261 1302-400
Email: info@kocks-ing.de

WS
WATER SOLUTIONS PVT LTD
4th FL, M. Niadhurumaage
Tel: +960 3341643
Email: info@water-solutions.biz

Construction of Island Waste Management Centers

OFFICE BUILDING
TYPE-A

DESIGNED	KASDARLI
DRAFTED	JALEEL
CHECKED	FAYAZ
PROJECT#	213-98616

AMMENDMENTS

DESIGN

Scale	Paper
AS GIVEN	A4

Drawing No.
1

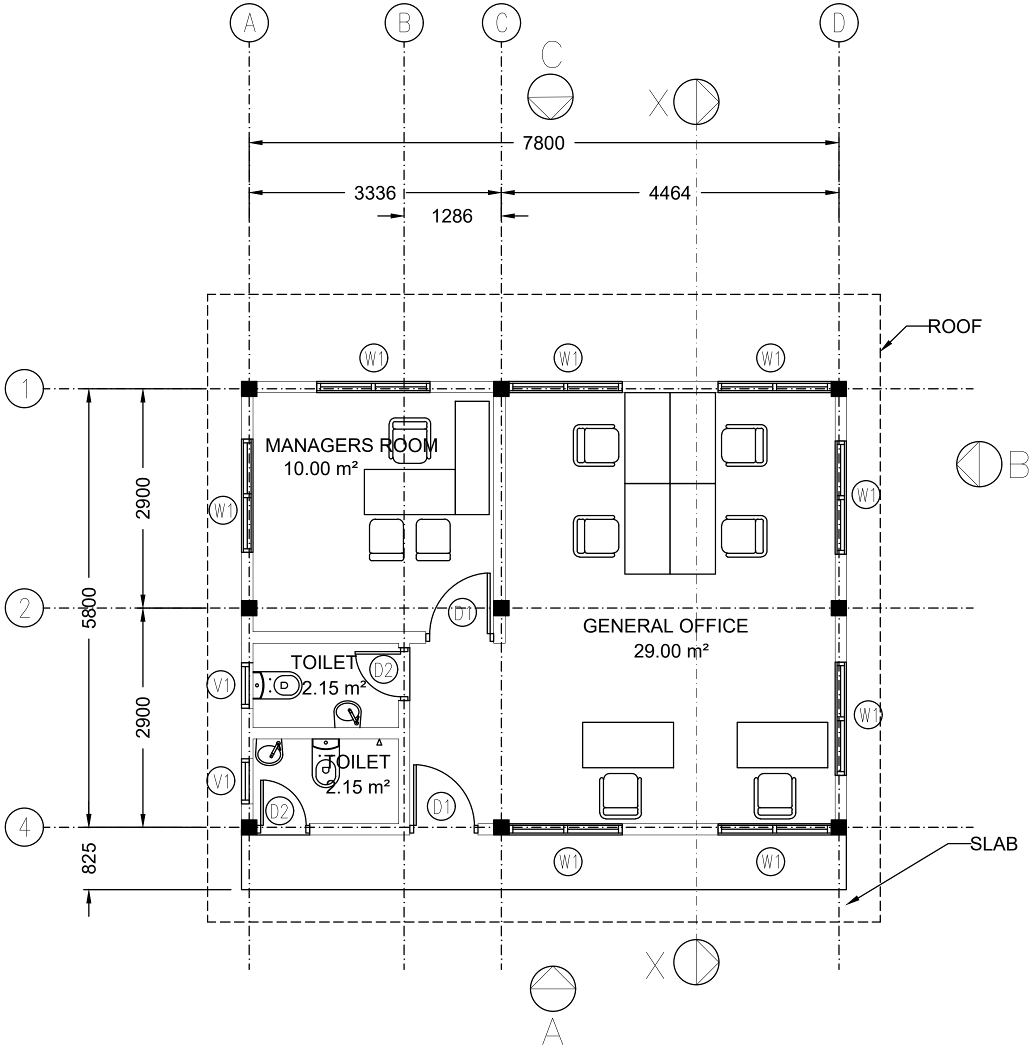
A
B
C
D
C
X
B
X
A
7800
3336
1286
4464
ROOF
1
2
4
2900
5800
2900
825
W1
V1
D1
D2
MANAGERS ROOM
10.00 m²
GENERAL OFFICE
29.00 m²
TOILET
2.15 m²
TOILET
2.15 m²
SLAB

GROUND FLOOR LAYOUT PLAN

1:100

Ministry of Environment, Climate Change and Technology
Green Building, Handhuvareehigun
Rep of Maldives

KOCKS CONSULT GMBH
Stegemannstr. 32-38
Tel: +49 261 1302-400
Email: info@kocks-ing.de

WATER SOLUTIONS PVT LTD
4th FL, M. Niadhurumaage
Tel: +960 3341643
Email: info@water-solutions.biz

Construction of Island Waste Management Centers

OFFICE BUILDING
TYPE-A

DESIGNED	KASDARLI
DRAFTED	JALEEL
CHECKED	FAYAZ
PROJECT#	213-98616

AMMENDMENTS

DESIGN

Scale	Paper
AS GIVEN	A4

Drawing No.
2

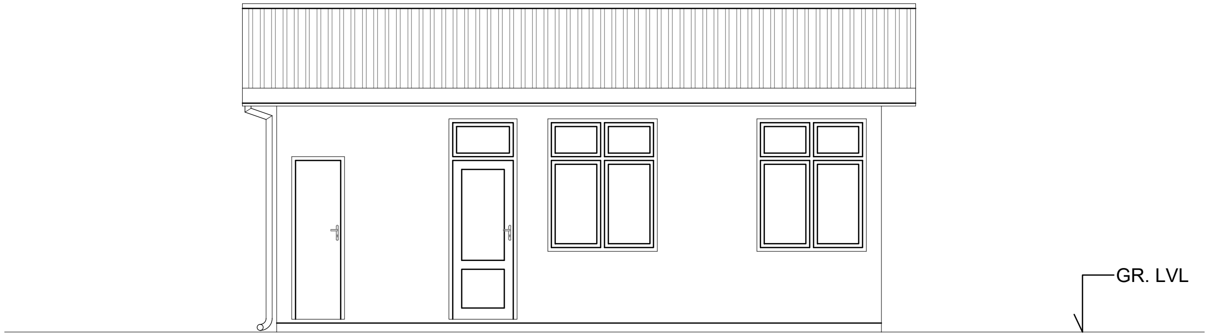

ELEVATION A

1:100

Ministry of Environment, Climate
Change and Technology
Green Building, Handhuvareehigun
Rep of Maldives

KOCKS CONSULT GMBH
Stegemannstr. 32-38
Tel: +49 261 1302-400
Email: info@kocks-ing.de

WATER SOLUTIONS PVT LTD
4th FL, M. Niadhurumaage
Tel: +960 3341643
Email: info@water-solutions.biz

Construction of Island Waste
Management Centers

OFFICE BUILDING
TYPE-A

DESIGNED KASDARLI
DRAFTED JALEEL
CHECKED FAYAZ
PROJECT# 213-98616

AMMENDMENTS

DESIGN

Scale
AS GIVEN

Paper
A4

Drawing No.
3

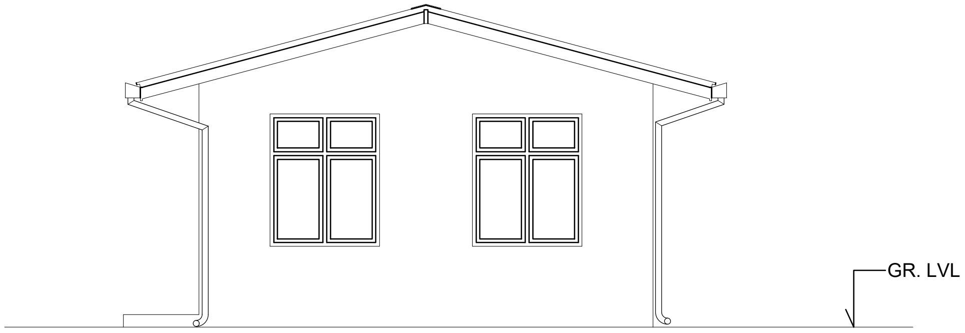

ELEVATION B

1:100

Ministry of Environment, Climate Change and Technology
Green Building, Handhuvareehigun
Rep of Maldives

KOCKS INGENIEURE
KOCKS CONSULT GMBH
Stegemannstr. 32-38
Tel: +49 261 1302-400
Email: info@kocks-ing.de

WS
WATER SOLUTIONS PVT LTD
4th FL, M. Niadhurumaage
Tel: +960 3341643
Email: info@water-solutions.biz

Construction of Island Waste Management Centers

OFFICE BUILDING
TYPE-A

DESIGNED	KASDARLI
DRAFTED	JALEEL
CHECKED	FAYAZ
PROJECT#	213-98616

AMMENDMENTS

DESIGN

Scale	Paper
AS GIVEN	A4

Drawing No.
4

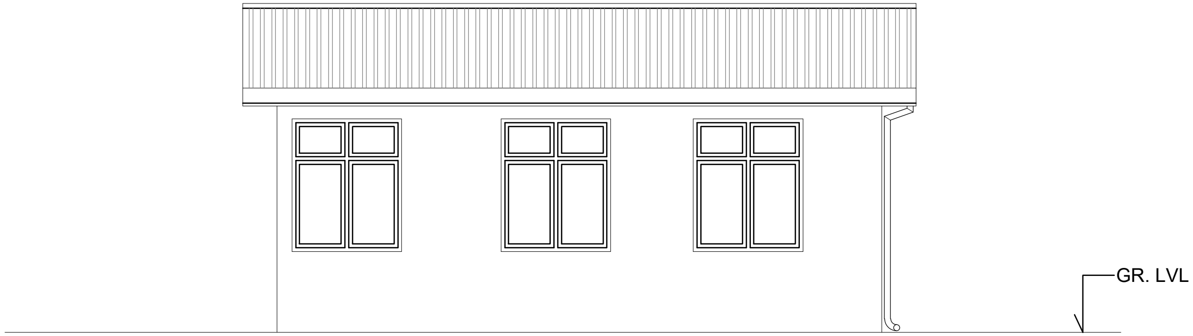

ELEVATION C

1:100

Ministry of Environment, Climate Change and Technology
Green Building, Handhuvareehigun
Rep of Maldives

KOCKS CONSULT GMBH
Stegemannstr. 32-38
Tel: +49 261 1302-400
Email: info@kocks-ing.de

WATER SOLUTIONS PVT LTD
4th FL, M. Niadhurumaage
Tel: +960 3341643
Email: info@water-solutions.biz

Construction of Island Waste Management Centers

OFFICE BUILDING
TYPE-A

DESIGNED	KASDARLI
DRAFTED	JALEEL
CHECKED	FAYAZ
PROJECT#	213-98616

AMMENDMENTS

DESIGN

Scale	Paper
AS GIVEN	A4

Drawing No.
5

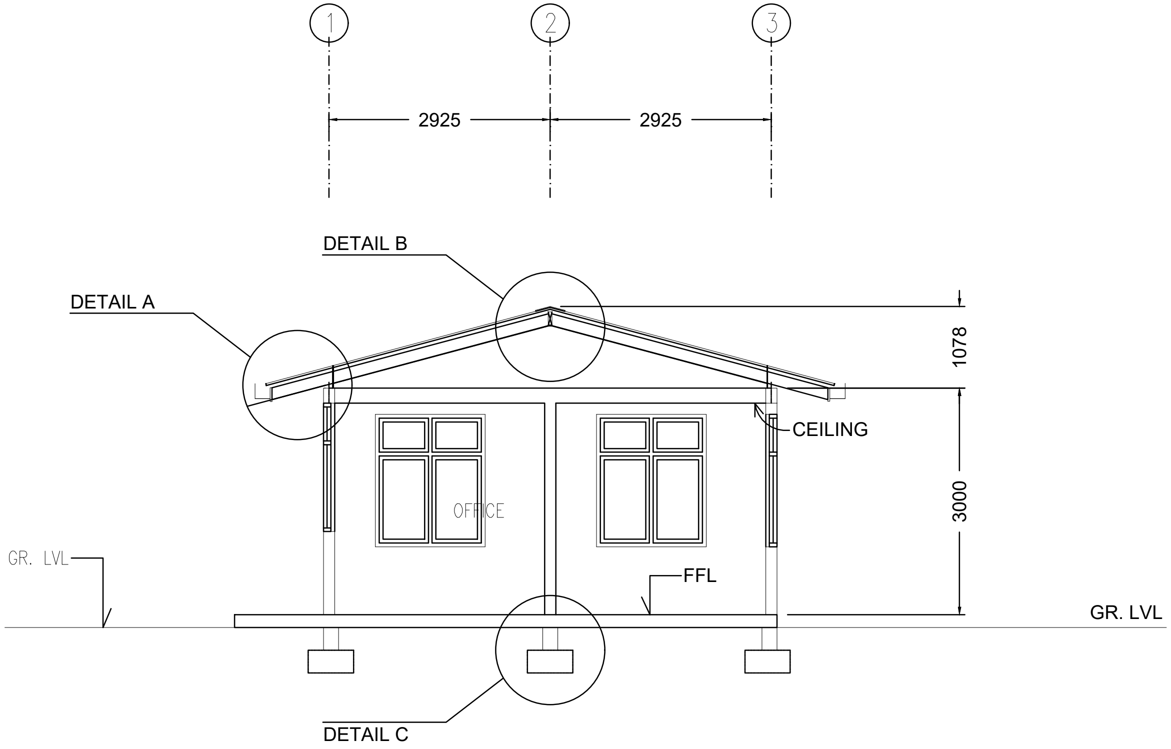
1
2
3
2925
2925
DETAIL B
DETAIL A
1078
CEILING
3000
OFFICE
GR. LVL
FFL
GR. LVL
DETAIL C

SECTION X-X

1:100

Ministry of Environment, Climate Change and Technology
Green Building, Handhuvareehigun
Rep of Maldives

KOCKS CONSULT GMBH
Stegemannstr. 32-38
Tel: +49 261 1302-400
Email: info@kocks-ing.de

WATER SOLUTIONS PVT LTD
4th FL, M. Niadhurumaage
Tel: +960 3341643
Email: info@water-solutions.biz

Construction of Island Waste Management Centers

OFFICE BUILDING
TYPE-A

DESIGNED	KASDARLI
DRAFTED	JALEEL
CHECKED	FAYAZ
PROJECT#	213-98616

AMMENDMENTS

DESIGN

Scale	Paper
AS GIVEN	A4

Drawing No.
6

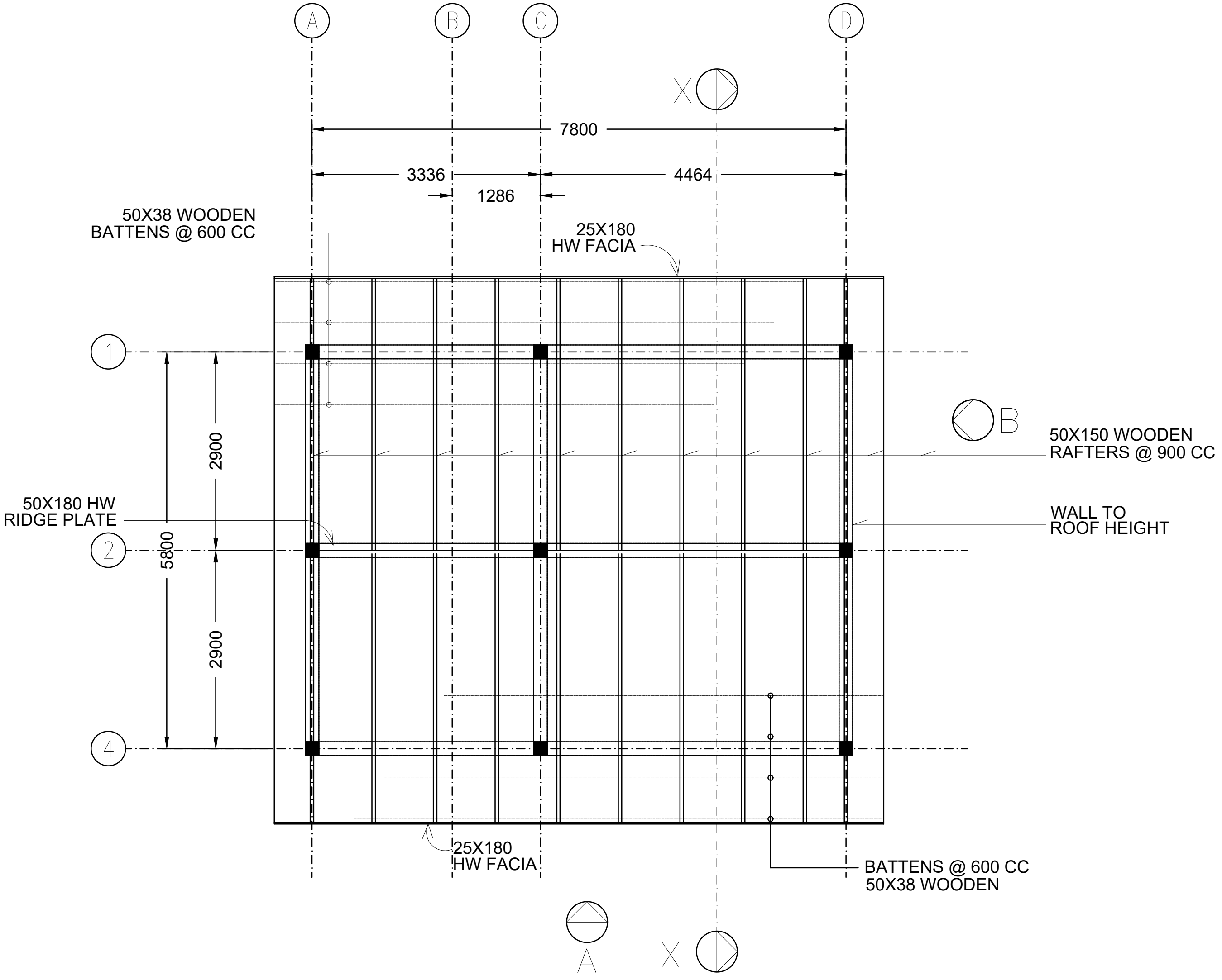
A
B
C
D
1
2
4
X
B
A
X
7800
3336
4464
1286
2900
2900
5800
50X38 WOODEN
BATTENS @ 600 CC
25X180
HW FACIA
50X150 WOODEN
RAFTERS @ 900 CC
50X180 HW
RIDGE PLATE
WALL TO
ROOF HEIGHT
25X180
HW FACIA
BATTENS @ 600 CC
50X38 WOODEN

ROOF STRUCTURE PLAN

1:100

Ministry of Environment, Climate Change and Technology
Green Building, Handhuvareehigun
Rep of Maldives

KOCKS INGENIEURE
KOCKS CONSULT GMBH
Stegemannstr. 32-38
Tel: +49 261 1302-400
Email: info@kocks-ing.de

WS
WATER SOLUTIONS PVT LTD
4th FL, M. Niadhurumaage
Tel: +960 3341643
Email: info@water-solutions.biz

Construction of Island Waste Management Centers

OFFICE BUILDING
TYPE-A

DESIGNED	KASDARLI
DRAFTED	JALEEL
CHECKED	FAYAZ
PROJECT#	213-98616

AMMENDMENTS

DESIGN

Scale	Paper
AS GIVEN	A4

Drawing No.
7

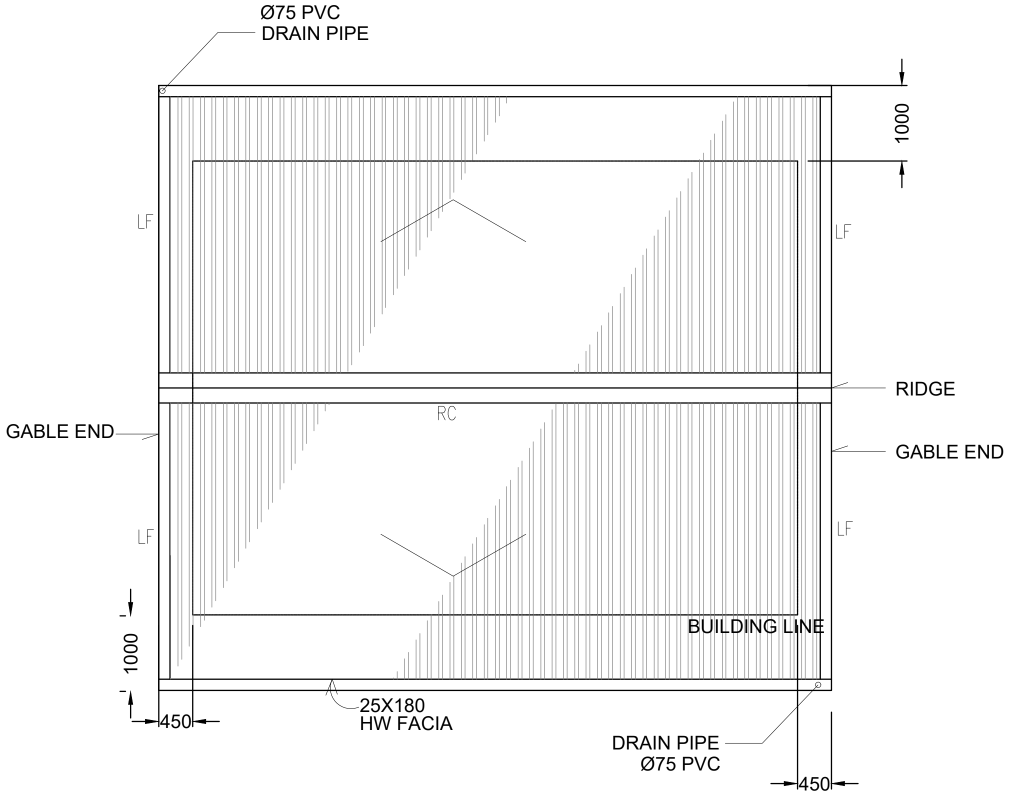
Ø75 PVC
DRAIN PIPE
1000
LF
LF
RIDGE
RC
GABLE END
GABLE END
LF
LF
BUILDING LINE
1000
450
25X180
HW FACIA
DRAIN PIPE
Ø75 PVC
450

ROOF LAYOUT PLAN

1:100

LF: LONGITUDINAL FLASHING
RC: RIDGE CAPPING

Ministry of Environment, Climate Change and Technology
Green Building, Handhuvareehigun
Rep of Maldives

KOCKS INGENIEURE
KOCKS CONSULT GMBH
Stegemannstr. 32-38
Tel: +49 261 1302-400
Email: info@kocks-ing.de

WS
WATER SOLUTIONS PVT LTD
4th FL, M. Niadhurumaage
Tel: +960 3341643
Email: info@water-solutions.biz

Construction of Island Waste Management Centers

OFFICE BUILDING
TYPE-A

DESIGNED	KASDARLI
DRAFTED	JALEEL
CHECKED	FAYAZ
PROJECT#	213-98616

AMMENDMENTS

DESIGN

Scale	Paper
AS GIVEN	A4

Drawing No.
8

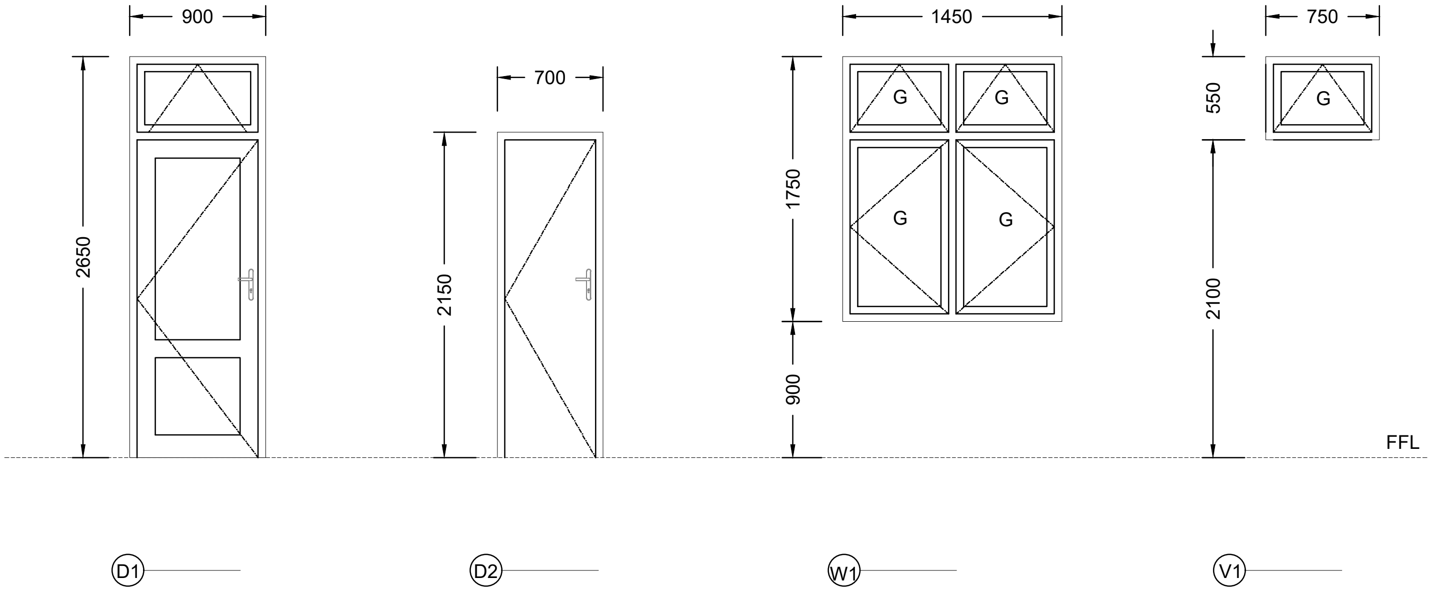

G: 6MM THK CLEAR GLASS

ALL DOORS AND WINDOWS SHOULD BE ALUMINIUM FRAME WITH POWDER COATED WHITE FINISH

DOOR / WINDOW

1:50

Ministry of Environment, Climate Change and Technology
Green Building, Handhuvareehigun
Rep of Maldives

KOCKS INGENIEURE
KOCKS CONSULT GMBH
Stegemannstr. 32-38
Tel: +49 261 1302-400
Email: info@kocks-ing.de

WS
WATER SOLUTIONS PVT LTD
4th FL, M. Niadhurumaage
Tel: +960 3341643
Email: info@water-solutions.biz

Construction of Island Waste Management Centers

OFFICE BUILDING
TYPE-A

DESIGNED	KASDARLI
DRAFTED	JALEEL
CHECKED	FAYAZ
PROJECT#	213-98616

AMMENDMENTS

DESIGN

Scale	Paper
AS GIVEN	A4

Drawing No.
9

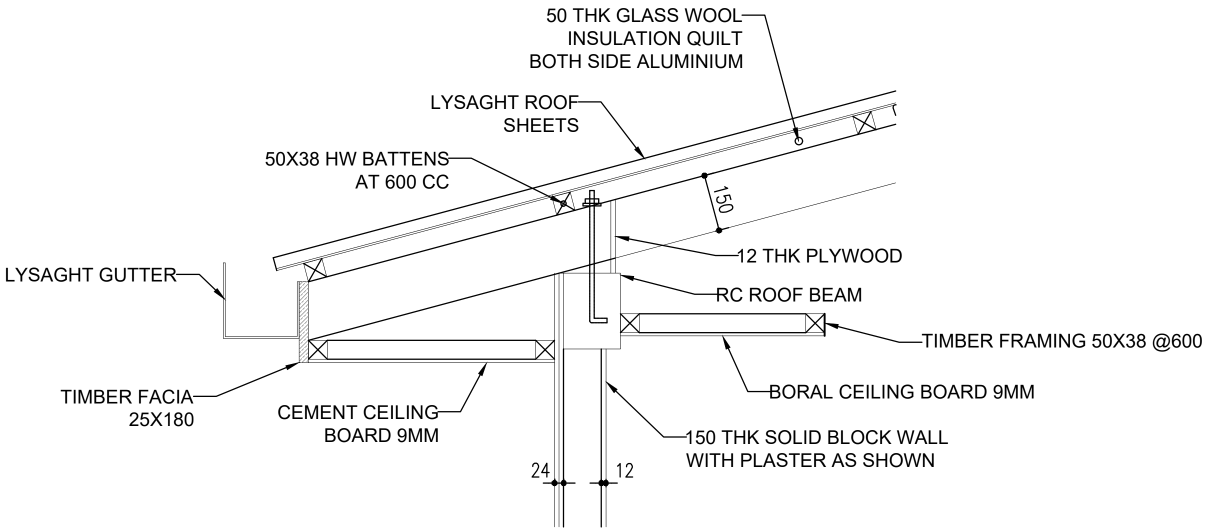
50 THK GLASS WOOL
INSULATION QUILT
BOTH SIDE ALUMINIUM
LYSAGHT ROOF
SHEETS
50X38 HW BATTENS
AT 600 CC
LYSAGHT GUTTER
150
12 THK PLYWOOD
RC ROOF BEAM
TIMBER FRAMING 50X38 @600
BORAL CEILING BOARD 9MM
TIMBER FACIA
25X180
CEMENT CEILING
BOARD 9MM
150 THK SOLID BLOCK WALL
WITH PLASTER AS SHOWN
24
12

DETAIL A

1:20

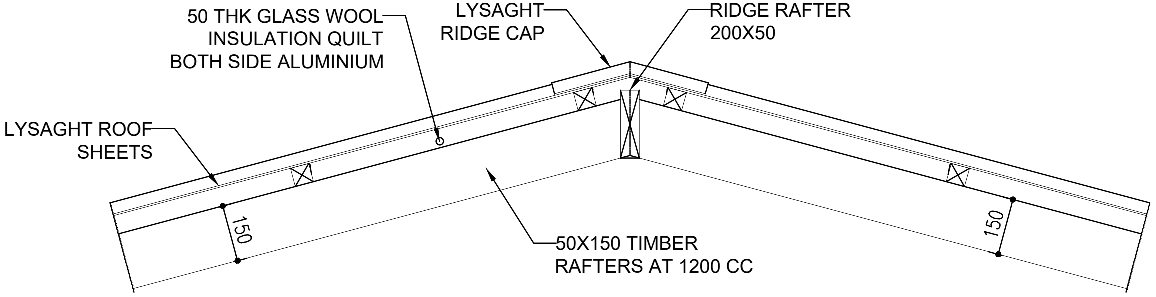
50 THK GLASS WOOL
INSULATION QUILT
BOTH SIDE ALUMINIUM
LYSAGHT
RIDGE CAP
RIDGE RAFTER
200X50
LYSAGHT ROOF
SHEETS
150
150
50X150 TIMBER
RAFTERS AT 1200 CC

DETAIL B

1:20

Ministry of Environment, Climate
Change and Technology
Green Building, Handhuvareehigun
Rep of Maldives

KOCKS
INGENIEURE
KOCKS CONSULT GMBH
Stegemannstr. 32-38
Tel: +49 261 1302-400
Email: info@kocks-ing.de

WATER SOLUTIONS PVT LTD
4th FL, M. Niadhurumaage
Tel: +960 3341643
Email: info@water-solutions.biz

Construction of Island Waste
Management Centers

OFFICE BUILDING
TYPE-A

DESIGNED	KASDARLI
DRAFTED	JALEEL
CHECKED	FAYAZ
PROJECT#	213-98616

AMMENDMENTS

DESIGN

Scale	Paper
AS GIVEN	A4

Drawing No.
10

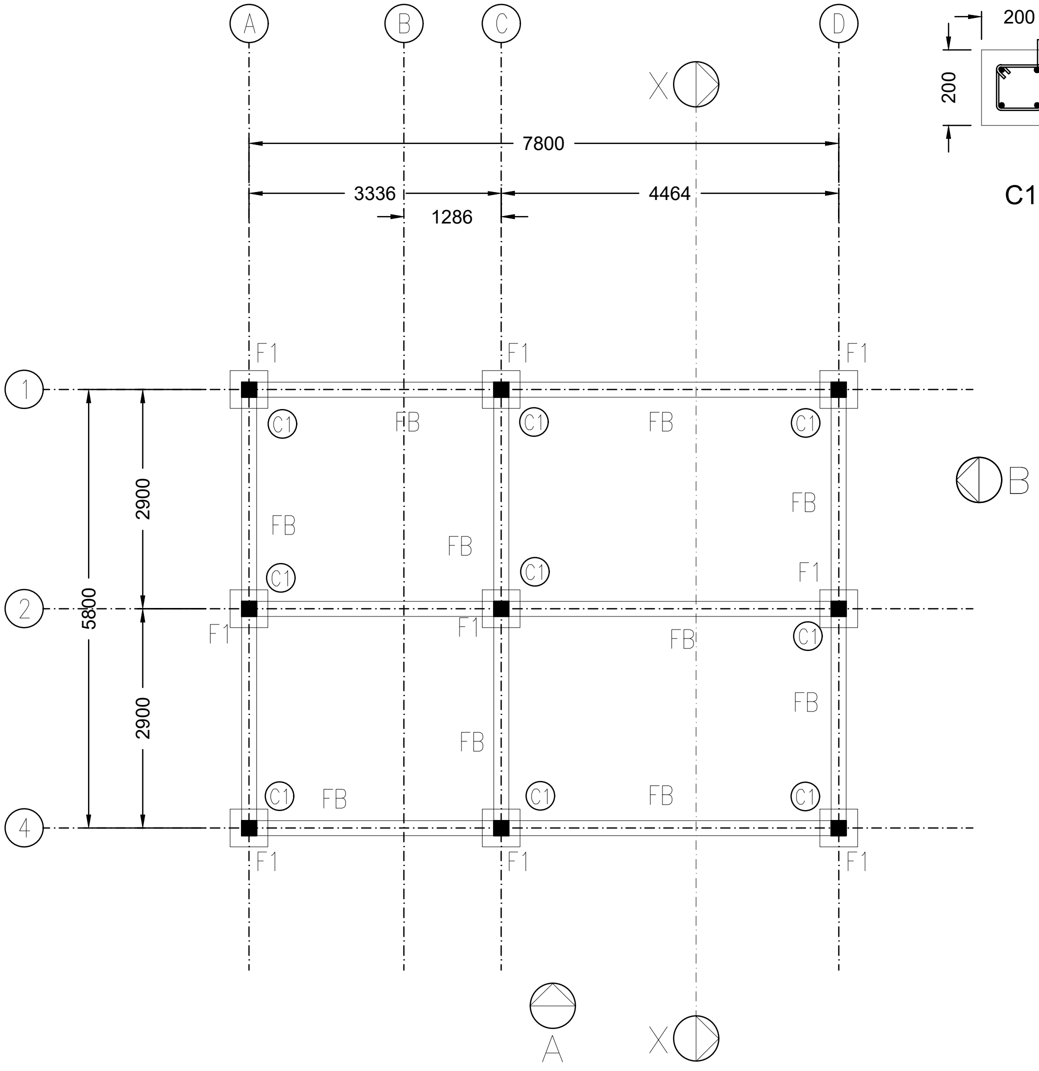
A
B
C
D
X
7800
3336
1286
4464
B
1
2
4
5800
2900
2900
F1
C1
FB
A
X

FOUNDATION AND COLUMN PLAN

1:100

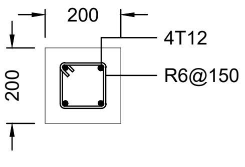
200
200
4T12
R6@150

C1

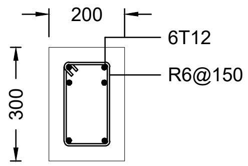
200
300
6T12
R6@150

FB

COVER

Foundations: 50mm

Columns : Below Ground 50mm, Above Ground 40mm
Ground Slab : 40mm
RB : 30mm

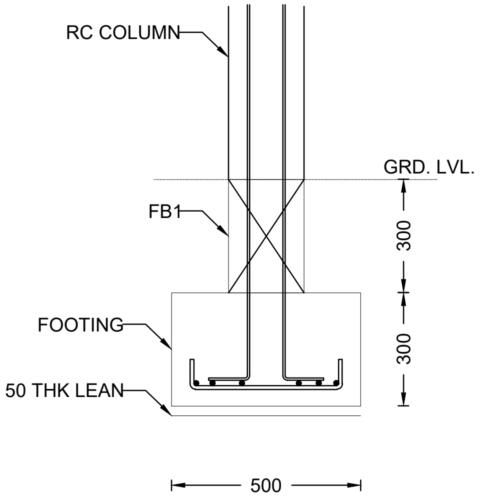
RC COLUMN
GRD. LVL.
FB1
300
FOOTING
300
50 THK LEAN
500

PAD	SIZE	REINFORCEMENT
F1	500X500X300	T10@150 BW

DETAIL C

1:20

Ministry of Environment, Climate Change and Technology
Green Building, Handhuvareehigun
Rep of Maldives

KOCKS INGENIEURE
KOCKS CONSULT GMBH
Stegemannstr. 32-38
Tel: +49 261 1302-400
Email: info@kocks-ing.de

WS
WATER SOLUTIONS PVT LTD
4th FL, M. Niadhurumaage
Tel: +960 3341643
Email: info@water-solutions.biz

Construction of Island Waste Management Centers

OFFICE BUILDING
TYPE-A

DESIGNED	KASDARLI
DRAFTED	JALEEL
CHECKED	FAYAZ
PROJECT#	213-98616

AMMENDMENTS

DESIGN

Scale AS GIVEN	Paper A4

Drawing No.
11

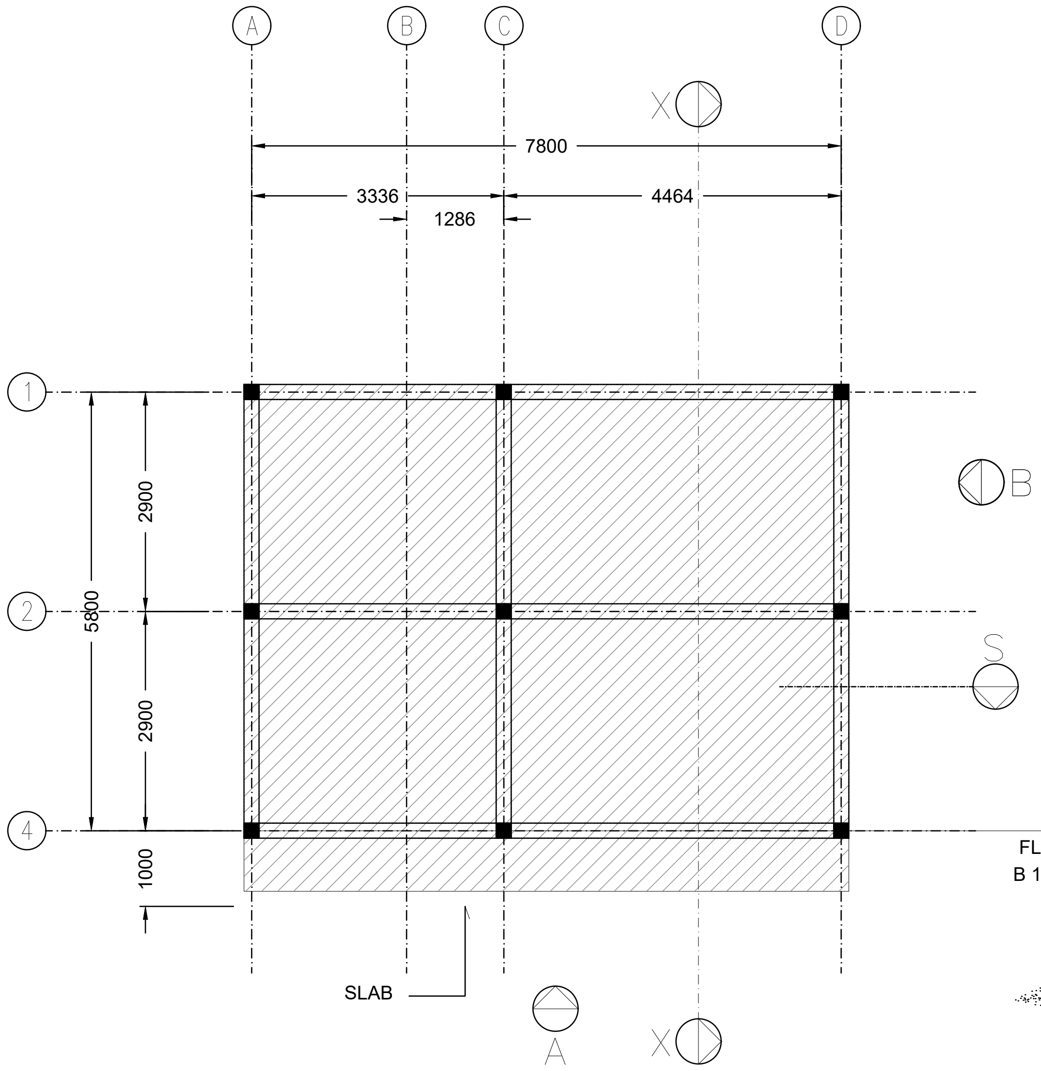
A
B
C
D
X
X
7800
3336
4464
1286
1
2
4
B
S
A
5800
2900
2900
1000
SLAB

NOTES:

GROUND SLAB IS 100 THICK ON
1000 GAUGE POLYTHENE DPM ON
200 COMPACTED HARDCORE

SLAB RFMT: T10@200 BW

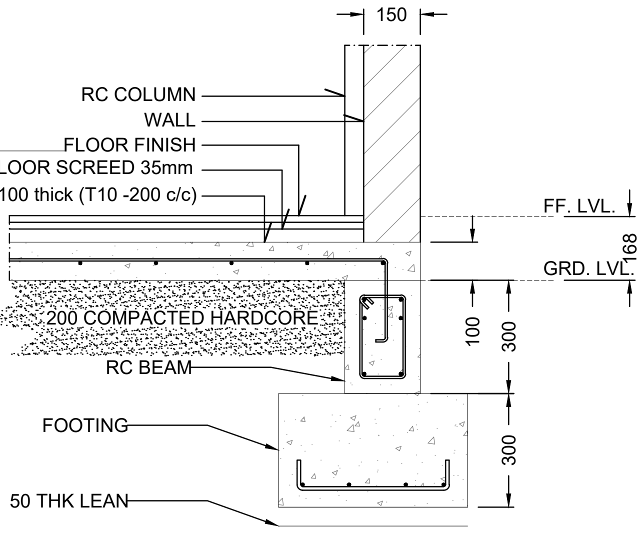
150
RC COLUMN
WALL
FLOOR FINISH
FLOOR SCREED 35mm
B 100 thick (T10 -200 c/c)
FF. LVL.
GRD. LVL.
168
200 COMPACTED HARDCORE
RC BEAM
100
300
FOOTING
300
50 THK LEAN

SECTION-S

1:20

SLAB LAYOUT PLAN

1:100

Ministry of Environment, Climate Change and Technology
Green Building, Handhuvareehigun
Rep of Maldives

KOCKS INGENIEURE
KOCKS CONSULT GMBH
Stegemannstr. 32-38
Tel: +49 261 1302-400
Email: info@kocks-ing.de

WS
WATER SOLUTIONS PVT LTD
4th FL, M. Niadhurumaage
Tel: +960 3341643
Email: info@water-solutions.biz

Construction of Island Waste Management Centers

OFFICE BUILDING
TYPE-A

DESIGNED	KASDARLI
DRAFTED	JALEEL
CHECKED	FAYAZ
PROJECT#	213-98616

AMMENDMENTS

DESIGN

Scale	Paper
AS GIVEN	A4

Drawing No.
12

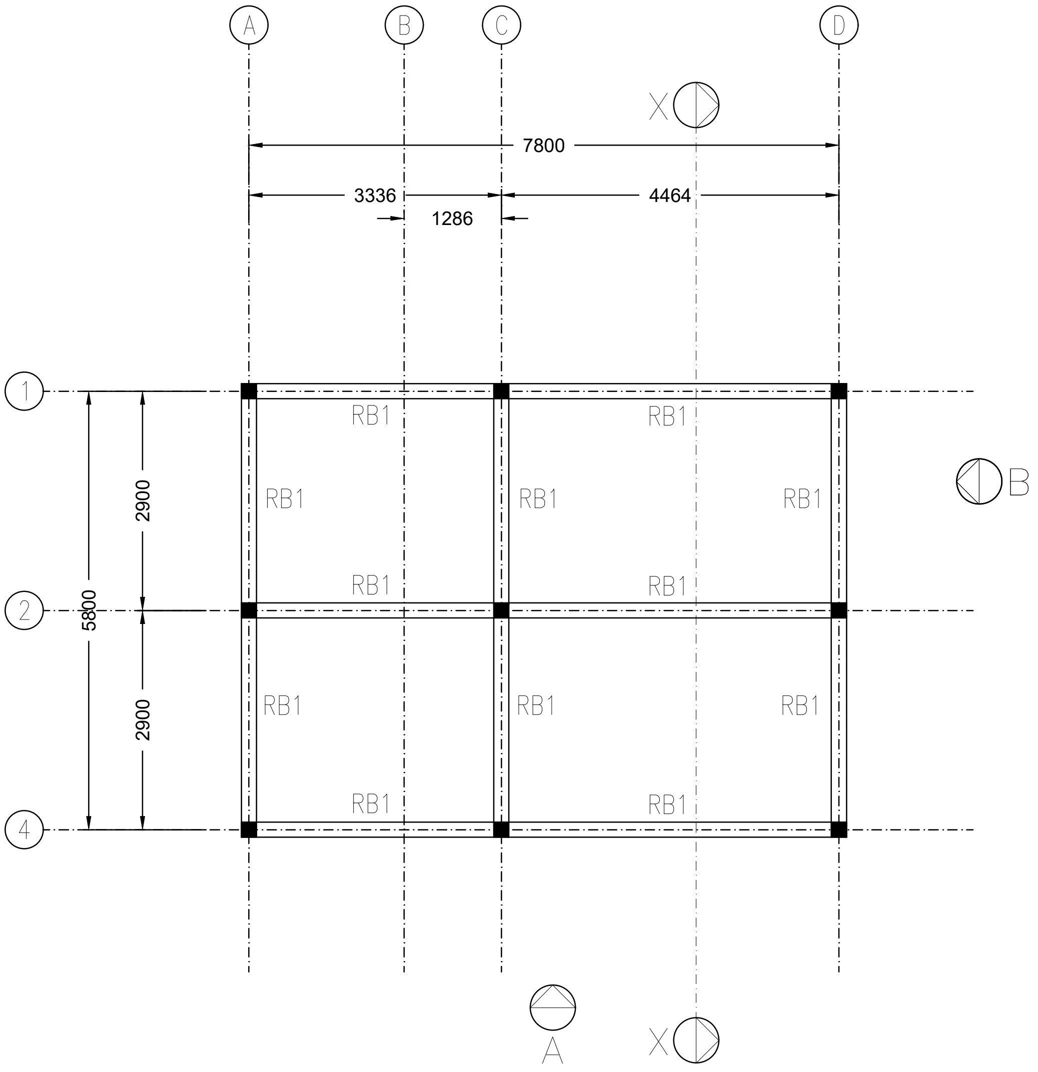
A
B
C
D
X
7800
3336
4464
1286
1
2
4
2900
5800
2900
RB1
RB1
RB1
RB1
RB1
RB1
RB1
RB1
RB1
RB1
RB1
RB1
B
A
X

ROOF BEAM PLAN

1:100

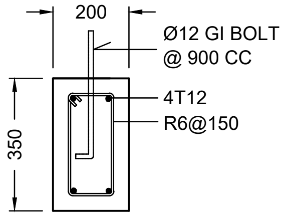
200
Ø12 GI BOLT
@ 900 CC
4T12
R6@150
350

RB1

ROOF BEAM DETAILS

1:20

Ministry of Environment, Climate Change and Technology
Green Building, Handhuvareehigun
Rep of Maldives

KOCKS CONSULT GMBH
Stegemannstr. 32-38
Tel: +49 261 1302-400
Email: info@kocks-ing.de

WATER SOLUTIONS PVT LTD
4th FL, M. Niadhurumaage
Tel: +960 3341643
Email: info@water-solutions.biz

Construction of Island Waste Management Centers

OFFICE BUILDING
TYPE-A

DESIGNED	KASDARLI
DRAFTED	JALEEL
CHECKED	FAYAZ
PROJECT#	213-98616

AMMENDMENTS

DESIGN

Scale	Paper
AS GIVEN	A4

Drawing No.

13

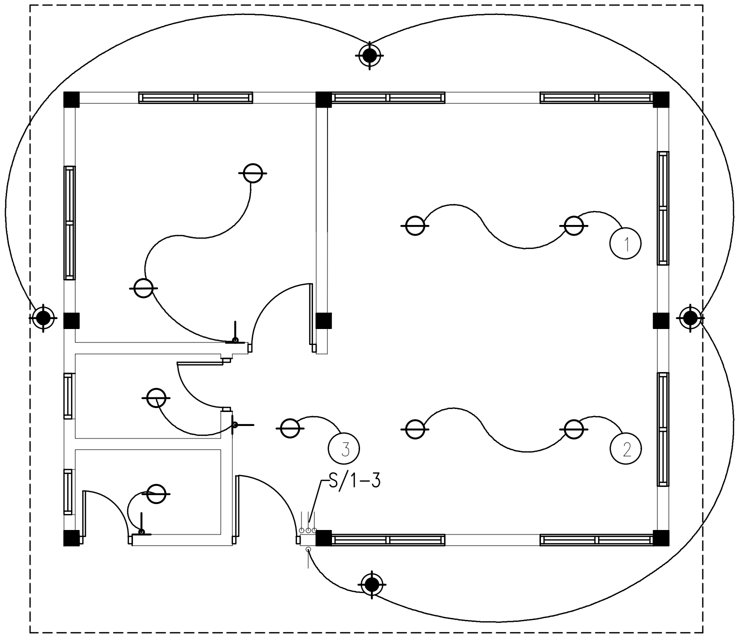

LIGHTING LAYOUT PLAN

1:100

ELECTRICAL LEGEND

⊖	CEILING RECESSED E/S DOWN LIGHT
⊕	WATERPROOF SPOTLIGHT LV HALOGEN
▽▽	EMERGENCY LIGHT(RECHARGEABLE)
⊢	ONE-WAY SWITCH (SINGLE GANG)
⊢	ONE-WAY SWITCH (DOUBLE GANG)
⊢	TWO-WAY SWITCH (SINGLE GANG)
⊃	WALL SOCKET OUTLET (DOUBLE GANG)
⊃	SERVICE SOCKET OUTLET
●	WATERPROOF WALL SOCKET OUTLET (SINGLE GANG)
●	WATERPROOF SERVICE SOCKET OUTLET (SINGLE GANG) 1.8 H
⊘	CEILING FAN 1.2M DIA
◪	D-BOARD
P	WELL WATER PUMP

NOTE:

ALL HEIGHTS ARE FROM FINISHED FLOOR LEVEL

ALL WALL SOCKET OUTLETS ARE 0.3M AFFL EXCEPT WHERE STATED

ALL LIGHT SWITCHES ARE AT 1.2M AFFL

Ministry of Environment, Climate Change and Technology
Green Building, Handhuvareehigun
Rep of Maldives

KOCKS INGENIEURE
KOCKS CONSULT GMBH
Stegemannstr. 32-38
Tel: +49 261 1302-400
Email: info@kocks-ing.de

WS
WATER SOLUTIONS PVT LTD
4th FL, M. Niadhurumaage
Tel: +960 3341643
Email: info@water-solutions.biz

Construction of Island Waste Management Centers

OFFICE BUILDING
TYPE-A

DESIGNED	KASDARLI
DRAFTED	JALEEL
CHECKED	FAYAZ
PROJECT#	213-98616

AMMENDMENTS

DESIGN

Scale	Paper
AS GIVEN	A4

Drawing No.
14

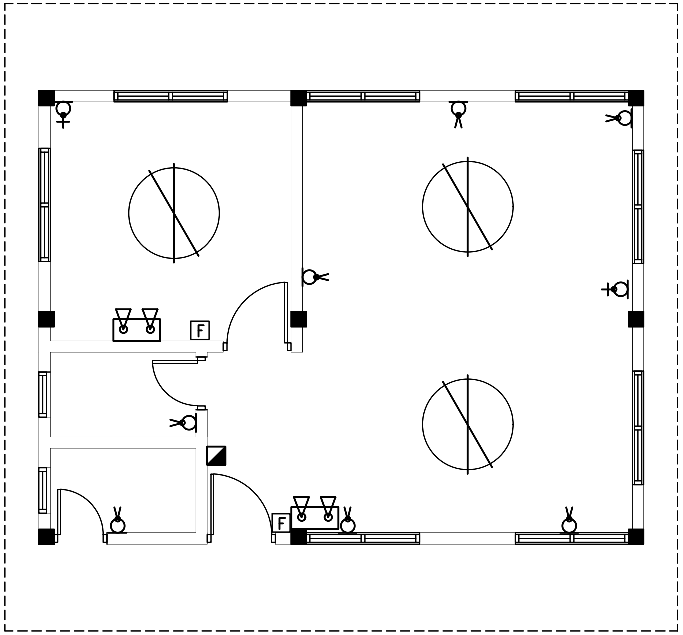

FAN & POWER LAYOUT PLAN

1:100

ELECTRICAL LEGEND

- CEILING RECESSED E/S DOWN LIGHT
- WATERPROOF SPOTLIGHT LV HALOGEN
- EMERGENCY LIGHT(RECHARGEABLE)
- ONE-WAY SWITCH (SINGLE GANG)
- ONE-WAY SWITCH (DOUBLE GANG)
- TWO-WAY SWITCH (SINGLE GANG)
- M MAINS CONTROL
- WALL SOCKET OUTLET (DOUBLE GANG)
- SHAVER SOCKET OUTLET (SINGLE GANG) 1.2M H
- SERVICE SOCKET OUTLET
- WATERPROOF WALL SOCKET OUTLET (SINGLE GANG)
- WATERPROOF SERVICE SOCKET OUTLET (SINGLE GANG) 1.8 H
- CEILING FAN 1.2M DIA
- ◪ D-BOARD
- F FAN DIMMER

ALL HEIGHTS ARE FROM FINISHED FLOOR LEVEL

ALL WALL SOCKET OUTLETS ARE 0.3M AFFL
EXCEPT WHERE STATED

ALL LIGHT SWITCHES ARE AT 1.2M AFFL

Ministry of Environment, Climate
Change and Technology
Green Building, Handhuvareehigun
Rep of Maldives

KOCKS INGENIEURE
KOCKS CONSULT GMBH
Stegemannstr. 32-38
Tel: +49 261 1302-400
Email: info@kocks-ing.de

WS
WATER SOLUTIONS PVT LTD
4th FL, M. Niadhurumaage
Tel: +960 3341643
Email: info@water-solutions.biz

Construction of Island Waste
Management Centers

OFFICE BUILDING
TYPE-A

DESIGNED	KASDARLI
DRAFTED	JALEEL
CHECKED	FAYAZ
PROJECT#	213-98616

AMMENDMENTS

DESIGN

Scale	Paper
AS GIVEN	A4

Drawing No.
15

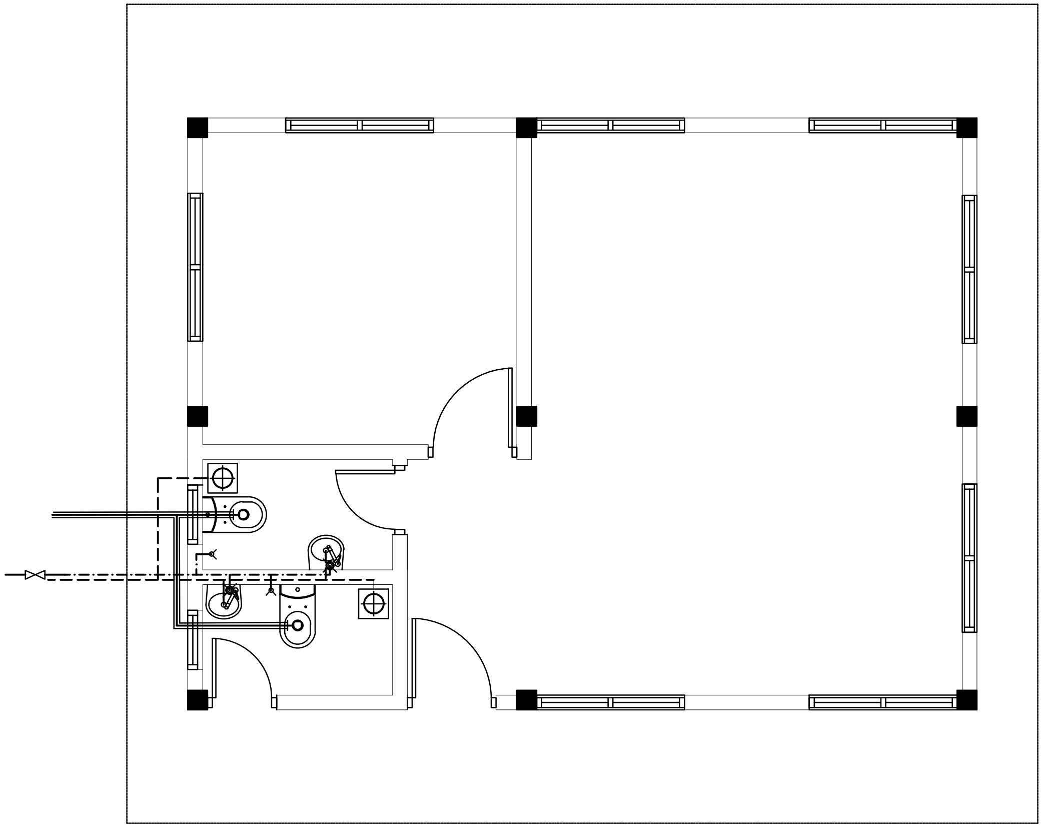

SEWAGE DISPOSAL AND WATER SUPPLY LAYOUT PLAN

PLUMBING LEGEND

—≺	MUSLIM SHOWER	═══════	DIA 100 WASTE PIPE
—⋈	FAUCET	— — — — —	DIA 50 WASTE PIPE
⊢◁	SHOWER ROSE	—·—·—·—	DIA 12 COLD WATER SUPPLY
⊞	DIA 100 DRAIN		
⊗	CLEAN-OUT HATCH		
—⋈—	GATE VALVE		

Ministry of Environment, Climate Change and Technology
Green Building, Handhuvareehigun
Rep of Maldives

KOCKS INGENIEURE
KOCKS CONSULT GMBH
Stegemannstr. 32-38
Tel: +49 261 1302-400
Email: info@kocks-ing.de

WS
WATER SOLUTIONS PVT LTD
4th FL, M. Niadhurumaage
Tel: +960 3341643
Email: info@water-solutions.biz

Construction of Island Waste Management Centers

OFFICE BUILDING
TYPE-A

DESIGNED	KASDARLI
DRAFTED	JALEEL
CHECKED	FAYAZ
PROJECT#	213-98616

AMMENDMENTS

DESIGN

Scale	Paper
AS GIVEN	A4

Drawing No.
16

Construction of
Island Waste Management Center

SHED TYPE-A

Ministry of Environment, Climate Change and Technology
Green Building, Handhuvareehigun
Rep of Maldives

KOCKS INGENIEURE
KOCKS CONSULT GMBH
Stegemannstr. 32-38
Tel: +49 261 1302-400
Email: info@kocks-ing.de

WS
WATER SOLUTIONS PVT LTD
4th FL, M. Niadhurumaage
Tel: +960 3341643
Email: info@water-solutions.biz

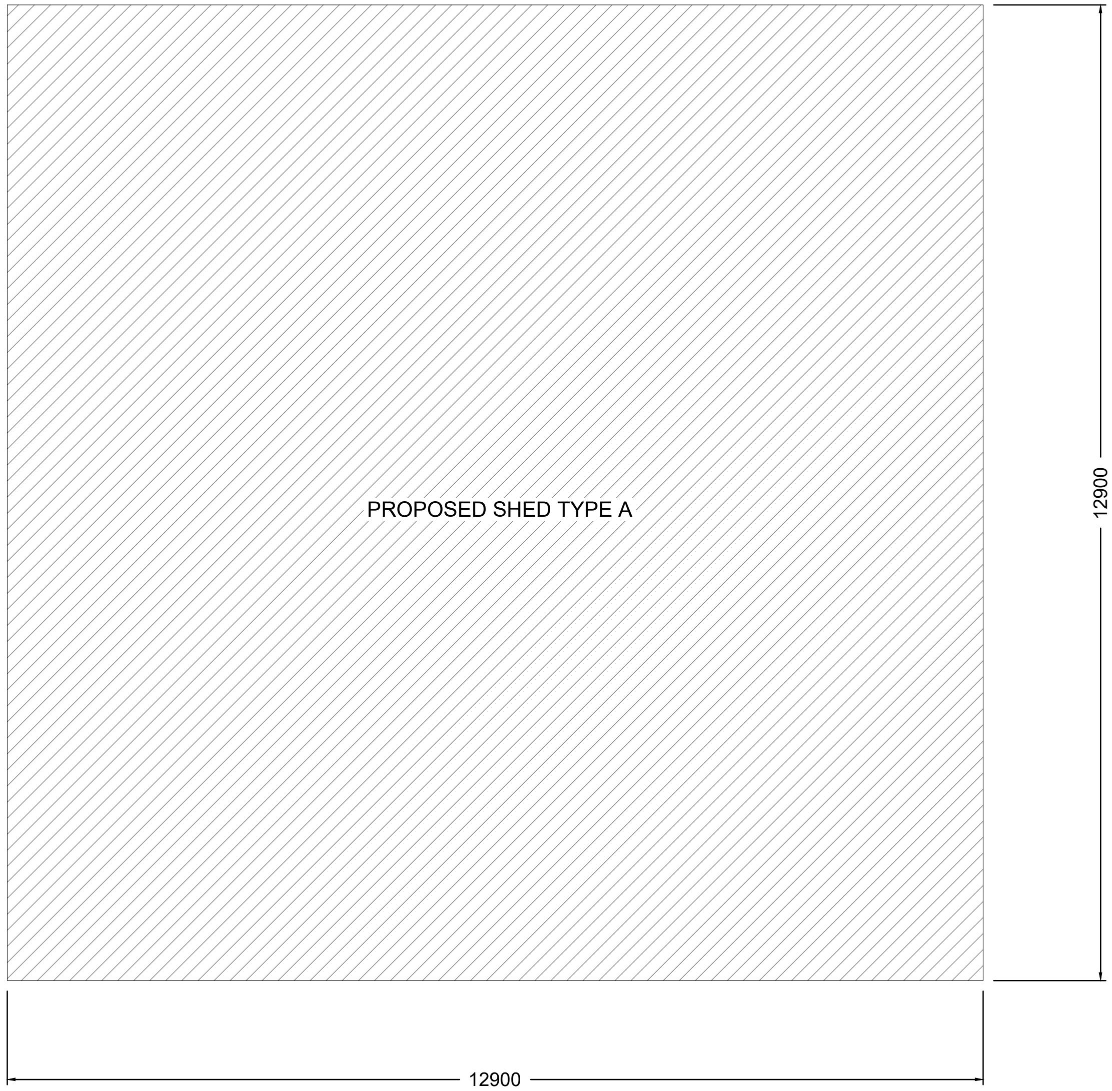

SITE PLAN

1:100

Ministry of Environment, Climate Change and Technology
Green Building, Handhuvareehigun
Rep of Maldives

KOCKS INGENIEURE
KOCKS CONSULT GMBH
Stegemannstr. 32-38
Tel: +49 261 1302-400
Email: info@kocks-ing.de

WS
WATER SOLUTIONS PVT LTD
4th FL, M. Niadhurumaage
Tel: +960 3341643
Email: info@water-solutions.biz

Construction of Island Waste Management Centers

SHED
TYPE-A

DESIGNED	KASDARLI
DRAFTED	JALEEL
CHECKED	FAYAZ
PROJECT#	213-98616

AMMENDMENTS

DESIGN

Scale	Paper
AS GIVEN	A4

Drawing No.
1

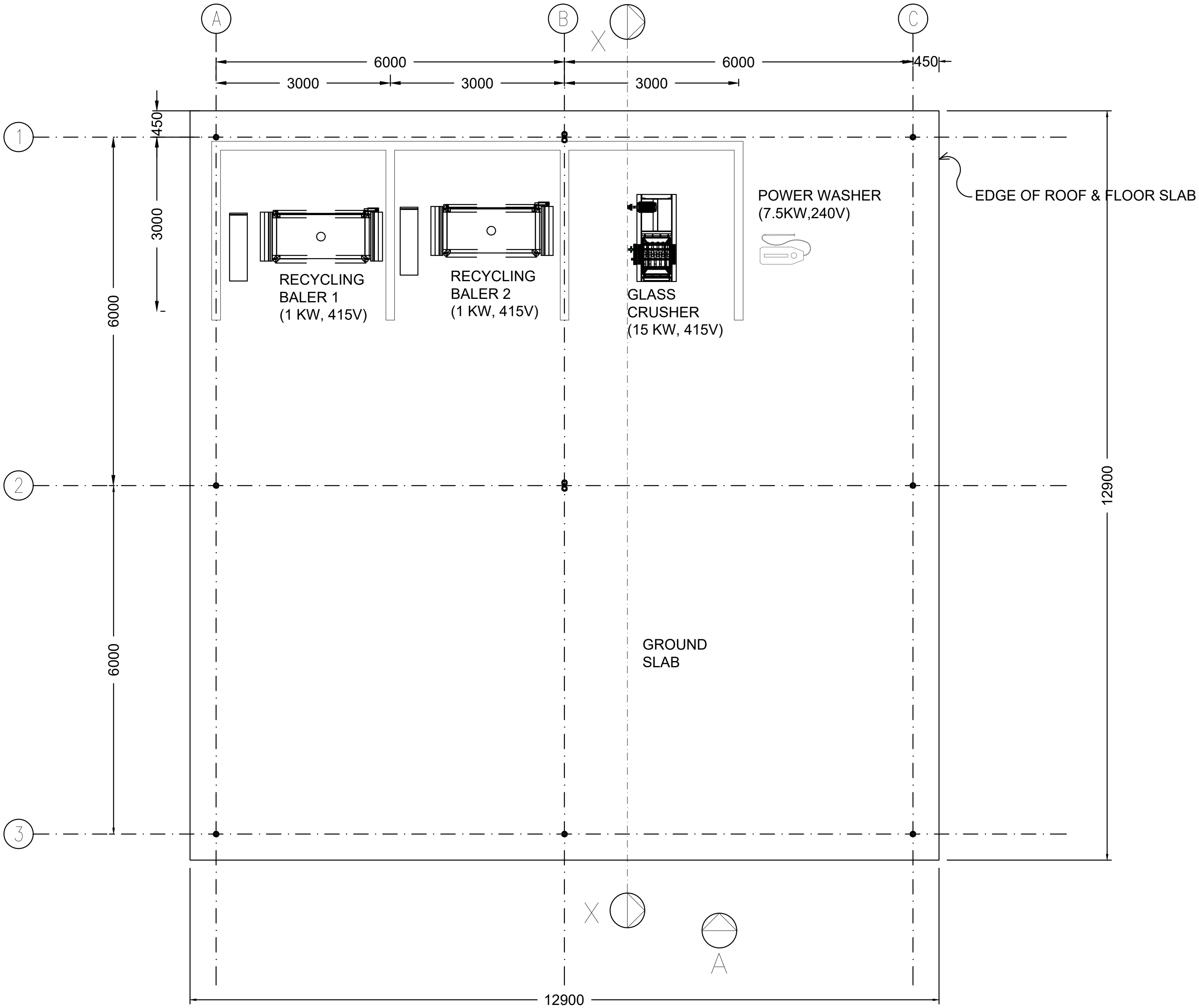
A
B
C
X
X
A
1
2
3
6000
6000
3000
3000
3000
450
450
3000
6000
6000
12900
12900
POWER WASHER
(7.5KW,240V)
EDGE OF ROOF & FLOOR SLAB
RECYCLING
BALER 1
(1 KW, 415V)
RECYCLING
BALER 2
(1 KW, 415V)
GLASS
CRUSHER
(15 KW, 415V)
GROUND
SLAB

GROUND FLOOR LAYOUT PLAN

1:100

Ministry of Environment, Climate Change and Technology
Green Building, Handhuvareehigun
Rep of Maldives

KOCKS CONSULT GMBH
Stegemannstr. 32-38
Tel: +49 261 1302-400
Email: info@kocks-ing.de

WATER SOLUTIONS PVT LTD
4th FL, M. Niadhurumaage
Tel: +960 3341643
Email: info@water-solutions.biz

Construction of Island Waste Management Centers

SHED
TYPE-A

DESIGNED	KASDARLI
DRAFTED	JALEEL
CHECKED	FAYAZ
PROJECT#	213-98616

AMMENDMENTS

DESIGN

Scale	Paper
AS GIVEN	A4

Drawing No.
2

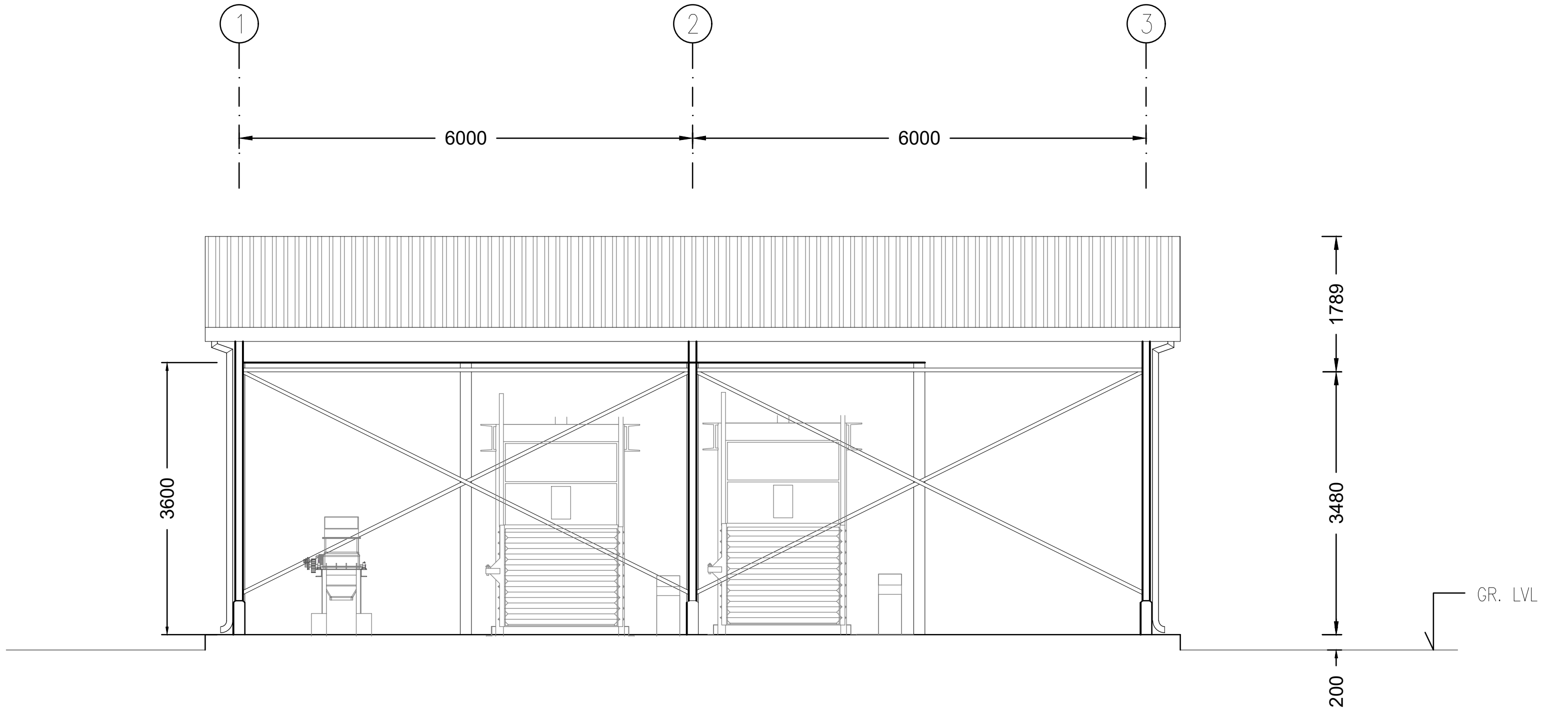

ELEVATION A

1:100

Ministry of Environment, Climate
Change and Technology
Green Building, Handhuvareehigun
Rep of Maldives

KOCKS INGENIEURE
KOCKS CONSULT GMBH
Stegemannstr. 32-38
Tel: +49 261 1302-400
Email: info@kocks-ing.de

WATER SOLUTIONS PVT LTD
4th FL, M. Niadhurumaage
Tel: +960 3341643
Email: info@water-solutions.biz

Construction of Island Waste Management Centers

SHED
TYPE-A

DESIGNED	KASDARLI
DRAFTED	JALEEL
CHECKED	FAYAZ
PROJECT#	213-98616

AMMENDMENTS

DESIGN

Scale	Paper
AS GIVEN	A4

Drawing No.
3

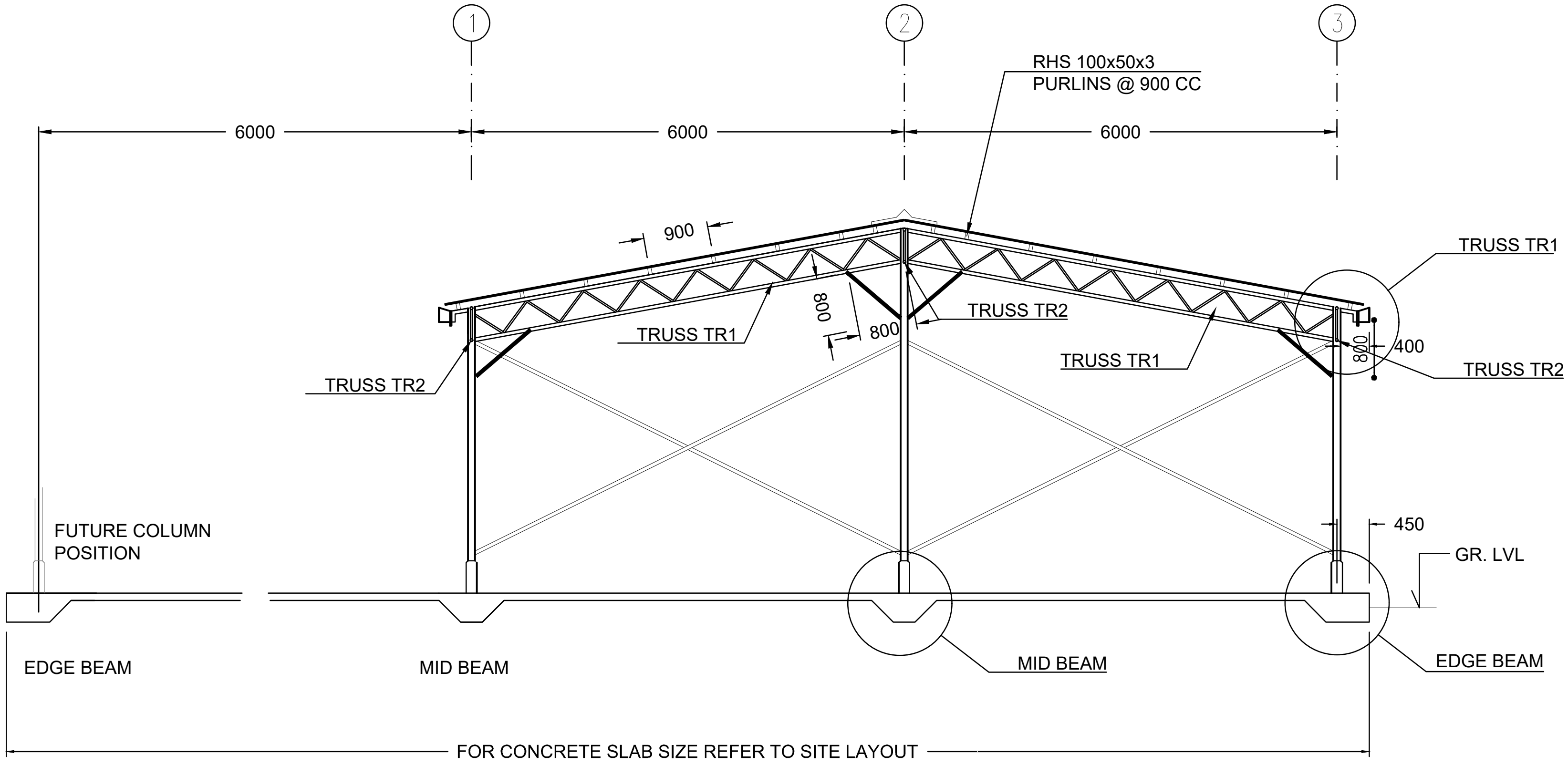
1
2
3
6000
6000
6000
RHS 100x50x3
PURLINS @ 900 CC
900
800
800
TRUSS TR1
TRUSS TR2
TRUSS TR1
TRUSS TR2
TRUSS TR1
TRUSS TR2
400
800
450
GR. LVL
FUTURE COLUMN
POSITION
EDGE BEAM
MID BEAM
MID BEAM
EDGE BEAM
FOR CONCRETE SLAB SIZE REFER TO SITE LAYOUT

SECTION X-X

1:100

Ministry of Environment, Climate Change and Technology
Green Building, Handhuvareehigun
Rep of Maldives

KOCKS INGENIEURE
KOCKS CONSULT GMBH
Stegemannstr. 32-38
Tel: +49 261 1302-400
Email: info@kocks-ing.de

WS
WATER SOLUTIONS PVT LTD
4th FL, M. Niadhurumaage
Tel: +960 3341643
Email: info@water-solutions.biz

Construction of Island Waste Management Centers

SHED
TYPE-A

DESIGNED	KASDARLI
DRAFTED	JALEEL
CHECKED	FAYAZ
PROJECT#	213-98616

AMMENDMENTS

DESIGN

Scale	Paper
AS GIVEN	A4

Drawing No.
4

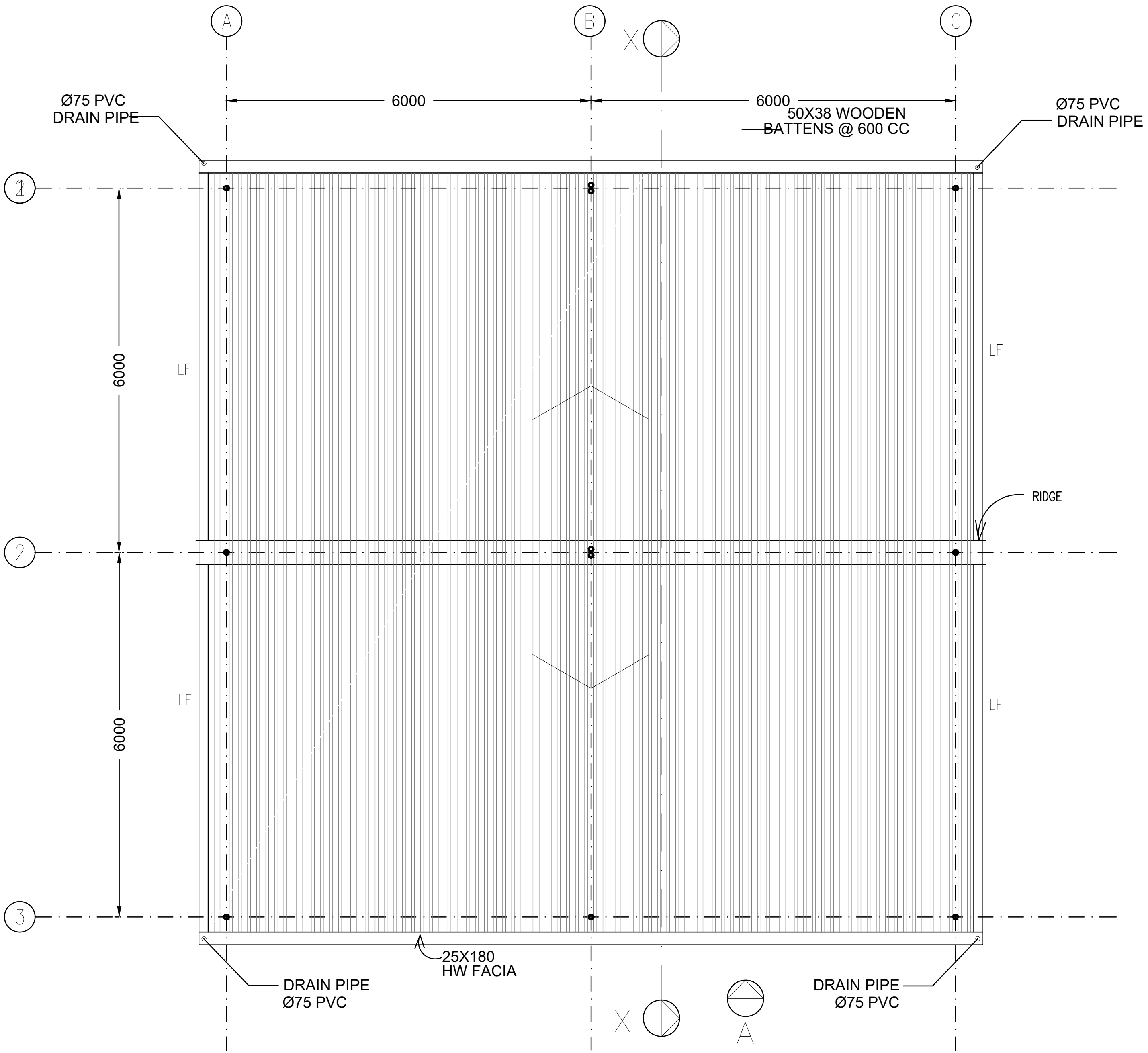
A
B
C
1
2
3
6000
6000
6000
6000
Ø75 PVC
DRAIN PIPE
50X38 WOODEN
BATTENS @ 600 CC
Ø75 PVC
DRAIN PIPE
LF
LF
LF
LF
RIDGE
X
X
25X180
HW FACIA
DRAIN PIPE
Ø75 PVC
DRAIN PIPE
Ø75 PVC
A

ROOF PLAN

1:100

Ministry of Environment, Climate
Change and Technology
Green Building, Handhuvareehigun
Rep of Maldives

KOCKS INGENIEURE
KOCKS CONSULT GMBH
Stegemannstr. 32-38
Tel: +49 261 1302-400
Email: info@kocks-ing.de

WATER SOLUTIONS PVT LTD
4th FL, M. Niadhurumaage
Tel: +960 3341643
Email: info@water-solutions.biz

Construction of Island Waste
Management Centers

SHED
TYPE-A

DESIGNED	KASDARLI
DRAFTED	JALEEL
CHECKED	FAYAZ
PROJECT#	213-98616

AMMENDMENTS

DESIGN

Scale	Paper
AS GIVEN	A4

Drawing No.
5

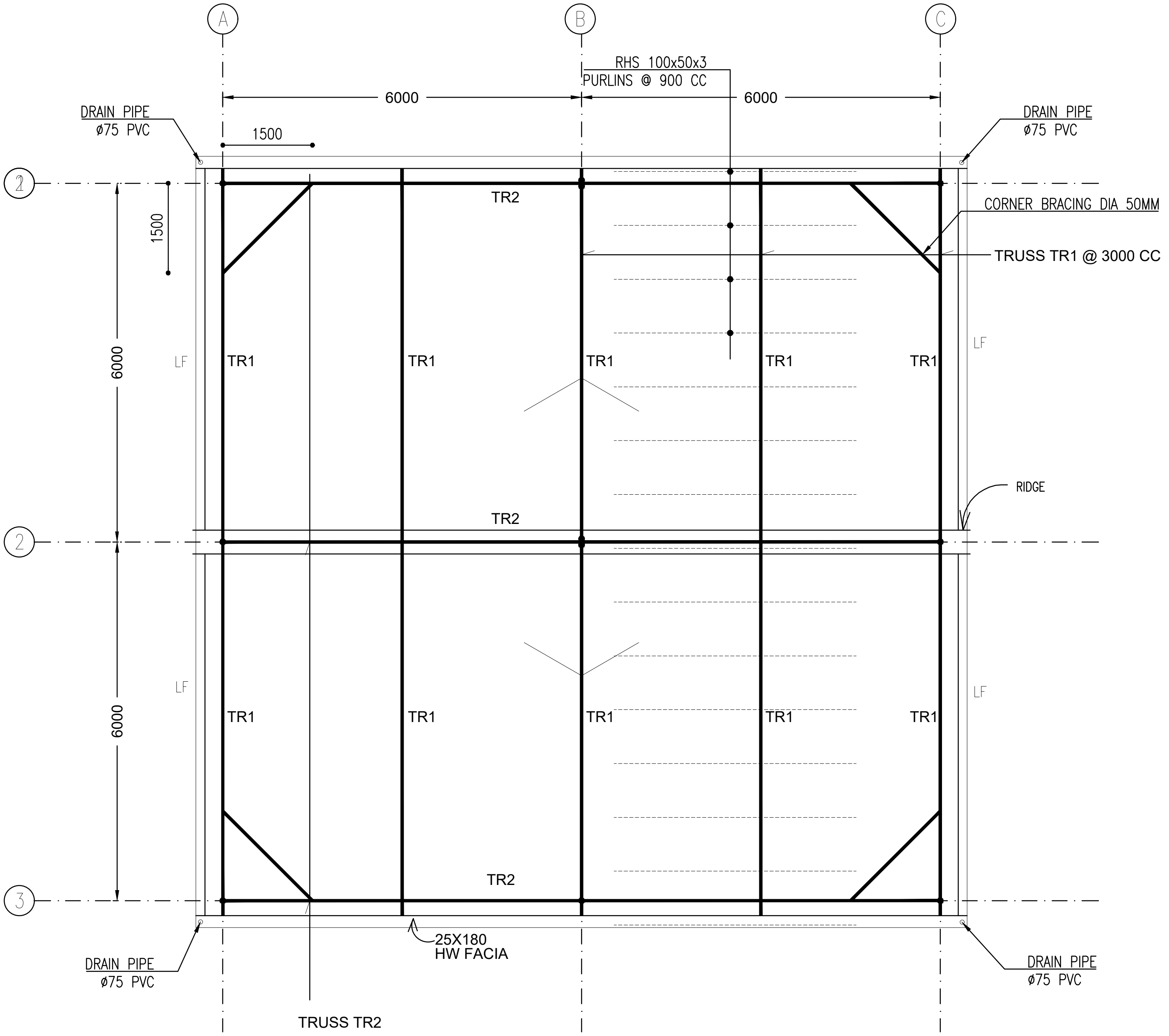
A
B
C
1
2
3
RHS 100x50x3
PURLINS @ 900 CC
6000
6000
DRAIN PIPE
ø75 PVC
DRAIN PIPE
ø75 PVC
1500
1500
CORNER BRACING DIA 50MM
TRUSS TR1 @ 3000 CC
TR2
TR2
TR2
TR1
TR1
TR1
TR1
TR1
TR1
TR1
TR1
TR1
TR1
LF
LF
LF
LF
6000
6000
RIDGE
DRAIN PIPE
ø75 PVC
DRAIN PIPE
ø75 PVC
25X180
HW FACIA
TRUSS TR2

ROOF STRUCTURE

1:100

Ministry of Environment, Climate Change and Technology
Green Building, Handhuvareehigun
Rep of Maldives

KOCKS INGENIEURE
KOCKS CONSULT GMBH
Stegemannstr. 32-38
Tel: +49 261 1302-400
Email: info@kocks-ing.de

WS
WATER SOLUTIONS PVT LTD
4th FL, M. Niadhurumaage
Tel: +960 3341643
Email: info@water-solutions.biz

Construction of Island Waste Management Centers

SHED
TYPE-A

DESIGNED	KASDARLI
DRAFTED	JALEEL
CHECKED	FAYAZ
PROJECT#	213-98616

AMMENDMENTS

DESIGN

Scale	Paper
AS GIVEN	A4

Drawing No.
6

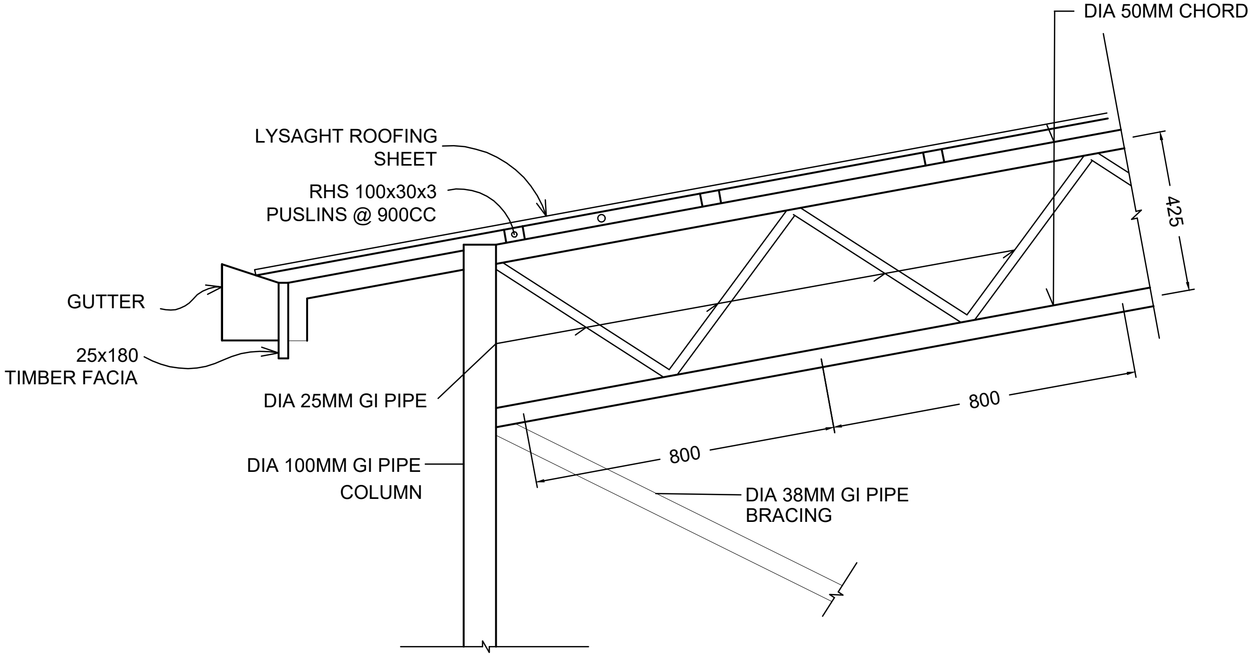
DIA 50MM CHORD
LYSAGHT ROOFING SHEET
RHS 100x30x3 PUSLINS @ 900CC
425
GUTTER
25x180 TIMBER FACIA
DIA 25MM GI PIPE
800
800
DIA 100MM GI PIPE COLUMN
DIA 38MM GI PIPE BRACING

TR-1

1:20

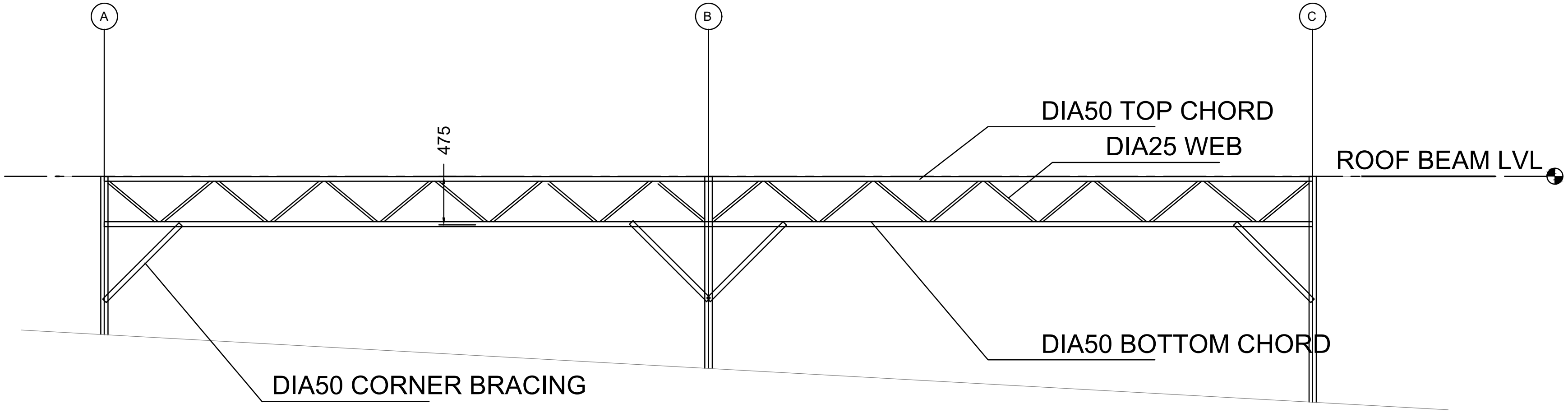
A
B
C
475
DIA50 TOP CHORD
DIA25 WEB
ROOF BEAM LVL
DIA50 BOTTOM CHORD
DIA50 CORNER BRACING

TR-2

Ministry of Environment, Climate Change and Technology
Green Building, Handhuvareehigun
Rep of Maldives

KOCKS CONSULT GMBH
Stegemannstr. 32-38
Tel: +49 261 1302-400
Email: info@kocks-ing.de

WATER SOLUTIONS PVT LTD
4th FL, M. Niadhurumaage
Tel: +960 3341643
Email: info@water-solutions.biz

Construction of Island Waste Management Centers

SHED
TYPE-A

DESIGNED	KASDARLI
DRAFTED	JALEEL
CHECKED	FAYAZ
PROJECT#	213-98616

AMMENDMENTS

DESIGN

Scale	Paper
AS GIVEN	A4

Drawing No.
7

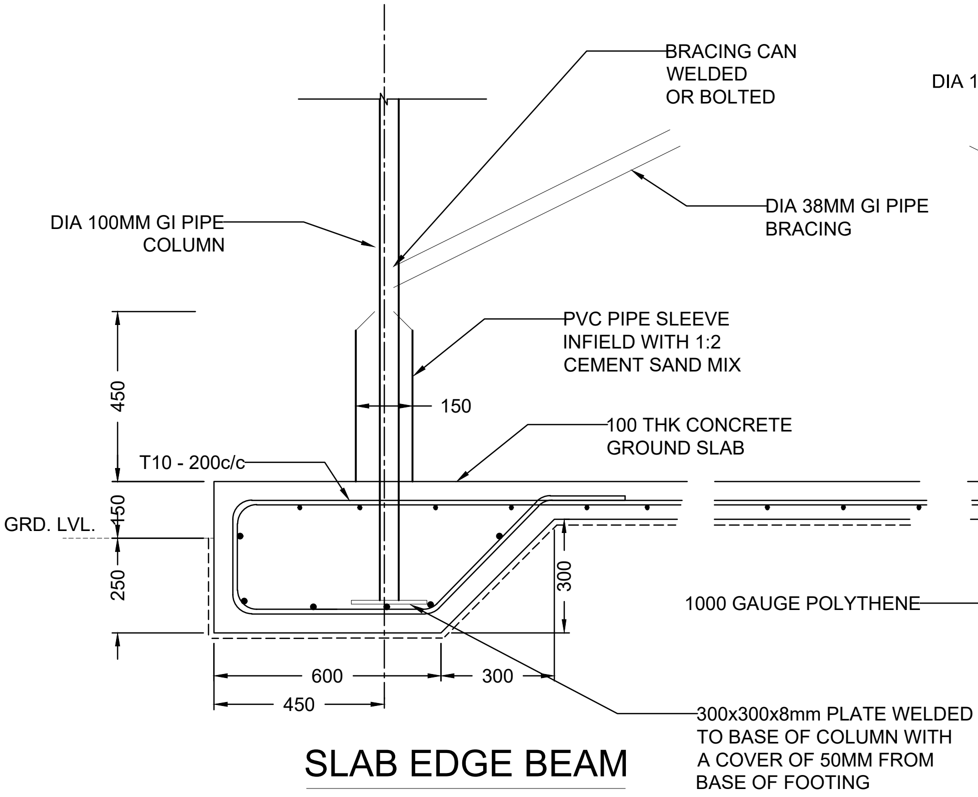
BRACING CAN
WELDED
OR BOLTED
DIA 100MM GI PIPE
COLUMN
DIA 38MM GI PIPE
BRACING
PVC PIPE SLEEVE
INFIELD WITH 1:2
CEMENT SAND MIX
150
450
100 THK CONCRETE
GROUND SLAB
T10 - 200c/c
GRD. LVL.
150
250
300
600
300
450
1000 GAUGE POLYTHENE
300x300x8mm PLATE WELDED
TO BASE OF COLUMN WITH
A COVER OF 50MM FROM
BASE OF FOOTING

SLAB EDGE BEAM

1:20

C1

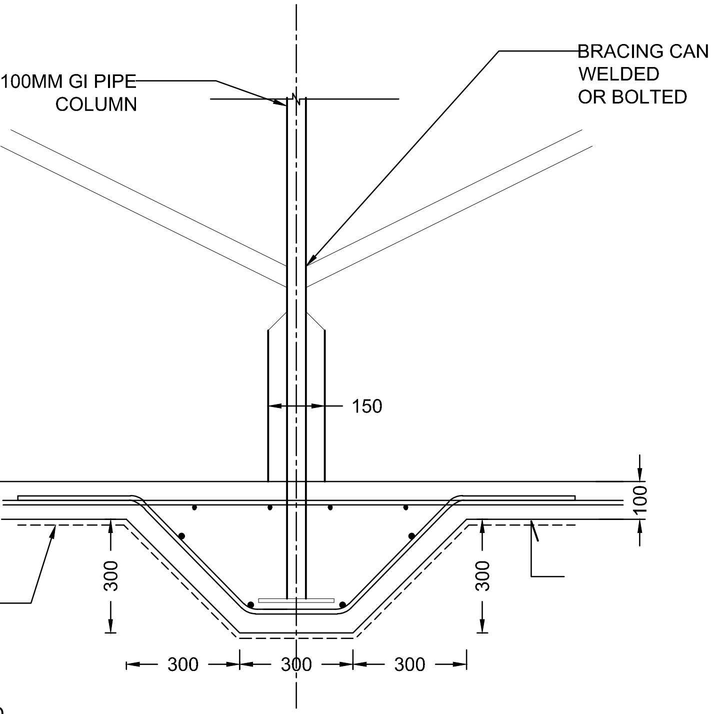
DIA 100MM GI PIPE
COLUMN
BRACING CAN
WELDED
OR BOLTED
150
100
300
300
300
300
300

SLAB MID BEAM

1:20

C2

TYPICAL CONCRETE SLAB DETAILS - Shed, Hazardous waste, Concrete Slab

1:20

Ministry of Environment, Climate
Change and Technology
Green Building, Handhuvareehigun
Rep of Maldives

KOCKS INGENIEURE
KOCKS CONSULT GMBH
Stegemannstr. 32-38
Tel: +49 261 1302-400
Email: info@kocks-ing.de

WS
WATER SOLUTIONS PVT LTD
4th FL, M. Niadhurumaage
Tel: +960 3341643
Email: info@water-solutions.biz

Construction of Island Waste
Management Centers

SHED
TYPE-A

DESIGNED	KASDARLI
DRAFTED	JALEEL
CHECKED	FAYAZ
PROJECT#	213-98616

AMMENDMENTS

DESIGN

Scale	Paper
AS GIVEN	A4

Drawing No.

8

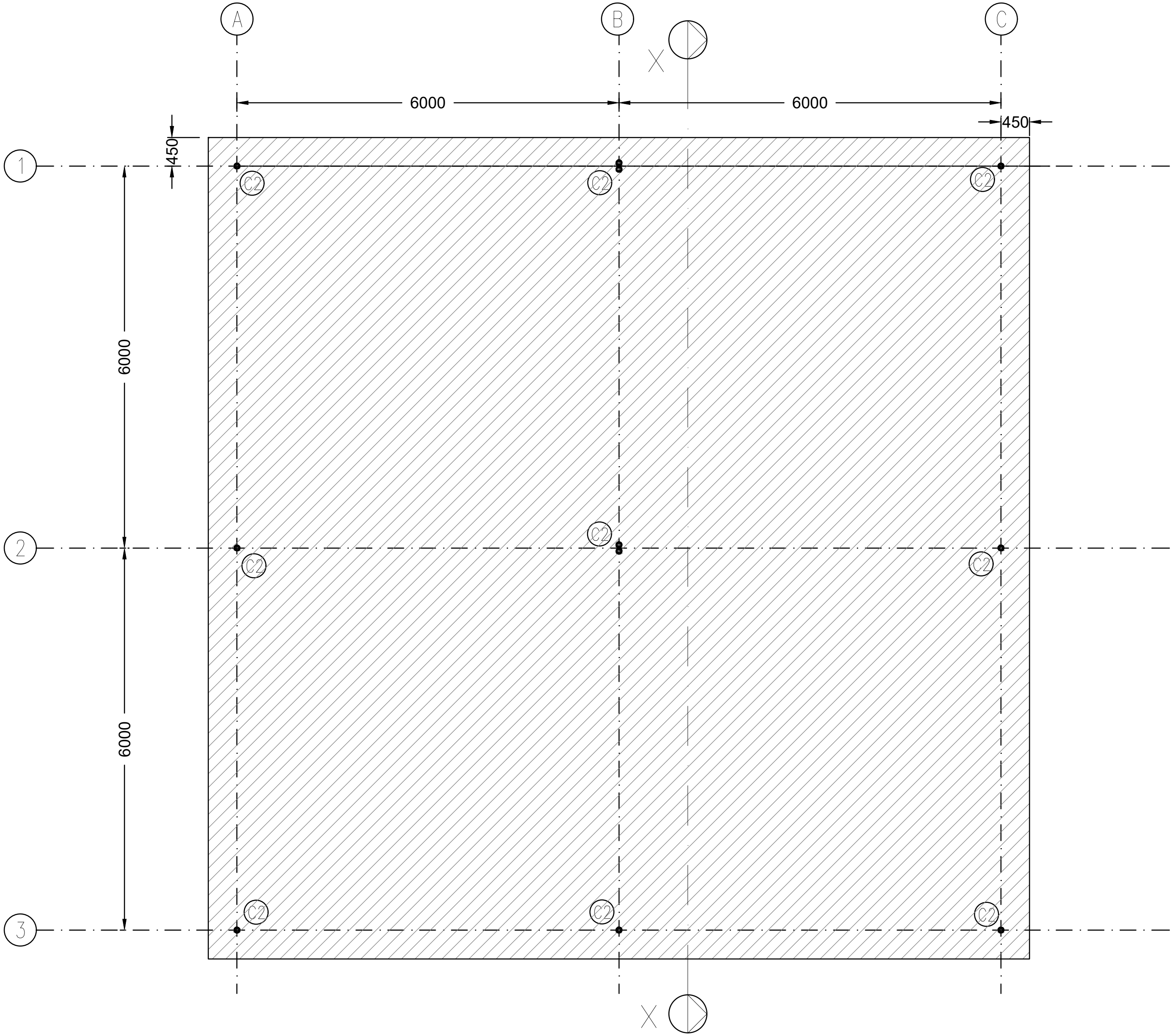

SHED CONCRETE SLAB LAYOUT PLAN

1:100

▨ 100 THICK CONCRETE SLAB ON GROUND
1000 GAUGE POLYTHENE DPM ON
200 COMPACTED HARDCORE
SLAB RFMT: T10@200 BW

Ministry of Environment, Climate Change and Technology
Green Building, Handhuvareehigun
Rep of Maldives

KOCKS INGENIEURE
KOCKS CONSULT GMBH
Stegemannstr. 32-38
Tel: +49 261 1302-400
Email: info@kocks-ing.de

WS
WATER SOLUTIONS PVT LTD
4th FL, M. Niadhurumaage
Tel: +960 3341643
Email: info@water-solutions.biz

Construction of Island Waste Management Centers

SHED
TYPE-A

DESIGNED	KASDARLI
DRAFTED	JALEEL
CHECKED	FAYAZ
PROJECT#	213-98616

AMMENDMENTS

DESIGN

Scale	Paper
AS GIVEN	A4

Drawing No.
9

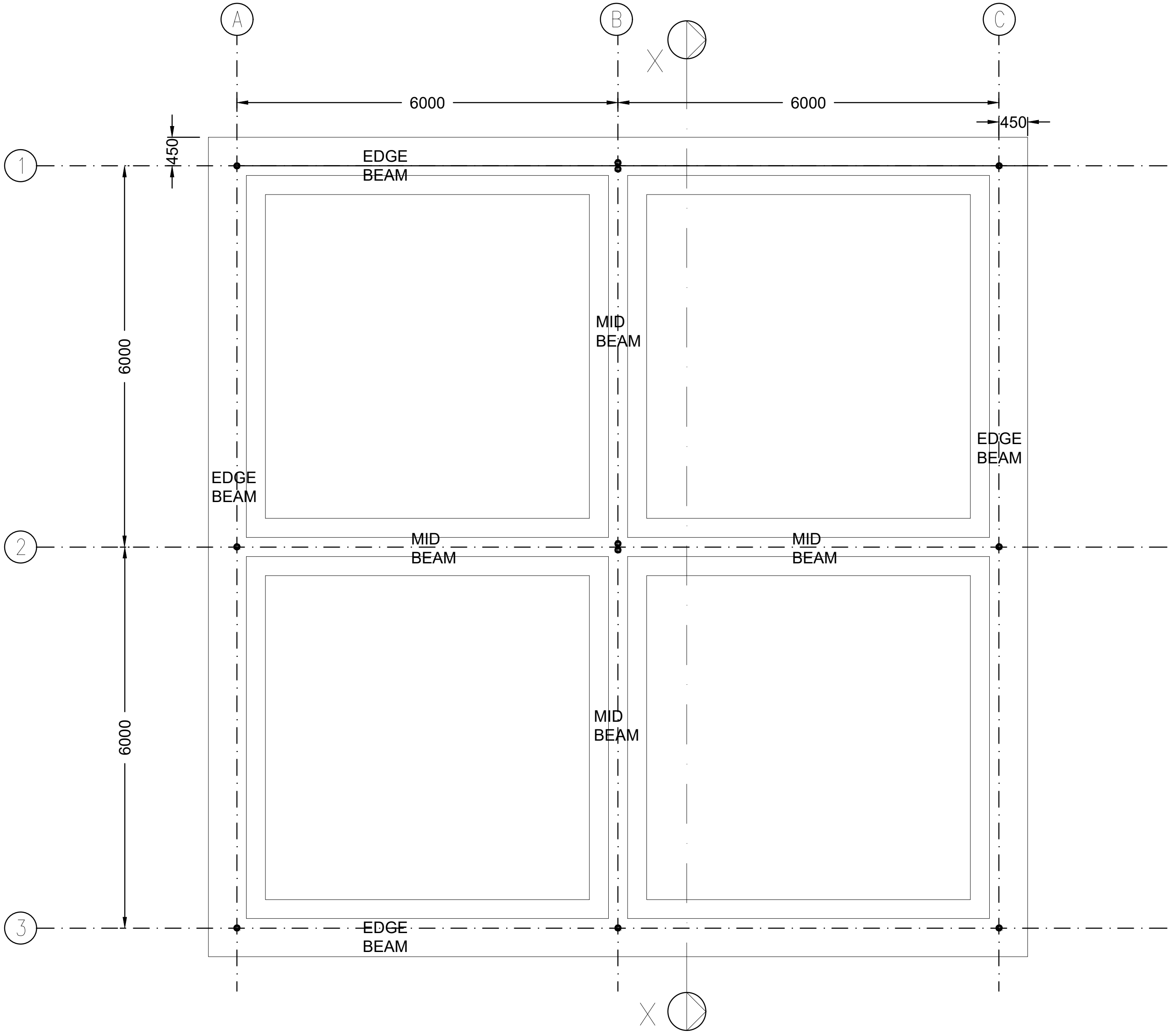
A
B
C
1
2
3
6000
6000
450
450
6000
6000
X
X
EDGE BEAM
MID BEAM
EDGE BEAM
EDGE BEAM
MID BEAM
MID BEAM
MID BEAM
EDGE BEAM

SHED CONCRETE BEAM LAYOUT PLAN

1:100

Ministry of Environment, Climate Change and Technology
Green Building, Handhuvareehigun
Rep of Maldives

KOCKS INGENIEURE
KOCKS CONSULT GMBH
Stegemannstr. 32-38
Tel: +49 261 1302-400
Email: info@kocks-ing.de

WATER SOLUTIONS PVT LTD
4th FL, M. Niadhurumaage
Tel: +960 3341643
Email: info@water-solutions.biz

Construction of Island Waste Management Centers

SHED
TYPE-A

DESIGNED	KASDARLI
DRAFTED	JALEEL
CHECKED	FAYAZ
PROJECT#	213-98616

AMMENDMENTS

DESIGN

Scale	Paper
AS GIVEN	A4

Drawing No.
10

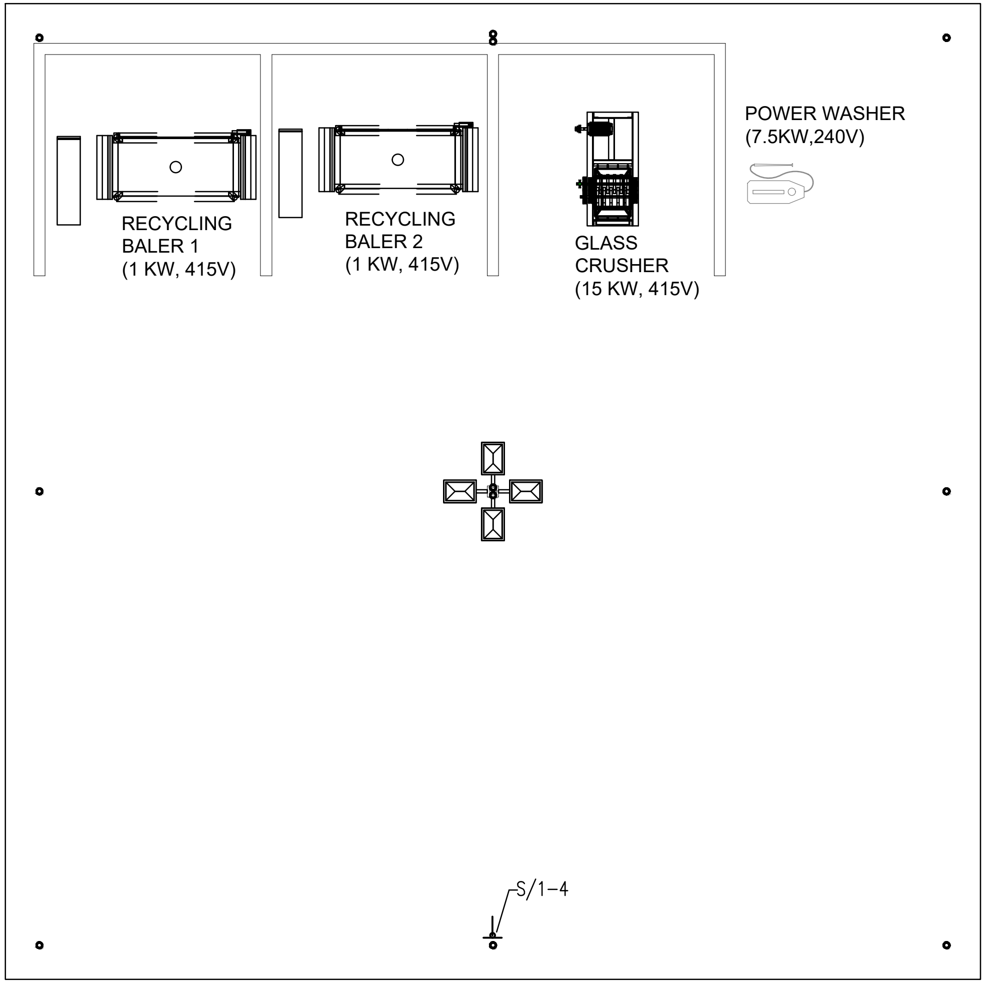
POWER WASHER
(7.5KW,240V)
RECYCLING
BALER 1
(1 KW, 415V)
RECYCLING
BALER 2
(1 KW, 415V)
GLASS
CRUSHER
(15 KW, 415V)
S/1-4

LIGHTING & POWER LAYOUT

1:100

ELECTRICAL LEGEND

⊠	MERCURY FLOOD LED LIGHT
⊢	ONE-WAY SWITCH (SINGLE GANG)
●	WATERPROOF WALL SOCKET OUTLET (SINGLE GANG) 1.2 AFFL
●+	WATERPROOF SERVICE SOCKET OUTLET (SINGLE GANG) 1.8 AFFL
◪	D-BOARD

NOTE:

ALL HEIGHTS ARE FROM FINISHED FLOOR LEVEL

ALL WALL SOCKET OUTLETS ARE 0.3M AFFL
EXCEPT WHERE STATED

ALL LIGHT SWITCHES ARE AT 1.2M AFFL

ALL MACHINERY WILL BE SUPPLIED BY CLIENT

Ministry of Environment, Climate
Change and Technology
Green Building, Handhuvareehigun
Rep of Maldives

KOCKS
INGENIEURE
KOCKS CONSULT GMBH
Stegemannstr. 32-38
Tel: +49 261 1302-400
Email: info@kocks-ing.de

WS
WATER SOLUTIONS PVT LTD
4th FL, M. Niadhurumaage
Tel: +960 3341643
Email: info@water-solutions.biz

Construction of Island Waste
Management Centers

SHED
TYPE-A

DESIGNED	KASDARLI
DRAFTED	JALEEL
CHECKED	FAYAZ
PROJECT#	213-98616

AMMENDMENTS

DESIGN

Scale	Paper
AS GIVEN	A4

Drawing No.

11

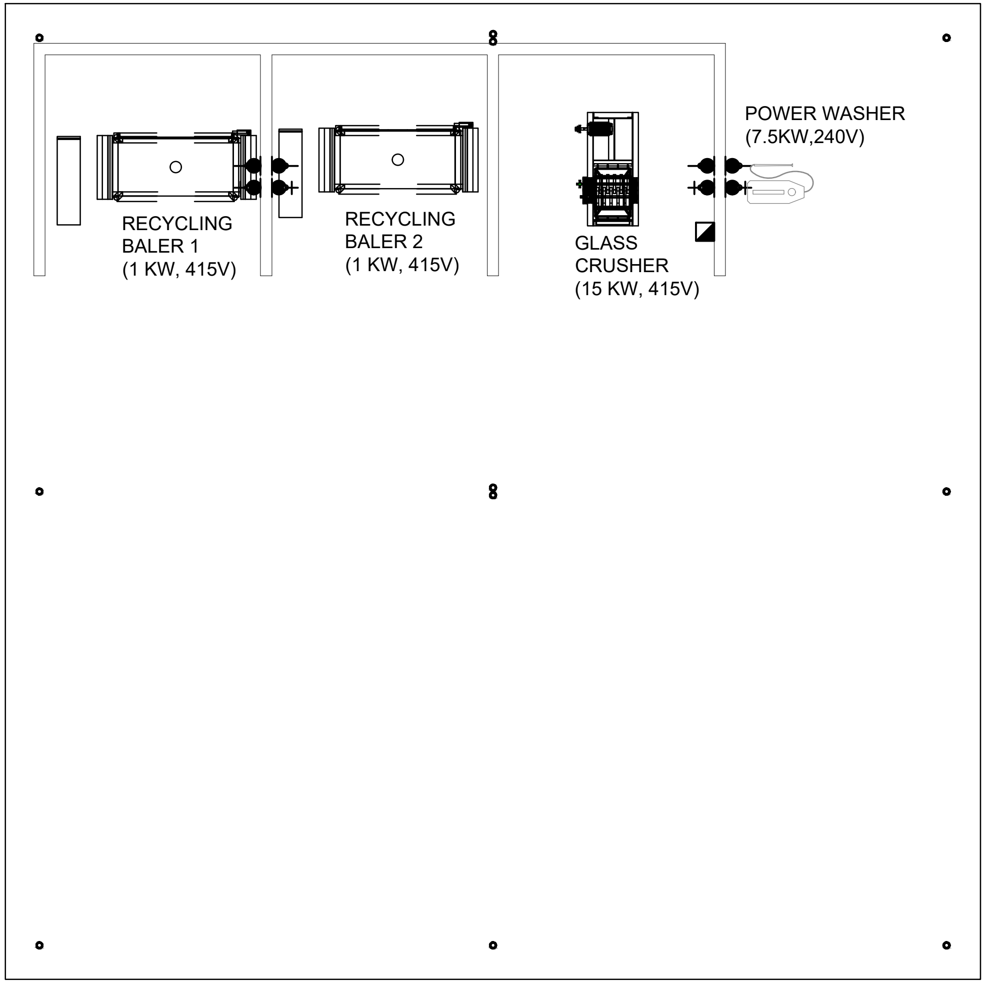
POWER WASHER
(7.5KW,240V)
RECYCLING
BALER 1
(1 KW, 415V)
RECYCLING
BALER 2
(1 KW, 415V)
GLASS
CRUSHER
(15 KW, 415V)

LIGHTING & POWER LAYOUT

1:100

ELECTRICAL LEGEND

⊠	MERCURY FLOOD LED LIGHT
⊢	ONE-WAY SWITCH (SINGLE GANG)
●	WATERPROOF WALL SOCKET OUTLET (SINGLE GANG) 1.2 AFFL
●+	WATERPROOF SERVICE SOCKET OUTLET (SINGLE GANG)
◪	D-BOARD

NOTE:

ALL HEIGHTS ARE FROM FINISHED FLOOR LEVEL

ALL WALL SOCKET OUTLETS ARE 0.3M AFFL
EXCEPT WHERE STATED

ALL LIGHT SWITCHES ARE AT 1.2M AFFL

Ministry of Environment, Climate
Change and Technology
Green Building, Handhuvareehigun
Rep of Maldives

KOCKS
INGENIEURE
KOCKS CONSULT GMBH
Stegemannstr. 32-38
Tel: +49 261 1302-400
Email: info@kocks-ing.de

WATER SOLUTIONS PVT LTD
4th FL, M. Niadhurumaage
Tel: +960 3341643
Email: info@water-solutions.biz

Construction of Island Waste
Management Centers

SHED
TYPE-A

DESIGNED	KASDARLI
DRAFTED	JALEEL
CHECKED	FAYAZ
PROJECT#	213-98616

AMMENDMENTS

DESIGN

Scale	Paper
AS GIVEN	A4

Drawing No.
12