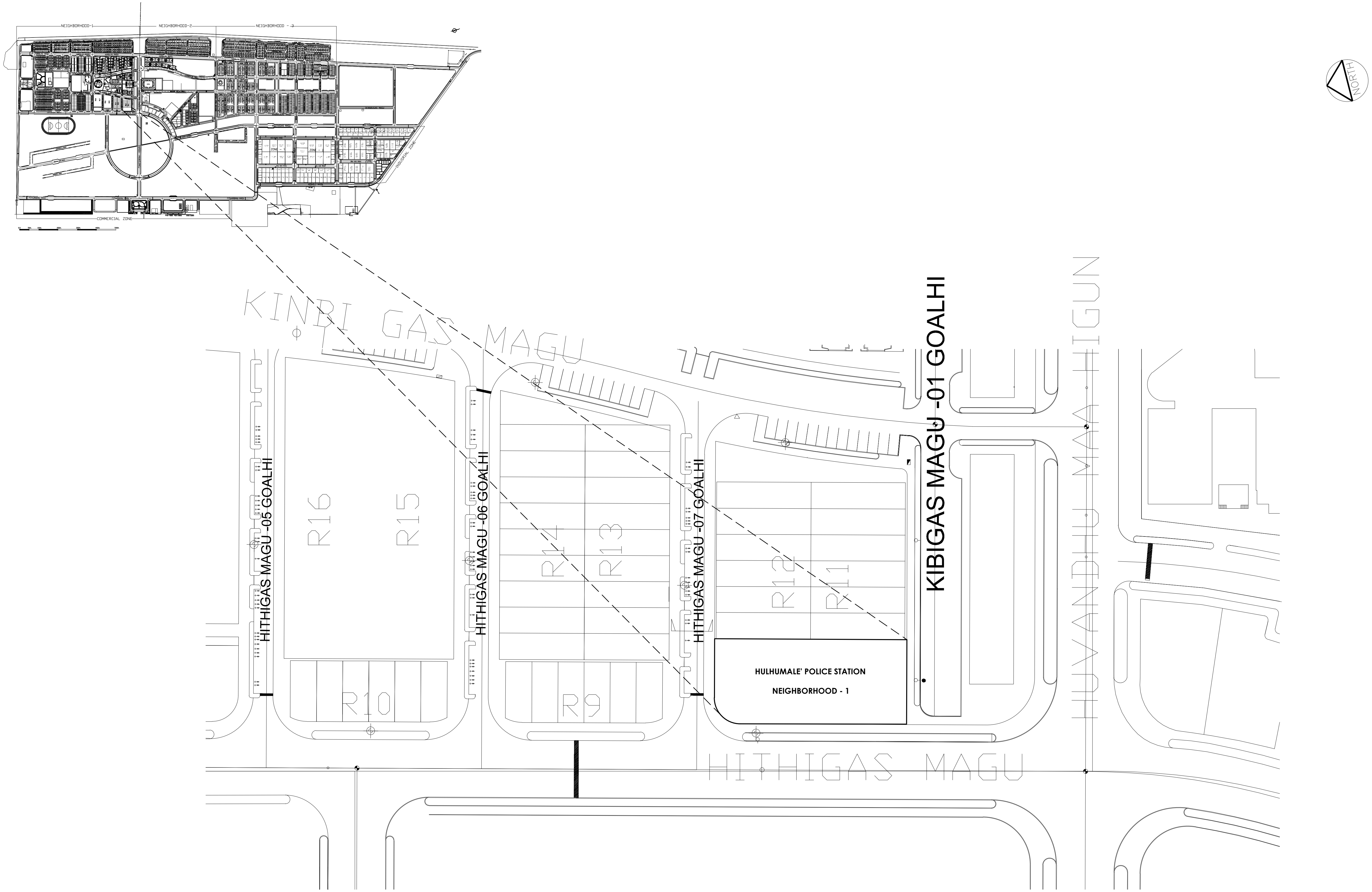
NEIGHBORHOOD - 1
NEIGHBORHOOD - 2
NEIGHBORHOOD - 3
INDUSTRIAL ZONE
COMMERCIAL ZONE
NORTH
KINBI GAS MAGU
KIBIGAS MAGU -01 GOALHI
HUVANDHU MAA HIGUN
HITHIGAS MAGU -05 GOALHI
HITHIGAS MAGU -06 GOALHI
HITHIGAS MAGU -07 GOALHI
R16
R15
R14
R13
R12
R11
R10
R9
HULHUMALE' POLICE STATION
NEIGHBORHOOD - 1
HITHIGAS MAGU

LOCATION PLAN

NTS

INFRASTRUCTURE UNIT **FINANCE DEPARTMENT** **MALDIVES POLICE SERVICE** **MALE' REPUBLIC OF MALDIVES**	**PROJECT TITLE** **HULHUMALE' POLICE STATION NEIGHBORHOOD - 1**	RECOMMENDATION APPROVED BY **ISMAIL NAVEEN** CHIEF SUPERINTENDENT OF POLICE	DESIGN APPROVED BY **AZEEM WAHEED** CHIEF INSPECTOR OF POLICE	APPROVED BY **AHMED MOHAMED** CHIEF SUPERINTENDENT OF POLICE	ARCHITECT / DESIGNER **ISMAIL RAFEEU** POLICE STAFF SERGEANT	DRAWN BY **ISMAIL RAFEEU** POLICE STAFF SERGEANT	DATE **15 - 02 - 2015**
					STRUCTURAL ENGINEER **RAMEEZ** ADEPT MALDIVES PVT LTD	CHECKED BY **ABDUL WAHID MOHAMED** ADEPT MALDIVES PVT LTD	REVISED DATE

DRAWING NO **A 01**

SHEET NO **01/**

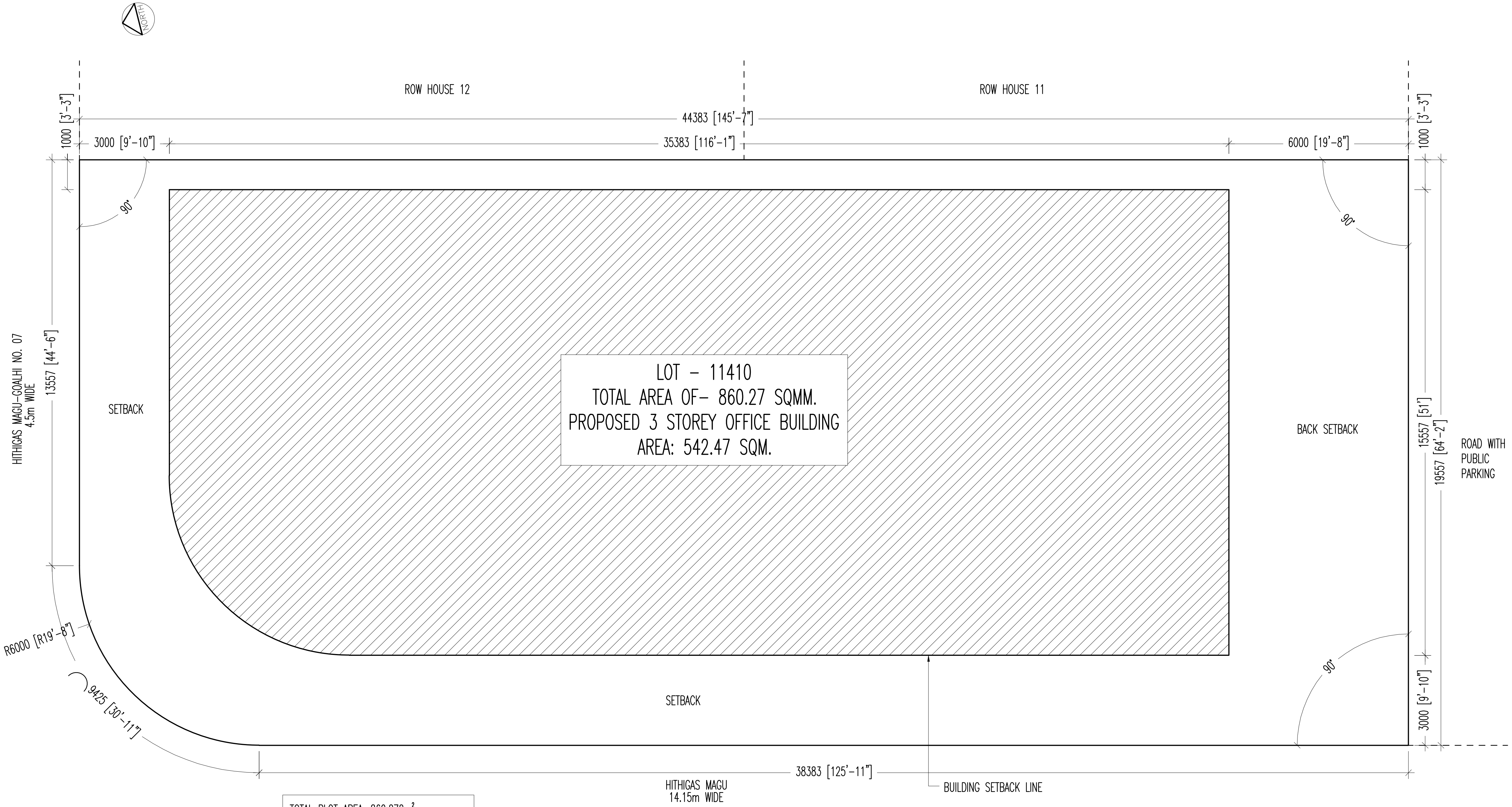
NORTH
ROW HOUSE 12
ROW HOUSE 11
44383 [145'-7"]
3000 [9'-10"]
35383 [116'-1"]
6000 [19'-8"]
1000 [3'-3"]
1000 [3'-3"]
90°
90°
90°
HITHIGAS MAGU-GOALHI NO. 07
4.5m WIDE
13557 [44'-6"]
SETBACK
LOT - 11410
TOTAL AREA OF- 860.27 SQMM.
PROPOSED 3 STOREY OFFICE BUILDING
AREA: 542.47 SQM.
BACK SETBACK
15557 [51']
19557 [64'-2"]
ROAD WITH
PUBLIC
PARKING
R6000 [R19'-8"]
9425 [30'-11"]
SETBACK
3000 [9'-10"]
38383 [125'-11"]
HITHIGAS MAGU
14.15m WIDE
BUILDING SETBACK LINE

SITE PLAN

SCALE 1:150

TOTAL PLOT AREA: 860.272m^2
FOOTPRINT AREA: 542.467m^2
OPEN AREA: 59.20m^2
TOTAL FLOOR AREA: 636.67m^2
LONGEST LENGTH OF FOOTPRINT: 30.480m
WIDTH COEFFICIENT: 10.186m

INFRASTRUCTURE UNIT
FINANCE DEPARTMENT
MALDIVES POLICE SERVICE
MALE' REPUBLIC OF MALDIVES

PROJECT TITLE
HULHUMALE' POLICE STATION
NEIGHBORHOOD - 1

RECOMMENDATION APPROVED BY
ISMAIL NAVEEN
CHIEF SUPERINTENDENT OF POLICE

DESIGN APPROVED BY
AZEEM WAHEED
CHIEF INSPECTOR OF POLICE

APPROVED BY
AHMED MOHAMED
CHIEF SUPERINTENDENT OF POLICE

ARCHITECT / DESIGNER
ISMAIL RAFEEU
POLICE STAFF SERGEANT

DRAWN BY
ISMAIL RAFEEU
POLICE STAFF SERGEANT

STRUCTURAL ENGINEER
RAMEEZ
ADEPT MALDIVES PVT LTD

CHECKED BY
ABDUL WAHID MOHAMED
ADEPT MALDIVES PVT LTD

DATE
15 - 02 - 2015

REVISED DATE

DRAWING NO
A 02

SHEET NO
02/

The drawings, concept and design contained are the properties of Maldives Police Service. Use of any kind of copy of whole or part of this drawing, concept or design or use on other projects or sites other than that specified on this drawing is strictly prohibited.

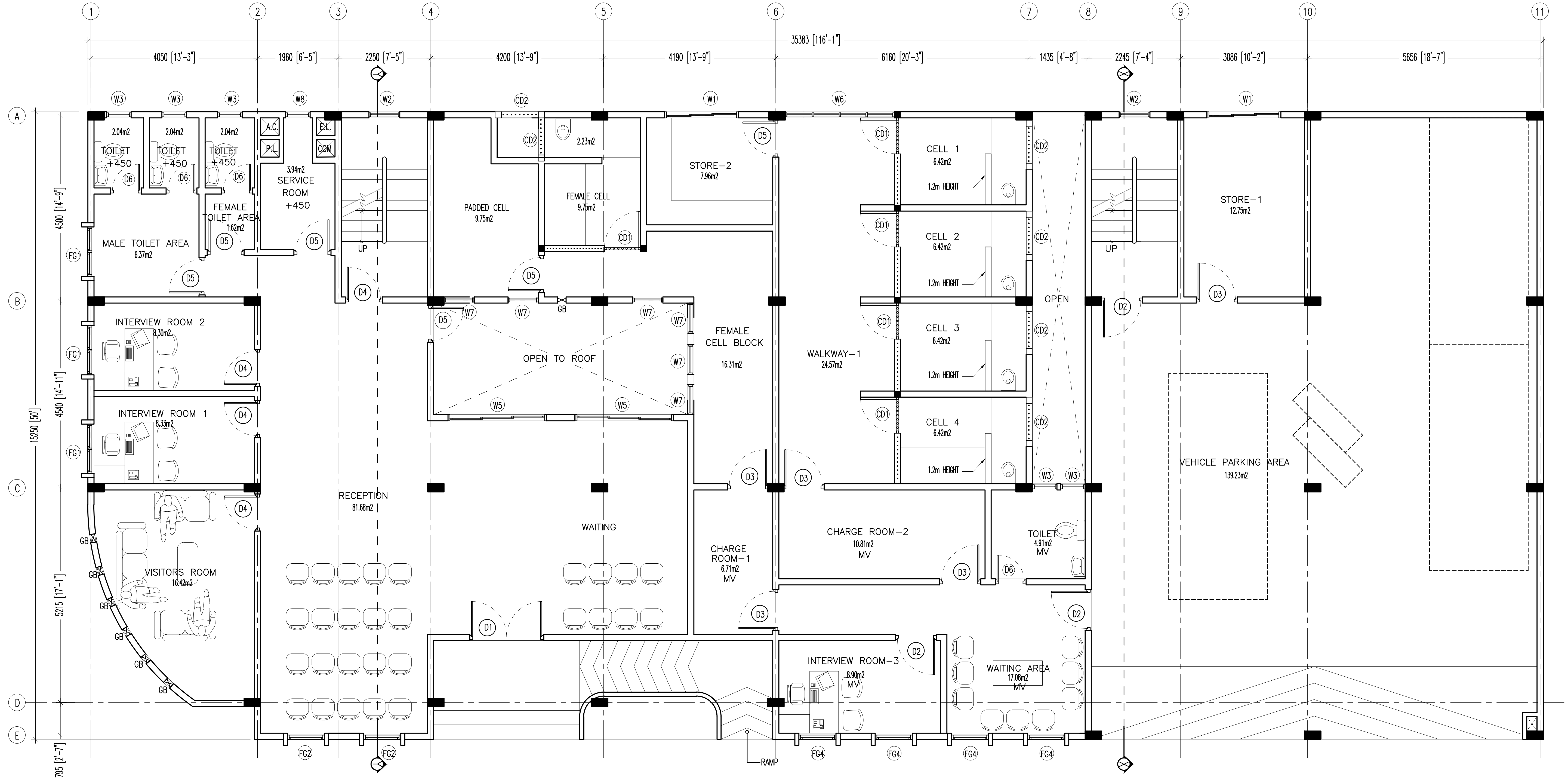
1
2
3
4
5
6
7
8
9
10
11
35383 [116'-1"]
4050 [13'-3"]
1960 [6'-5"]
2250 [7'-5"]
4200 [13'-9"]
4190 [13'-9"]
6160 [20'-3"]
1435 [4'-8"]
2245 [7'-4"]
3086 [10'-2"]
5656 [18'-7"]
A
B
C
D
E
4500 [14'-9"]
4540 [14'-11"]
15250 [50']
5215 [17'-1"]
795 [2'-7"]
W3
W8
W2
CD2
W1
W6
TOILET
+450
2.04m2
D6
A.C.
P.L.
E.L.
COM
3.94m2
SERVICE
ROOM
+450
FEMALE
TOILET AREA
1.62m2
MALE TOILET AREA
6.37m2
D5
D4
FG1
UP
PADDED CELL
9.75m2
FEMALE CELL
9.75m2
2.23m2
CD1
STORE-2
7.96m2
CELL 1
CELL 2
CELL 3
CELL 4
6.42m2
1.2m HEIGHT
OPEN
STORE-1
12.75m2
D3
D2
INTERVIEW ROOM 2
8.30m2
INTERVIEW ROOM 1
8.33m2
W7
GB
OPEN TO ROOF
W5
FEMALE
CELL BLOCK
16.31m2
WALKWAY-1
24.57m2
VEHICLE PARKING AREA
139.23m2
VISITORS ROOM
16.42m2
RECEPTION
81.68m2
WAITING
D1
CHARGE
ROOM-1
6.71m2
MV
CHARGE ROOM-2
10.81m2
MV
TOILET
4.91m2
MV
INTERVIEW ROOM-3
8.90m2
MV
WAITING AREA
17.08m2
MV
FG2
FG4
RAMP

GROUND FLOOR PLAN

SCALE 1:100

INFRASTRUCTURE UNIT
FINANCE DEPARTMENT
MALDIVES POLICE SERVICE
MALE' REPUBLIC OF MALDIVES

PROJECT TITLE

HULHUMALE' POLICE STATION
NEIGHBORHOOD - 1

RECOMMENDATION APPROVED BY **ISMAIL NAVEEN** CHIEF SUPERINTENDENT OF POLICE	DESIGN APPROVED BY **AZEEM WAHEED** CHIEF INSPECTOR OF POLICE	APPROVED BY **AHMED MOHAMED** CHIEF SUPERINTENDENT OF POLICE	ARCHITECT / DESIGNER **ISMAIL RAFEEU** POLICE STAFF SERGEANT	DRAWN BY **ISMAIL RAFEEU** POLICE STAFF SERGEANT	DATE **15 - 02 - 2015**	DRAWING NO **A 03**
			STRUCTURAL ENGINEER **RAMEEZ** ADEPT MALDIVES PVT LTD	CHECKED BY **ABDUL WAHID MOHAMED** ADEPT MALDIVES PVT LTD	REVISED DATE	SHEET NO **03/**

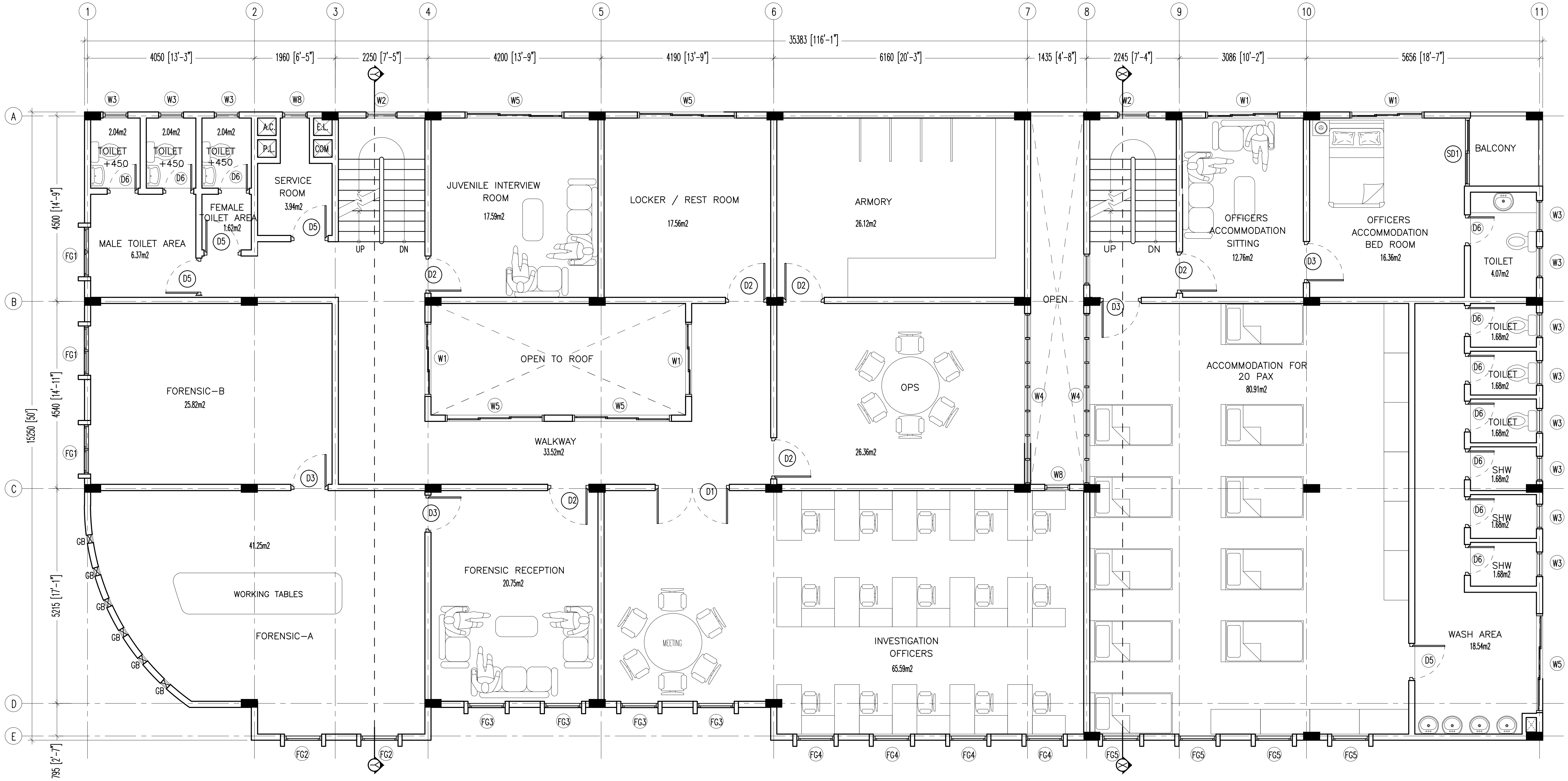
1
2
3
4
5
6
7
8
9
10
11
35383 [116'-1"]
4050 [13'-3"]
1960 [6'-5"]
2250 [7'-5"]
4200 [13'-9"]
4190 [13'-9"]
6160 [20'-3"]
1435 [4'-8"]
2245 [7'-4"]
3086 [10'-2"]
5656 [18'-7"]
A
B
C
D
E
4500 [14'-9"]
4540 [14'-11"]
5215 [17'-1"]
795 [2'-7"]
15250 [50']
W1
W2
W3
W4
W5
W8
D1
D2
D3
D5
D6
SD1
FG1
FG2
FG3
FG4
FG5
GB
2.04m2
TOILET
+450
MALE TOILET AREA
6.37m2
FEMALE TOILET AREA
1.62m2
A.C.
P.L.
E.L.
COM
SERVICE ROOM
3.94m2
UP
DN
JUVENILE INTERVIEW ROOM
17.59m2
LOCKER / REST ROOM
17.56m2
ARMORY
26.12m2
OFFICERS ACCOMMODATION SITTING
12.76m2
OFFICERS ACCOMMODATION BED ROOM
16.36m2
BALCONY
TOILET
4.07m2
OPEN
FORENSIC-B
25.82m2
OPEN TO ROOF
WALKWAY
33.52m2
OPS
26.36m2
ACCOMMODATION FOR 20 PAX
80.91m2
TOILET
1.68m2
SHW
1.68m2
41.25m2
WORKING TABLES
FORENSIC-A
FORENSIC RECEPTION
20.75m2
MEETING
INVESTIGATION OFFICERS
65.59m2
WASH AREA
18.54m2

FIRST FLOOR PLAN

SCALE 1:100

INFRASTRUCTURE UNIT
FINANCE DEPARTMENT
MALDIVES POLICE SERVICE
MALE' REPUBLIC OF MALDIVES

PROJECT TITLE
HULHUMALE' POLICE STATION
NEIGHBORHOOD - 1

RECOMMENDATION APPROVED BY
ISMAIL NAVEEN
CHIEF SUPERINTENDENT OF POLICE

DESIGN APPROVED BY
AZEEM WAHEED
CHIEF INSPECTOR OF POLICE

APPROVED BY
AHMED MOHAMED
CHIEF SUPERINTENDENT OF POLICE

ARCHITECT / DESIGNER
ISMAIL RAFEEU
POLICE STAFF SERGEANT

DRAWN BY
ISMAIL RAFEEU
POLICE STAFF SERGEANT

STRUCTURAL ENGINEER
RAMEEZ
ADEPT MALDIVES PVT LTD

CHECKED BY
ABDUL WAHID MOHAMED
ADEPT MALDIVES PVT LTD

DATE
15 - 02 - 2015

REVISED DATE

DRAWING NO
A 04

SHEET NO
04/

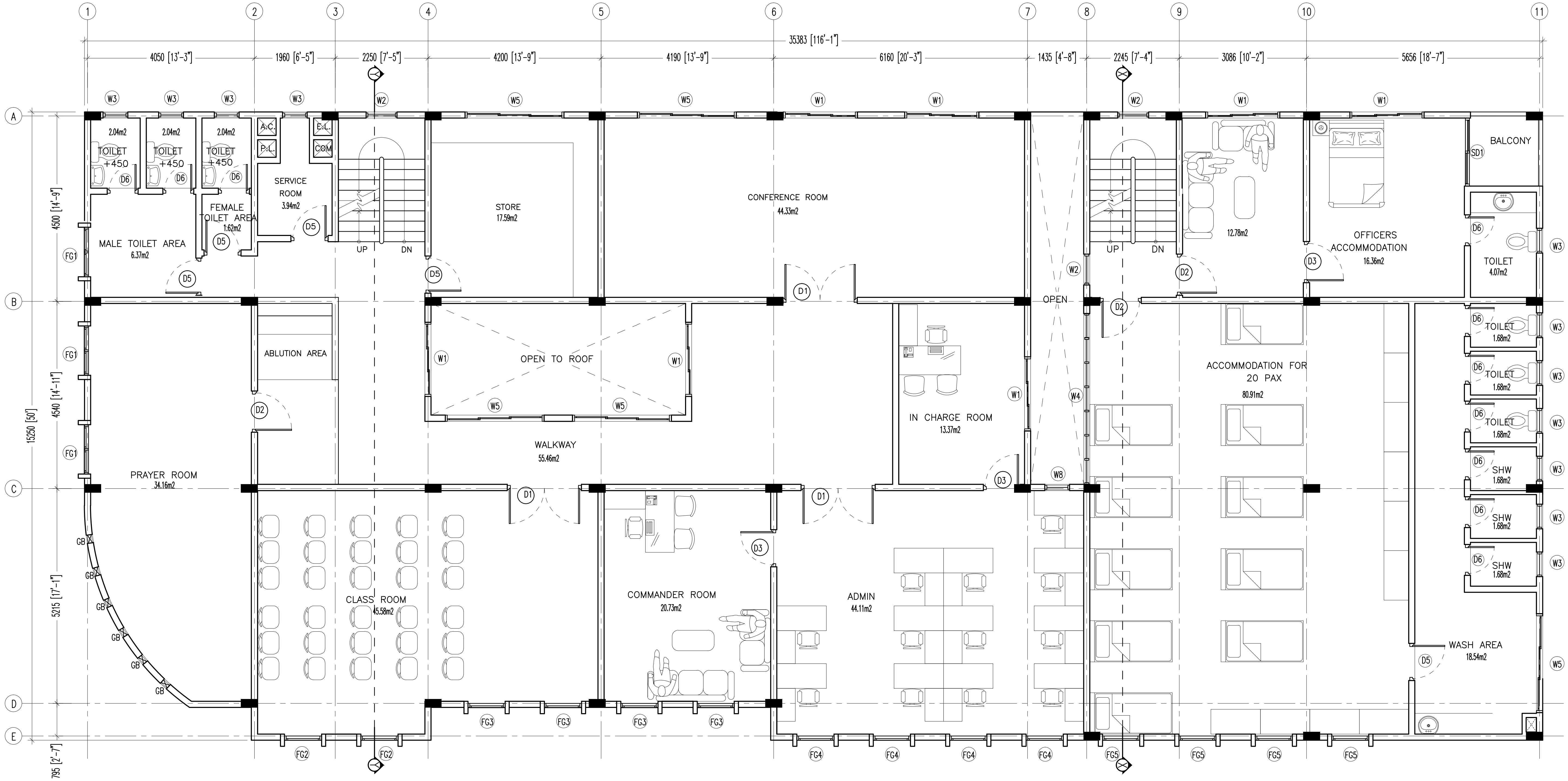
1
2
3
4
5
6
7
8
9
10
11
35383 [116'-1"]
4050 [13'-3"]
1960 [6'-5"]
2250 [7'-5"]
4200 [13'-9"]
4190 [13'-9"]
6160 [20'-3"]
1435 [4'-8"]
2245 [7'-4"]
3086 [10'-2"]
5656 [18'-7"]
A
B
C
D
E
4500 [14'-9"]
4540 [14'-11"]
15250 [50']
5215 [17'-1"]
795 [2'-7"]
W3
W2
W5
W1
2.04m2
TOILET
+450
D6
A.C.
P.L.
E.L.
COM
SERVICE ROOM
3.94m2
FEMALE TOILET AREA
1.62m2
D5
MALE TOILET AREA
6.37m2
FG1
UP
DN
STORE
17.59m2
CONFERENCE ROOM
44.33m2
D1
OPEN
12.78m2
D2
OFFICERS ACCOMMODATION
16.36m2
D3
BALCONY
SD1
TOILET
4.07m2
ABLUTION AREA
OPEN TO ROOF
W4
IN CHARGE ROOM
13.37m2
ACCOMMODATION FOR 20 PAX
80.91m2
TOILET
1.68m2
SHW
1.68m2
PRAYER ROOM
34.16m2
WALKWAY
55.46m2
W8
CLASS ROOM
45.58m2
COMMANDER ROOM
20.73m2
ADMIN
44.11m2
WASH AREA
18.54m2
GB
FG2
FG3
FG4
FG5

SECOND FLOOR PLAN

SCALE 1:100

INFRASTRUCTURE UNIT
FINANCE DEPARTMENT
MALDIVES POLICE SERVICE
MALE' REPUBLIC OF MALDIVES

PROJECT TITLE	RECOMMENDATION APPROVED BY	DESIGN APPROVED BY	APPROVED BY	ARCHITECT / DESIGNER	DRAWN BY	DATE	DRAWING NO
HULHUMALE' POLICE STATION NEIGHBORHOOD - 1	**ISMAIL NAVEEN** CHIEF SUPERINTENDENT OF POLICE	**AZEEM WAHEED** CHIEF INSPECTOR OF POLICE	**AHMED MOHAMED** CHIEF SUPERINTENDENT OF POLICE	**ISMAIL RAFEEU** POLICE STAFF SERGEANT	**ISMAIL RAFEEU** POLICE STAFF SERGEANT	**15 - 02 - 2015**	**A 05**
				STRUCTURAL ENGINEER	CHECKED BY	REVISED DATE	SHEET NO
				RAMEEZ ADEPT MALDIVES PVT LTD	**ABDUL WAHID MOHAMED** ADEPT MALDIVES PVT LTD		**05/**

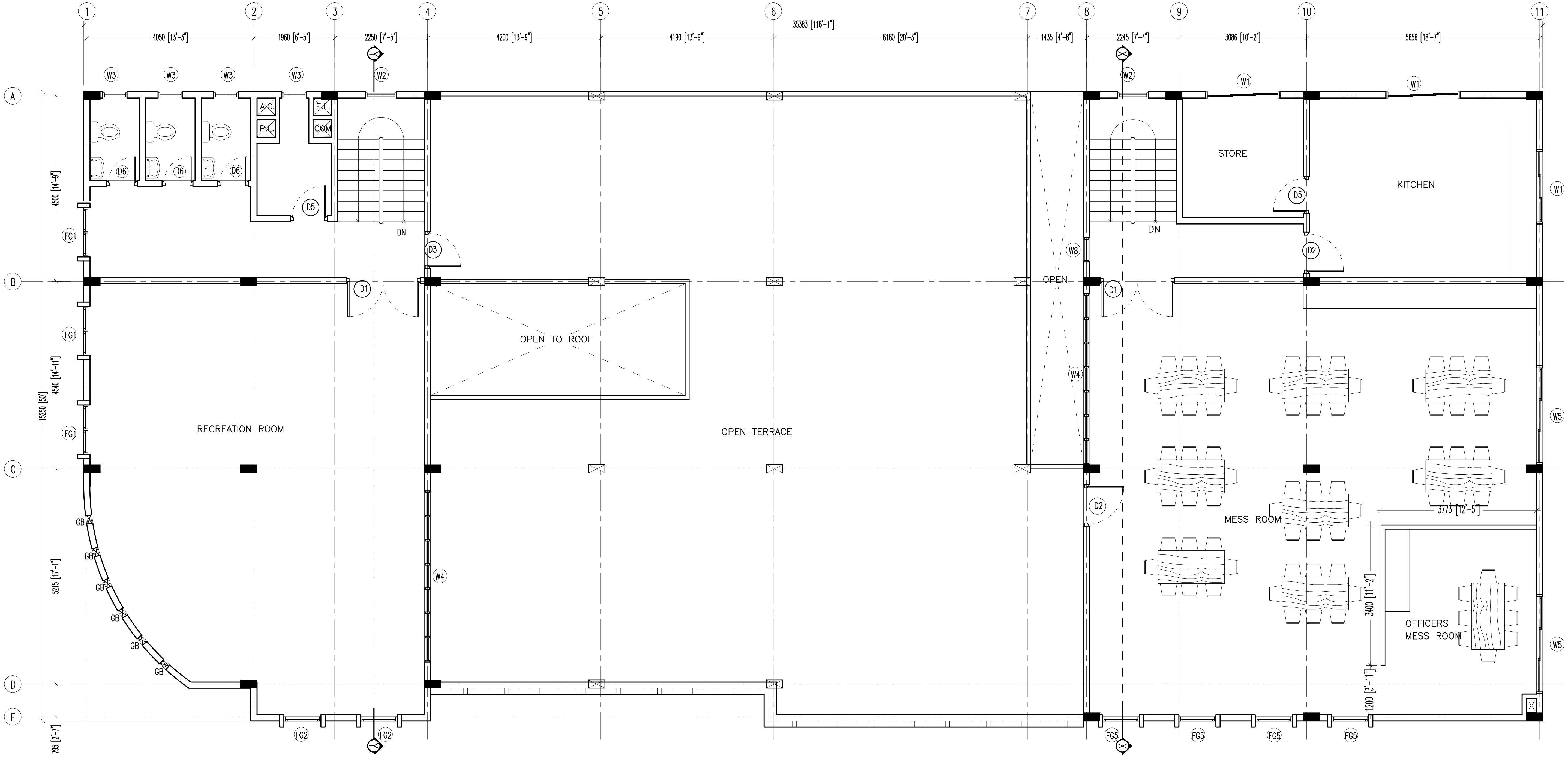
1
2
3
4
5
6
7
8
9
10
11
35383 [116'-1"]
4050 [13'-3"]
1960 [6'-5"]
2250 [7'-5"]
4200 [13'-9"]
4190 [13'-9"]
6160 [20'-3"]
1435 [4'-8"]
2245 [7'-4"]
3086 [10'-2"]
5656 [18'-7"]
A
B
C
D
E
4500 [14'-9"]
4540 [14'-11"]
15250 [50']
5215 [17'-1"]
795 [2'-7"]
W3
W2
W1
W8
W4
W5
A.C.
P.L.
E.L.
COM
D6
D5
D3
D1
D2
DN
FG1
FG2
FG5
GB
STORE
KITCHEN
OPEN
OPEN TO ROOF
RECREATION ROOM
OPEN TERRACE
MESS ROOM
OFFICERS MESS ROOM
3773 [12'-5"]
3400 [11'-2"]
1200 [3'-11"]

TERRACE FLOOR PLAN

SCALE 1:100

INFRASTRUCTURE UNIT
FINANCE DEPARTMENT
MALDIVES POLICE SERVICE
MALE' REPUBLIC OF MALDIVES

PROJECT TITLE

HULHUMALE' POLICE STATION NEIGHBORHOOD - 1

RECOMMENDATION APPROVED BY
ISMAIL NAVEEN
CHIEF SUPERINTENDENT OF POLICE

DESIGN APPROVED BY
AZEEM WAHEED
CHIEF INSPECTOR OF POLICE

APPROVED BY
AHMED MOHAMED
CHIEF SUPERINTENDENT OF POLICE

ARCHITECT / DESIGNER
ISMAIL RAFEEU
POLICE STAFF SERGEANT

STRUCTURAL ENGINEER
RAMEEZ
ADEPT MALDIVES PVT LTD

DRAWN BY
ISMAIL RAFEEU
POLICE STAFF SERGEANT

CHECKED BY
ABDUL WAHID MOHAMED
ADEPT MALDIVES PVT LTD

DATE
15 - 02 - 2015

REVISED DATE

DRAWING NO
A 06

SHEET NO
06/

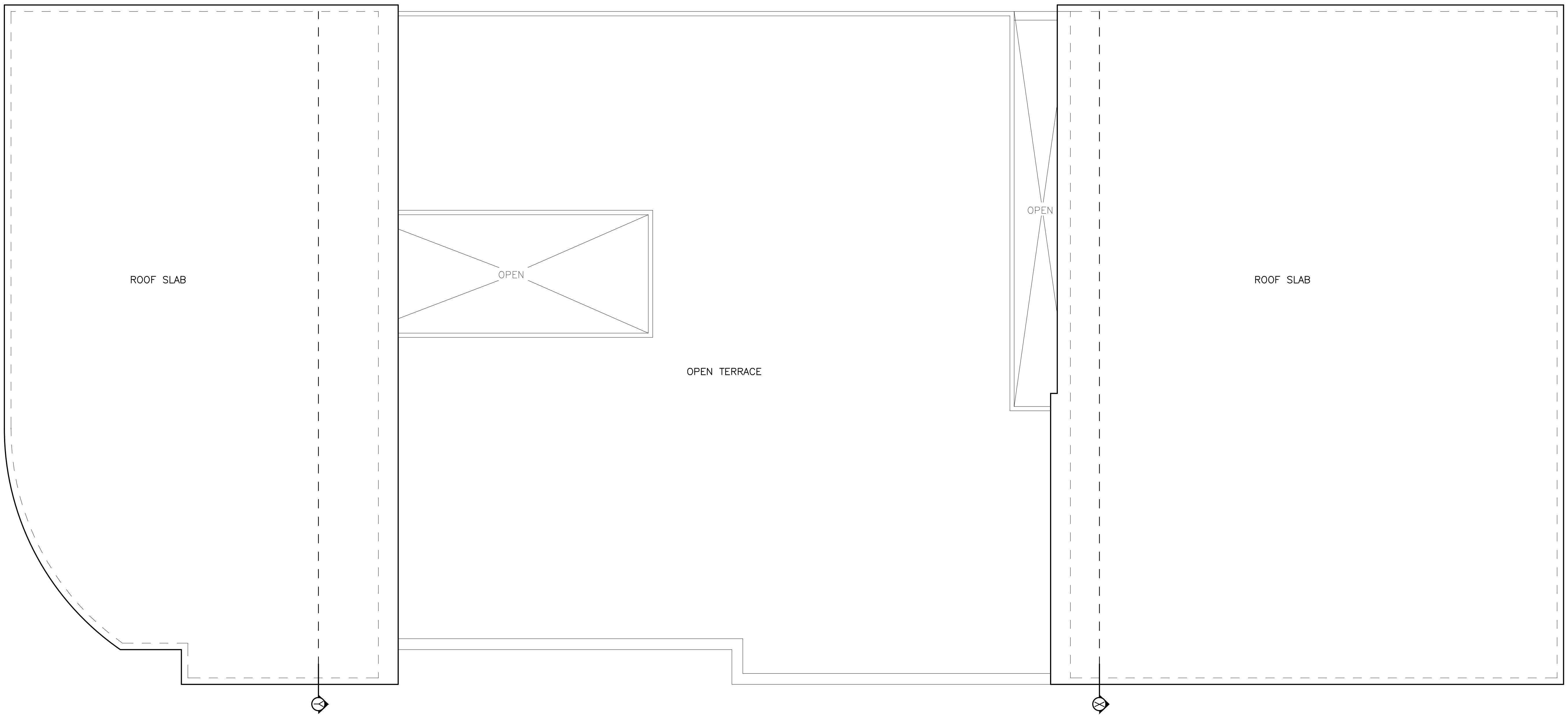

ROOF PLAN

SCALE 1:100

INFRASTRUCTURE UNIT **FINANCE DEPARTMENT** **MALDIVES POLICE SERVICE** **MALE' REPUBLIC OF MALDIVES**	**PROJECT TITLE** **HULHUMALE' POLICE STATION NEIGHBORHOOD - 1**	RECOMMENDATION APPROVED BY **ISMAIL NAVEEN** CHIEF SUPERINTENDENT OF POLICE	DESIGN APPROVED BY **AZEEM WAHEED** CHIEF INSPECTOR OF POLICE	APPROVED BY **AHMED MOHAMED** CHIEF SUPERINTENDENT OF POLICE	ARCHITECT / DESIGNER **ISMAIL RAFEEU** POLICE STAFF SERGEANT	DRAWN BY **ISMAIL RAFEEU** POLICE STAFF SERGEANT	DATE **15 - 02 - 2015**	DRAWING NO **A 07**
					STRUCTURAL ENGINEER **RAMEEZ** ADEPT MALDIVES PVT LTD	CHECKED BY **ABDUL WAHID MOHAMED** ADEPT MALDIVES PVT LTD	REVISED DATE	SHEET NO **07/**

The drawings, concept and design contained are the properties of Maldives Police Service. Use of any kind of copy of whole or part of this drawing, concept or design or use on other projects or sites other than that specified on this drawing is strictly prohibited.

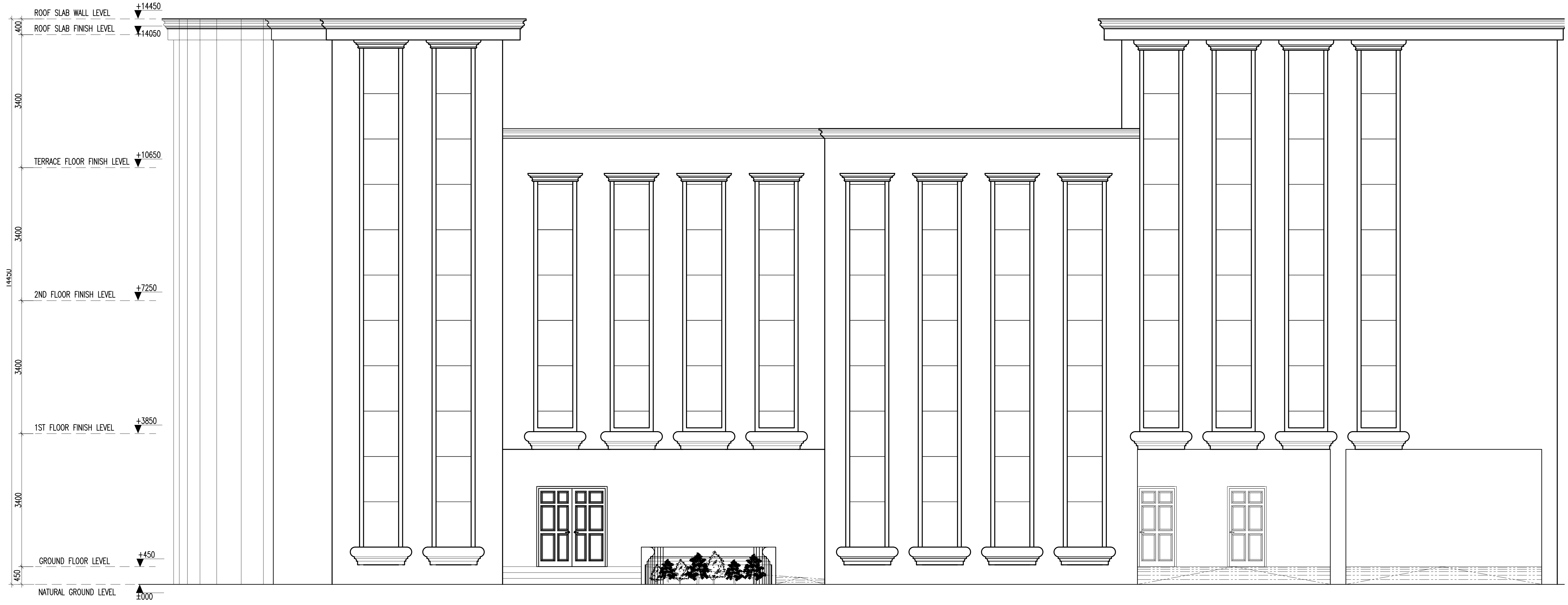
ROOF SLAB WALL LEVEL
+14450
ROOF SLAB FINISH LEVEL
+14050
TERRACE FLOOR FINISH LEVEL
+10650
2ND FLOOR FINISH LEVEL
+7250
1ST FLOOR FINISH LEVEL
+3850
GROUND FLOOR LEVEL
+450
NATURAL GROUND LEVEL
±000
400
3400
3400
14450
3400
3400
450

FRONT ELEVATION

SCALE 1:100

INFRASTRUCTURE UNIT
FINANCE DEPARTMENT
MALDIVES POLICE SERVICE
MALE' REPUBLIC OF MALDIVES

PROJECT TITLE
HULHUMALE' POLICE STATION
NEIGHBORHOOD - 1

RECOMMENDATION APPROVED BY
ISMAIL NAVEEN
CHIEF SUPERINTENDENT OF POLICE

DESIGN APPROVED BY
AZEEM WAHEED
CHIEF INSPECTOR OF POLICE

APPROVED BY
AHMED MOHAMED
CHIEF SUPERINTENDENT OF POLICE

ARCHITECT / DESIGNER
ISMAIL RAFEEU
POLICE STAFF SERGEANT

DRAWN BY
ISMAIL RAFEEU
POLICE STAFF SERGEANT

STRUCTURAL ENGINEER
RAMEEZ
ADEPT MALDIVES PVT LTD

CHECKED BY
ABDUL WAHID MOHAMED
ADEPT MALDIVES PVT LTD

DATE
15 - 02 - 2015

REVISED DATE

DRAWING NO
A 08

SHEET NO
08/

The drawings, concept and design contained are the properties of Maldives Police Service. Use of any kind of copy of whole or part of this drawing, concept or design or use on other projects or sites other than that specified on this drawing is strictly prohibited.

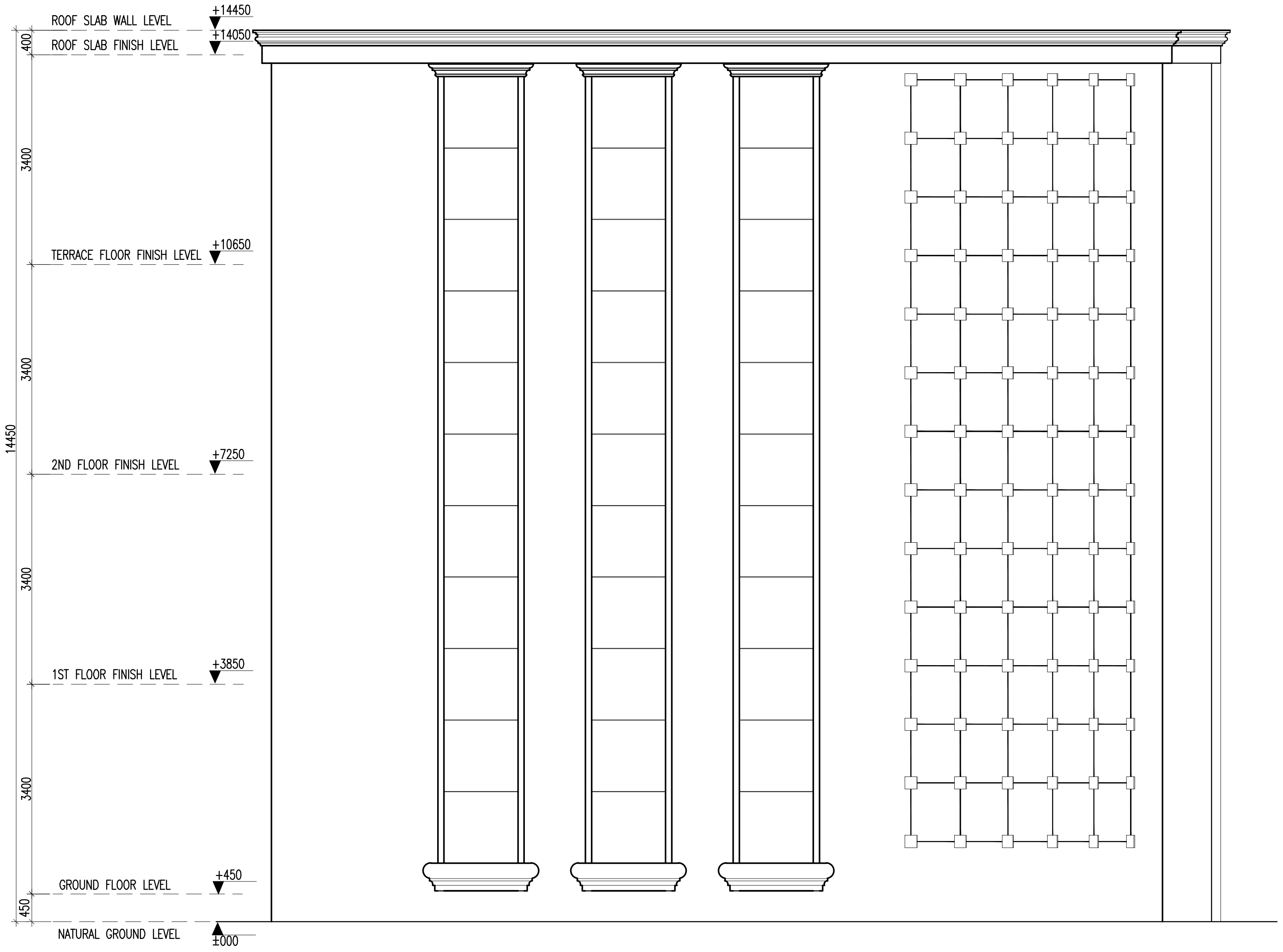
ROOF SLAB WALL LEVEL
+14450
ROOF SLAB FINISH LEVEL
+14050
400
3400
TERRACE FLOOR FINISH LEVEL
+10650
3400
14450
2ND FLOOR FINISH LEVEL
+7250
3400
1ST FLOOR FINISH LEVEL
+3850
3400
GROUND FLOOR LEVEL
+450
450
NATURAL GROUND LEVEL
±000

SIDE ELEVATION

SCALE 1:100

INFRASTRUCTURE UNIT
FINANCE DEPARTMENT
MALDIVES POLICE SERVICE
MALE' REPUBLIC OF MALDIVES

PROJECT TITLE
HULHUMALE' POLICE STATION
NEIGHBORHOOD - 1

RECOMMENDATION APPROVED BY
ISMAIL NAVEEN
CHIEF SUPERINTENDENT OF POLICE

DESIGN APPROVED BY
AZEEM WAHEED
CHIEF INSPECTOR OF POLICE

APPROVED BY
AHMED MOHAMED
CHIEF SUPERINTENDENT OF POLICE

ARCHITECT / DESIGNER
ISMAIL RAFEEU
POLICE STAFF SERGEANT

STRUCTURAL ENGINEER
RAMEEZ
ADEPT MALDIVES PVT LTD

DRAWN BY
ISMAIL RAFEEU
POLICE STAFF SERGEANT

CHECKED BY
ABDUL WAHID MOHAMED
ADEPT MALDIVES PVT LTD

DATE
15 - 02 - 2015

REVISED DATE

DRAWING NO
A 09

SHEET NO
09/

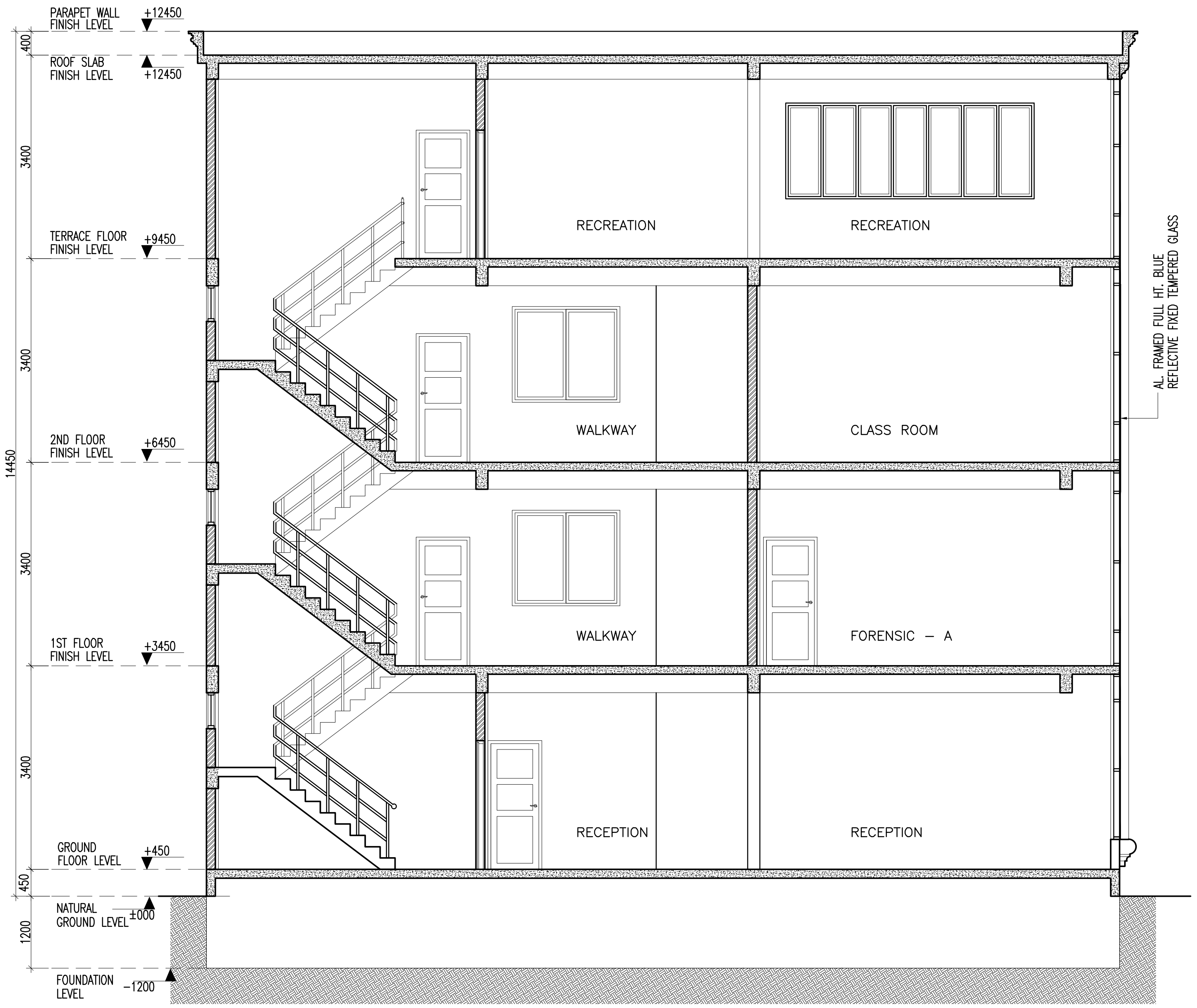
PARAPET WALL FINISH LEVEL +12450
ROOF SLAB FINISH LEVEL +12450
TERRACE FLOOR FINISH LEVEL +9450
2ND FLOOR FINISH LEVEL +6450
1ST FLOOR FINISH LEVEL +3450
GROUND FLOOR LEVEL +450
NATURAL GROUND LEVEL ±000
FOUNDATION LEVEL −1200
400
3400
3400
3400
3400
450
1200
14450
RECREATION
RECREATION
WALKWAY
CLASS ROOM
WALKWAY
FORENSIC – A
RECEPTION
RECEPTION
AL. FRAMED FULL HT. BLUE
REFLECTIVE FIXED TEMPERED GLASS

SECTION : Y - Y

SCALE 1:100

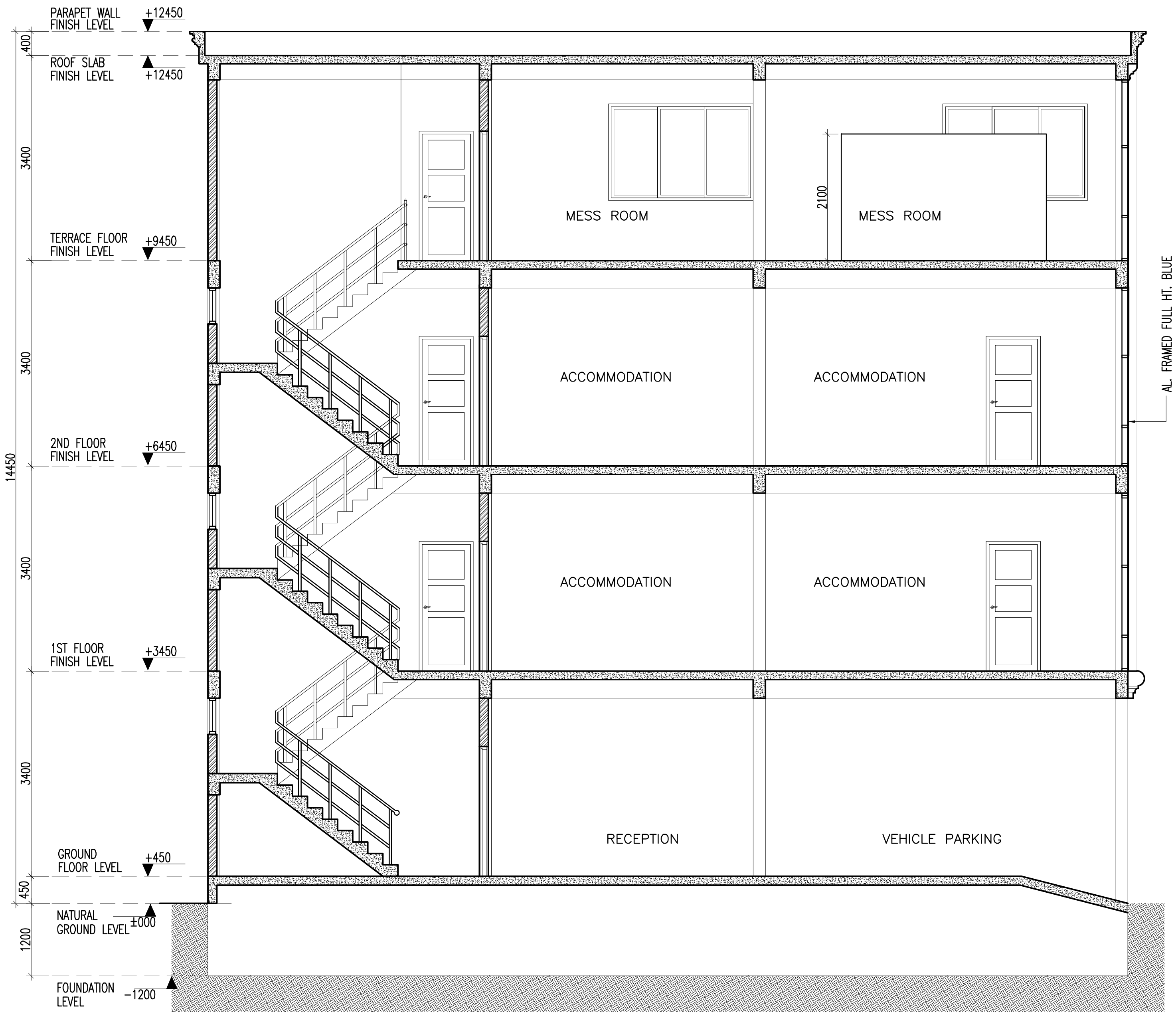
PARAPET WALL FINISH LEVEL +12450
ROOF SLAB FINISH LEVEL +12450
TERRACE FLOOR FINISH LEVEL +9450
2ND FLOOR FINISH LEVEL +6450
1ST FLOOR FINISH LEVEL +3450
GROUND FLOOR LEVEL +450
NATURAL GROUND LEVEL ±000
FOUNDATION LEVEL −1200
400
3400
3400
3400
3400
450
1200
14450
2100
MESS ROOM
MESS ROOM
ACCOMMODATION
ACCOMMODATION
ACCOMMODATION
ACCOMMODATION
RECEPTION
VEHICLE PARKING
AL. FRAMED FULL HT. BLUE
REFLECTIVE FIXED TEMPERED GLASS

SECTION : X - X

SCALE 1:100

INFRASTRUCTURE UNIT
FINANCE DEPARTMENT
MALDIVES POLICE SERVICE
MALE' REPUBLIC OF MALDIVES

PROJECT TITLE
HULHUMALE' POLICE STATION
NEIGHBORHOOD - 1

RECOMMENDATION APPROVED BY
ISMAIL NAVEEN
CHIEF SUPERINTENDENT OF POLICE

DESIGN APPROVED BY
AZEEM WAHEED
CHIEF INSPECTOR OF POLICE

APPROVED BY
AHMED MOHAMED
CHIEF SUPERINTENDENT OF POLICE

ARCHITECT / DESIGNER
ISMAIL RAFEEU
POLICE STAFF SERGEANT

STRUCTURAL ENGINEER
RAMEEZ
ADEPT MALDIVES PVT LTD

DRAWN BY
ISMAIL RAFEEU
POLICE STAFF SERGEANT

CHECKED BY
ABDUL WAHID MOHAMED
ADEPT MALDIVES PVT LTD

DATE
15 - 02 - 2015

REVISED DATE

DRAWING NO
A 10

SHEET NO
10/

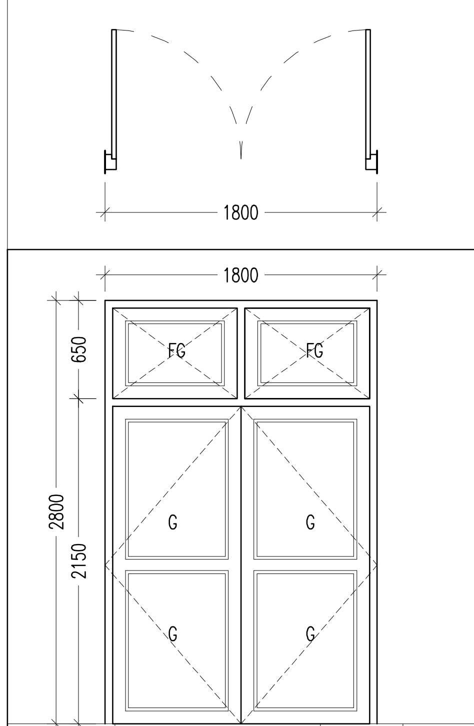
1800
1800
650
2800
2150
FG
FG
G
G
G
G

DOOR NO.	D1	AREA	QTY
FRAM	Timber framed door	3.50	–
REMARKS	–		

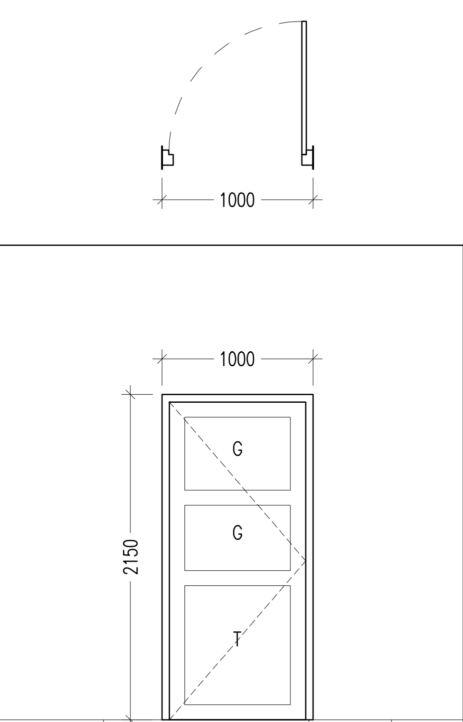
1000
1000
2150
G
G
T

DOOR NO.	D2	AREA	QTY
FRAM	Timber framed door	1.89	–
REMARKS	–		

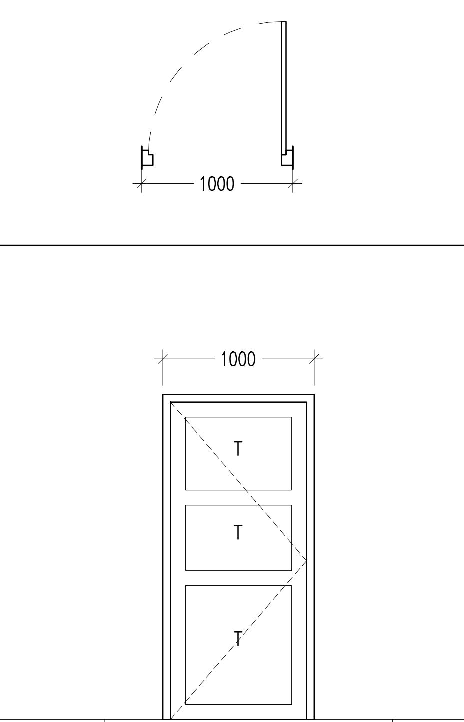
1000
1000
2150
T
T
T

DOOR NO.	D3	AREA	QTY
FRAM	Timber framed door	1.89	–
REMARKS	–		

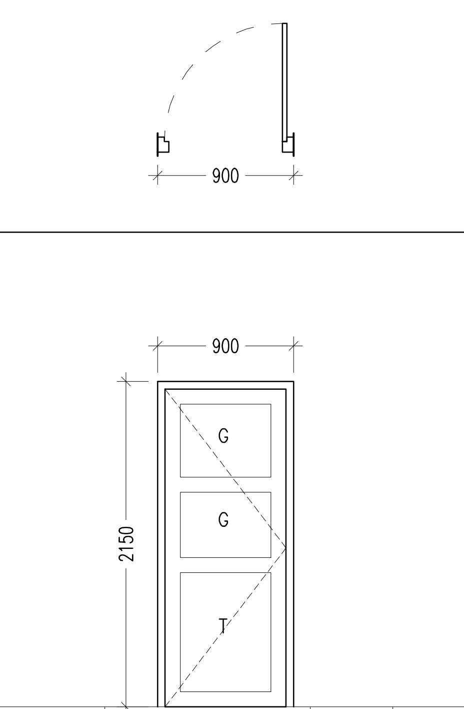
900
900
2150
G
G
T

DOOR NO.	D4	AREA	QTY
FRAM	Timber framed door	1.67	–
REMARKS	–		

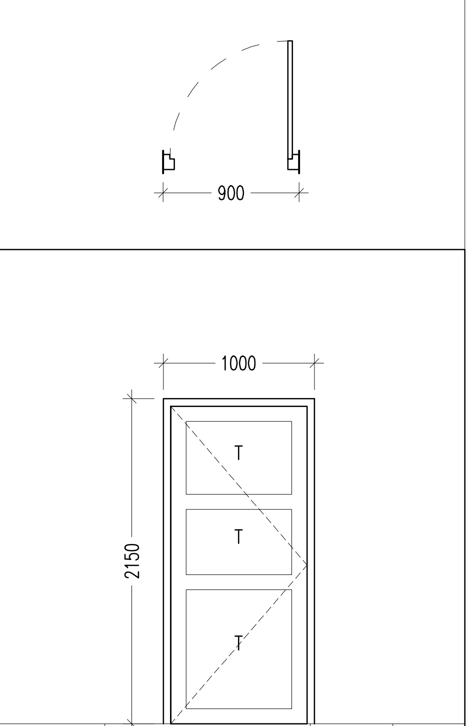
900
1000
2150
T
T
T

DOOR NO.	D5	AREA	QTY
FRAM	Timber framed door	1.89	–
REMARKS	–		

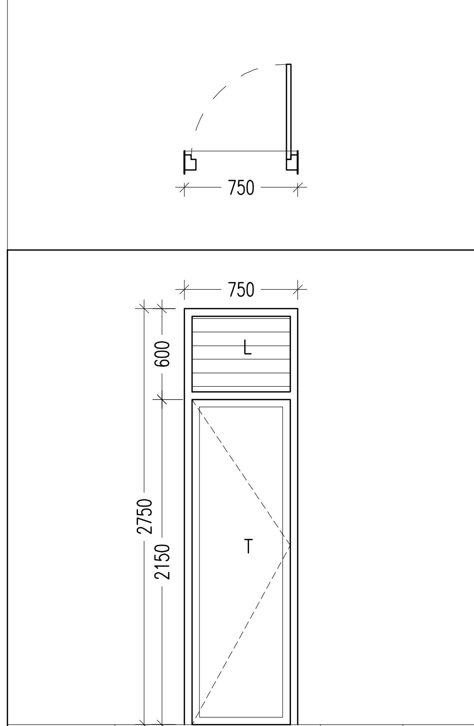
750
750
600
2750
2150
L
T

DOOR NO.	D6	AREA	QTY
FRAM	Timber framed door	1.72	–
REMARKS	Apply water proofing agent on both sides		

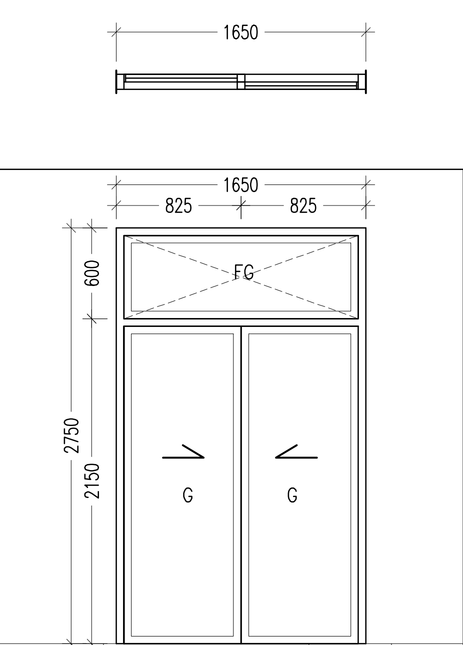
1650
1650
825
825
600
2750
2150
FG
G
G

DOOR NO.	SD1	AREA	QTY
FRAM	Aluminum framed door	3.25	–
REMARKS	–		

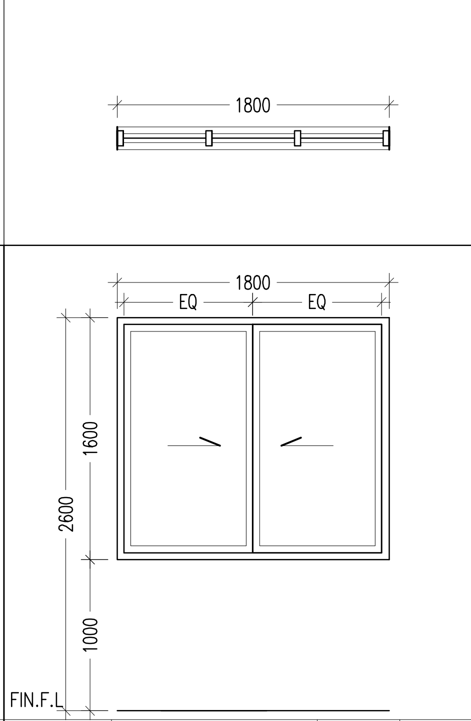
1800
1800
EQ
EQ
1600
2600
1000
FIN.F.L

WINDOW NO.	W1	AREA	QTY
FRAME	Aluminium frame	1.28	–
REMARKS	_		

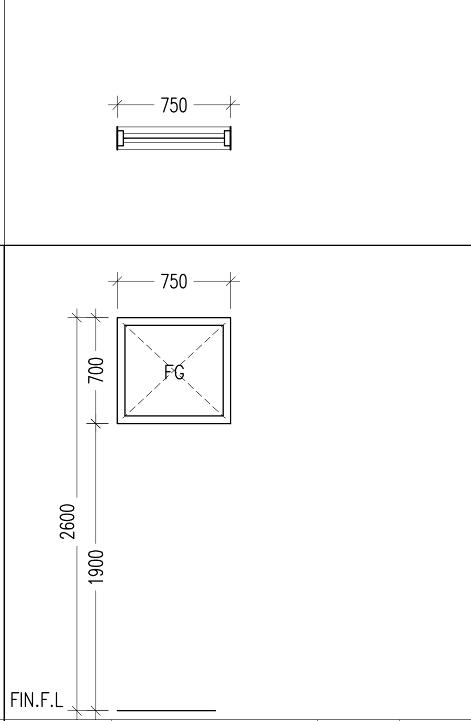
750
750
700
2600
1900
FG
FIN.F.L

WINDOW NO.	W2	AREA	QTY
FRAME	Aluminium frame	0.00	–
REMARKS	_		

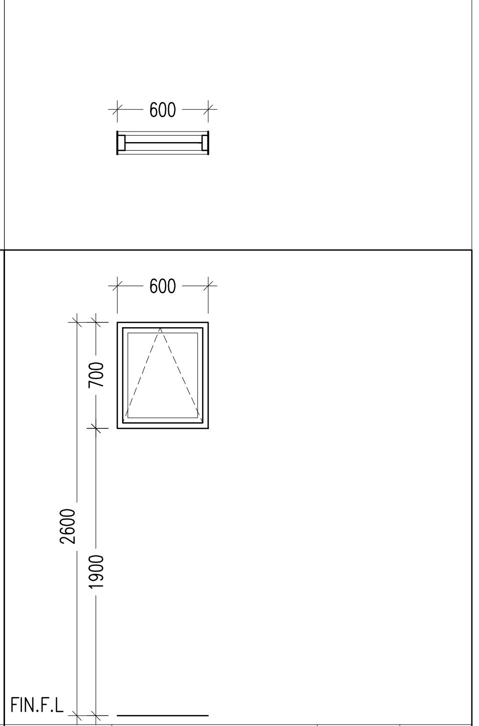
600
600
700
2600
1900
FIN.F.L

WINDOW NO.	W3	AREA	QTY
FRAME	Aluminium frame	0.33	–
REMARKS	_		

KEY:

G: GLASS
T: TIMBER
FAL: FIXED ALUMINUM LOUVERS

NOTE:

ALL MEASUREMENTS TO BE CHECKED ON SITE BEFORE FABRICATION

GROUND FLOOR SHOP AND ENTRY DOOR OPENS INSIDE AS SHOWN IN THE FLOOR PLAN.

ALL OTHER GLASS PANELS ARE TIGHTLY AND SECURELY FIXED SO THAT IS UNOPENABLE IN OR OUT

DOORS AND WINDOWS SCHEDULE

SCALE 1:50

INFRASTRUCTURE UNIT
FINANCE DEPARTMENT
MALDIVES POLICE SERVICE
MALE' REPUBLIC OF MALDIVES

PROJECT TITLE

HULHUMALE' POLICE STATION
NEIGHBORHOOD - 1

RECOMMENDATION APPROVED BY
ISMAIL NAVEEN
CHIEF SUPERINTENDENT OF POLICE

DESIGN APPROVED BY
AZEEM WAHEED
CHIEF INSPECTOR OF POLICE

APPROVED BY
AHMED MOHAMED
CHIEF SUPERINTENDENT OF POLICE

ARCHITECT / DESIGNER
ISMAIL RAFEEU
POLICE STAFF SERGEANT

STRUCTURAL ENGINEER
RAMEEZ
ADEPT MALDIVES PVT LTD

DRAWN BY
ISMAIL RAFEEU
POLICE STAFF SERGEANT

CHECKED BY
ABDUL WAHID MOHAMED
ADEPT MALDIVES PVT LTD

DATE
15 - 02 - 2015

REVISED DATE

DRAWING NO
A 11

SHEET NO
11/

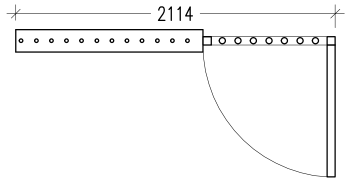

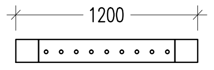

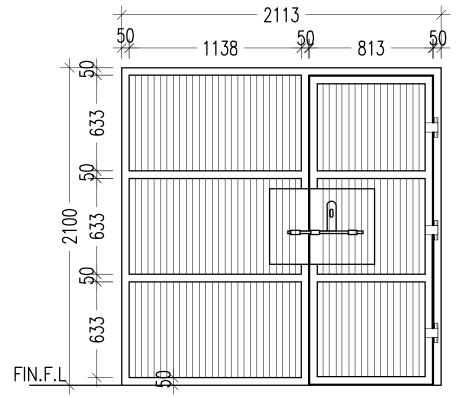
2113
50
1138
50
813
50
50
633
50
633
50
633
2100
50
FIN.F.L

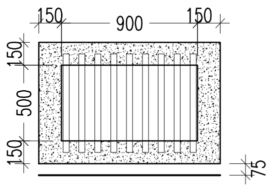
150
900
150
150
500
150
75

DOOR NO.	CD1	AREA	QTY
FRAM	50x50x3mm Thick GI Squared Beams	3.9	–
REMARKS	6mm thick 40mm ø GI Bars @85c/c See Hinge and Locking Details / Gloss Paint Finish		

DOOR NO.	CD2	AREA
FRAM	Concrete	0.45
REMARKS	3mm thick 35mm ø GI Bars @85c/c	

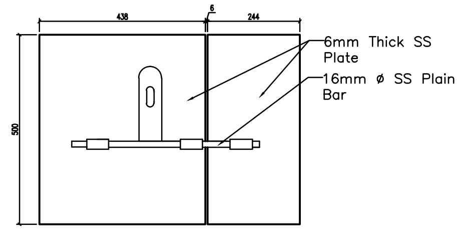
438
6
244
500
6mm Thick SS Plate
16mm ø SS Plain Bar

LOCKING MACHANISM OF 'CD1'
Scale 1:20

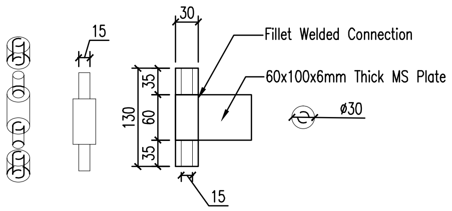
15
30
Fillet Welded Connection
60x100x6mm Thick MS Plate
130
35
60
35
ø30
15

HINGE DETAIL

Scale 1:10

KEY:
G: GLASS
T: TIMBER
FAL: FIXED ALUMINUM LOUVERS

NOTE:

ALL MEASUREMENTS
TO BE CHECKED ON
SITE BEFORE FABRICATION

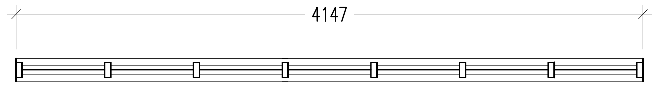

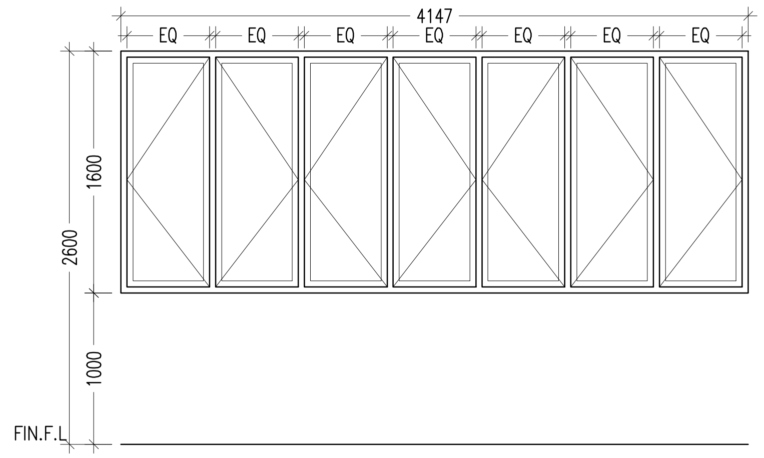
4147
EQ
EQ
EQ
EQ
EQ
EQ
EQ
1600
2600
1000
FIN.F.L

DOOR NO.	W4	AREA	QTY
FRAM	Aluminum frame	8.15	–
REMARKS	–		

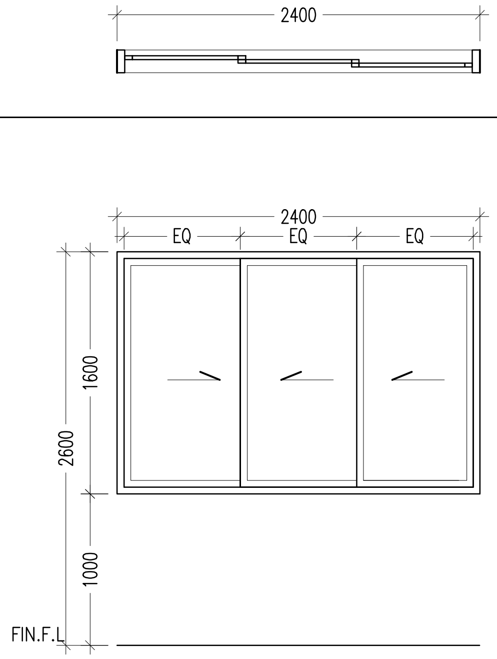
2400
2400
EQ
EQ
EQ
1600
2600
1000
FIN.F.L

DOOR NO.	W5	AREA	QTY
FRAM	Aluminum frame	2.32	–
REMARKS	–		

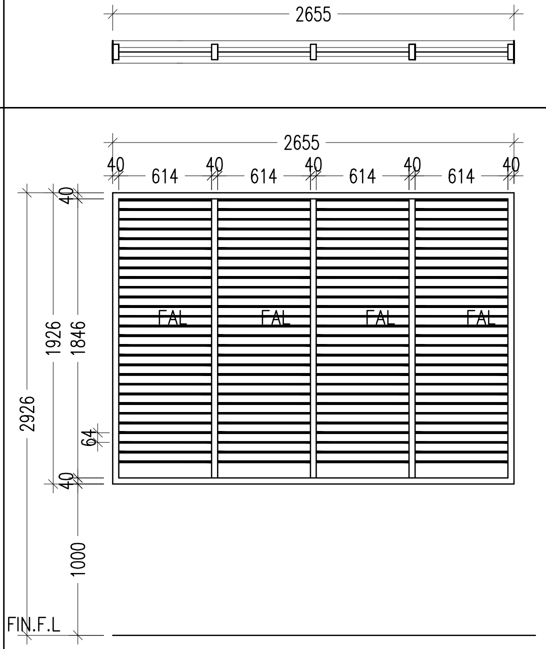
2655
2655
40
614
40
614
40
614
40
614
40
40
1926
1846
2926
64
40
FAL
FAL
FAL
FAL
1000
FIN.F.L

DOOR NO.	W6	AREA	QTY
FRAM	Aluminum frame	3.32	–
REMARKS	–		

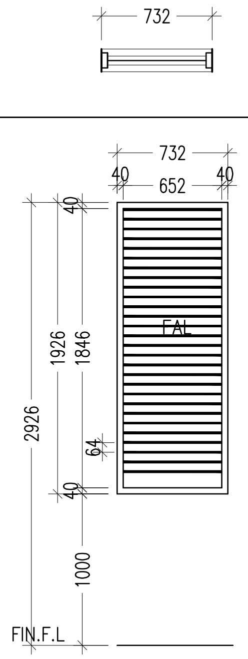
732
732
40
652
40
40
1926
1846
2926
64
40
FAL
1000
FIN.F.L

DOOR NO.	W7	AREA	QTY
FRAM	Aluminum frame	0.88	–
REMARKS	–		

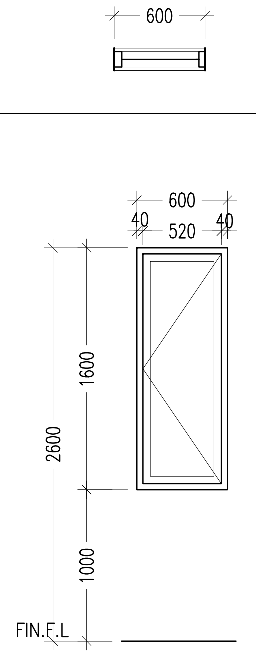
600
600
40
520
40
1600
2600
1000
FIN.F.L

DOOR NO.	W8	AREA	QTY
FRAM	Aluminum frame	0.79	–
REMARKS	–		

DOORS AND WINDOWS SCHEDULE

SCALE 1:50

INFRASTRUCTURE UNIT
FINANCE DEPARTMENT
MALDIVES POLICE SERVICE
MALE' REPUBLIC OF MALDIVES

PROJECT TITLE
HULHUMALE' POLICE STATION NEIGHBORHOOD - 1

RECOMMENDATION APPROVED BY
ISMAIL NAVEEN
CHIEF SUPERINTENDENT OF POLICE

DESIGN APPROVED BY
AZEEM WAHEED
CHIEF INSPECTOR OF POLICE

APPROVED BY
AHMED MOHAMED
CHIEF SUPERINTENDENT OF POLICE

ARCHITECT / DESIGNER
ISMAIL RAFEEU
POLICE STAFF SERGEANT

DRAWN BY
ISMAIL RAFEEU
POLICE STAFF SERGEANT

STRUCTURAL ENGINEER
RAMEEZ
ADEPT MALDIVES PVT LTD

CHECKED BY
ABDUL WAHID MOHAMED
ADEPT MALDIVES PVT LTD

DATE
15 - 02 - 2015

REVISED DATE

DRAWING NO
A 12

SHEET NO
12/

GROUND FLOOR

ROOM NAME/ NUMBER	ROOM AREAS (SQM)	REQUIRED OPENING AREA (SQM)	DESIGNED OPENING AREA (SQM)	SD1	D1	D2	D3	D4	D5	D6	W1	W2	W3	W4	W5	W6	W7	W8	CD2	FG1	FG2	FG3	FG4	FG5	MV
				3.25	3.50	1.89	1.89	1.67	1.89	1.72	1.28	0.00	0.33	5.81	2.33	3.32	0.88	0.79	0.45	1.38	1.04	1.04	1.04	1.04	mechanical vent
GROUND FLOOR																									
VEHICLE PARKING AREA	139.23m^2	13.92m^2	OPEN AREA																						
RECEPTION	81.68m^2	8.16m^2	12.13m^2		1				1						2						2				
STORE-1	12.75m^2	1.28m^2	1.28m^2								1														
STORE-2	7.96m^2	0.80m^2	1.28m^2								1														
PADDED CELL	9.75m^2	0.98m^2	1.76m^2																						mechanical vent
WAITING AREA	17.08m^2	1.71m^2	2.08m^2																				2		
VISITORS ROOM	16.42m^2	1.64m^2	MV																						mechanical vent
INTERVIEW ROOM 1	8.33m^2	0.83m^2	1.38m^2																	1					
INTERVIEW ROOM 2	8.30m^2	0.83m^2	1.38m^2																	1					
INTERVIEW ROOM 3	8.90m^2	0.89m^2	2.08m^2																				2		
CHARGE ROOM-1	24.57m^2	0.25m^2	MV																						mechanical vent
CHARGE ROOM-2	16.31m^2	0.16m^2	MV																						mechanical vent
SERVICE ROOM	4.58m^2	0.46m^2	0.79m^2															1							
FEMALE CELL BLOCK	23.57m^2	2.36m^2	3.93m^2														4		1						
MALE CELL BLOCK (CELL 01 - CELL 04)	50.25m^2	5.03m^2	5.12m^2													1			4						
TOILET-(AT WAITING AREA)	2.85m^2	0.29m^2	0.66m^2										2												
TOILETS-(AT GRID 1/2, AB)	6.12m^2	0.61m^2	0.99m^2										3												
WASH AREA-(AT GRID 1/2, AB)	8.58m^2	0.86m^2	1.38m^2 + MV																	1					mechanical vent

SCHEDULE OF VENTILATION

SCALE 1:100

NOTE:

Area stated here in are only for the respective floor.
Not for the whole windows of FG1, FG2, FG3, FG,4, FG5

INFRASTRUCTURE UNIT
FINANCE DEPARTMENT
MALDIVES POLICE SERVICE
MALE' REPUBLIC OF MALDIVES

PROJECT TITLE
HULHUMALE' POLICE STATION NEIGHBORHOOD - 1

RECOMMENDATION APPROVED BY
ISMAIL NAVEEN
CHIEF SUPERINTENDENT OF POLICE

DESIGN APPROVED BY
AZEEM WAHEED
CHIEF INSPECTOR OF POLICE

APPROVED BY
AHMED MOHAMED
CHIEF SUPERINTENDENT OF POLICE

ARCHITECT / DESIGNER
ISMAIL RAFEEU
POLICE STAFF SERGEANT

DRAWN BY
ISMAIL RAFEEU
POLICE STAFF SERGEANT

STRUCTURAL ENGINEER
RAMEEZ
ADEPT MALDIVES PVT LTD

CHECKED BY
ABDUL WAHID MOHAMED
ADEPT MALDIVES PVT LTD

DATE
15 - 02 - 2015

REVISED DATE

DRAWING NO
A 14

SHEET NO
13/

FIRST FLOOR

ROOM NAME/ NUMBER	ROOM AREAS (SQM)	REQUIRED OPENING AREA (SQM)	DESIGNED OPENING AREA (SQM)	SD1	D1	D2	D3	D4	D5	D6	W1	W2	W3	W4	W5	W6	W7	W8	CD2	FG1	FG2	FG3	FG4	FG5	MV
				3.25	3.50	1.89	1.89	1.67	1.89	1.72	1.28	0.00	0.33	5.81	2.33	3.32	0.88	0.79	0.45	1.38	1.04	1.04	1.04	1.04	mechanical vent
FIRST FLOOR																									
OFFICERS ACCOMMODATION BED ROOM	16.32m²	1.64m²	3.9m²	1							1														
OFFICERS ACCOMMODATION SITTING	12.76m²	1.28m²	1.28m²								1														
OFFICERS ACCOMMODATION TOILET	4.07m²	0.41m²	0.66m²										2												
ACCOMMODATION FOR 20 PAX	80.91m²	8.09m²	9.97m²											1										4	
ARMORY	26.12m²	2.61m²	MV																						
LOCKER / REST ROOM	17.56m²	1.76m²	2.33m²												1										
JUVENILE INTERVIEW ROOM	17.59m²	1.76m²	2.33m²												1										
OPS	26.36m²	2.64m²	5.81m²								1														
FORENSIC - B	25.82m²	2.58m²	2.76m²																	2					
FORENSIC - A	41.25m²	4.13m²	2.08m² + MV																		2				mechanical vent
FORENSIC RECEPTION	20.75m²	2.08m²	2.08m²																			2			
INVESTIGATION OFFICERS	65.59m²	6.56m²	7.03m²																			2	4		
WASH AREA-(AT ACCOMMODATION TOILETS AREA)	18.54m²	1.85m²	2.33m²												1										
TOILETS-(AT ACCOMMODATION TOILETS & SHOWER AREA)	10.2m²	1.02m²	1.98m²										6												
SERVICE ROOM	3.94m²	0.39m²	0.79m²													1									
TOILETS-(AT GRID 1/2, AB)	2.38m²	0.24m²	0.99m²										3												
WASH AREA-(AT GRID 1/2, AB)	8.58m²	0.86m²	1.38m² + MV																	1					mechanical vent
WALKWAY	34.67m²	3.47m²	7.22m²								2				2										

NOTE:
Area stated here in are only for the respective floor.
Not for the whole windows of FG1, FG2, FG3, FG,4, FG5

SCHEDULE OF VENTILATION

SCALE 1:100

INFRASTRUCTURE UNIT
FINANCE DEPARTMENT
MALDIVES POLICE SERVICE
MALE' REPUBLIC OF MALDIVES

PROJECT TITLE
HULHUMALE' POLICE STATION NEIGHBORHOOD - 1

RECOMMENDATION APPROVED BY
ISMAIL NAVEEN
CHIEF SUPERINTENDENT OF POLICE

DESIGN APPROVED BY
AZEEM WAHEED
CHIEF INSPECTOR OF POLICE

APPROVED BY
AHMED MOHAMED
CHIEF SUPERINTENDENT OF POLICE

ARCHITECT / DESIGNER
ISMAIL RAFEEU
POLICE STAFF SERGEANT

DRAWN BY
ISMAIL RAFEEU
POLICE STAFF SERGEANT

STRUCTURAL ENGINEER
RAMEEZ
ADEPT MALDIVES PVT LTD

CHECKED BY
ABDUL WAHID MOHAMED
ADEPT MALDIVES PVT LTD

DATE
15 - 02 - 2015

REVISED DATE

DRAWING NO
A 15

SHEET NO
14/

SECOND FLOOR

ROOM NAME/ NUMBER	ROOM AREAS (SQM)	REQUIRED OPENING AREA (SQM)	DESIGNED OPENING AREA (SQM)	SD1	D1	D2	D3	D4	D5	D6	W1	W2	W3	W4	W5	W6	W7	W8	CD2	FG1	FG2	FG3	FG4	FG5	MV
				3.25	3.50	1.89	1.89	1.67	1.89	1.72	1.28	0.00	0.33	5.81	2.33	3.32	0.88	0.79	0.45	1.38	1.04	1.04	1.04	1.04	mechanical vent
SECOND FLOOR																									
OFFICERS ACCOMMODATION BED ROOM	16.32m²	1.63m²	3.9m²	1							1														
OFFICERS ACCOMMODATION SITTING	12.76m²	1.28m²	1.28m²								1														
OFFICERS ACCOMMODATION TOILET	4.07m²	0.41m²	0.66m²										2												
ACCOMMODATION FOR 20 PAX	80.91m²	8.09m²	9.97m²											1										4	
WASH AREA-(AT ACCOMMODATION TOILETS AREA)	18.54m2	1.854m2	2.33m²												1										
TOILETS-(AT ACCOMMODATION TOILETS & SHOWER AREA)	1.68m2	0.168m2	1.98m²										6												
SERVICE ROOM	3.94m²	0.39m²	0.79m²															1							
TOILETS-(AT GRID 1/2, AB)	2.38m²	0.24m²	0.99m²										3												
WASH AREA-(AT GRID 1/2, AB)	8.58m²	0.86m²	1.38m² + MV																	1					mechanical vent
PRAYER ROOM	34.16m²	3.42m²	2.76m² + MV																	2					mechanical vent
CLASS ROOM	45.58m²	4.56m²	4.16m² + MV																		2	2			mechanical vent
COMMANDER ROOM	20.73m²	2.07m²	2.08m²																			2			
ADMIN	44.11m²	4.41m²	4.95m²															1					4		
INCHARGE ROOM	13.37m²	1.34m²	2.33m²												1										
CONFERENCE ROOM	44.33m²	4.43m²	4.89m²										2		1										
STORE	17.59m²	1.76m²	2.33m²												1										
WALK WAY	43.58m²	4.36m²	7.22m²								2				2										

SCHEDULE OF VENTILATION

SCALE 1:100

NOTE:
Area stated here in are only for the respective floor.
Not for the whole windows of FG1, FG2, FG3, FG,4, FG5

INFRASTRUCTURE UNIT
FINANCE DEPARTMENT
MALDIVES POLICE SERVICE
MALE' REPUBLIC OF MALDIVES

PROJECT TITLE
HULHUMALE' POLICE STATION
NEIGHBORHOOD - 1

RECOMMENDATION APPROVED BY
ISMAIL NAVEEN
CHIEF SUPERINTENDENT OF POLICE

DESIGN APPROVED BY
AZEEM WAHEED
CHIEF INSPECTOR OF POLICE

APPROVED BY
AHMED MOHAMED
CHIEF SUPERINTENDENT OF POLICE

ARCHITECT / DESIGNER
ISMAIL RAFEEU
POLICE STAFF SERGEANT

DRAWN BY
ISMAIL RAFEEU
POLICE STAFF SERGEANT

STRUCTURAL ENGINEER
RAMEEZ
ADEPT MALDIVES PVT LTD

CHECKED BY
ABDUL WAHID MOHAMED
ADEPT MALDIVES PVT LTD

DATE
15 - 02 - 2015

REVISED DATE

DRAWING NO
A 15

SHEET NO
15/

TERRACE FLOOR

ROOM NAME/ NUMBER	ROOM AREAS (SQM)	REQUIRED OPENING AREA (SQM)	DESIGNED OPENING AREA (SQM)	SD1	D1	D2	D3	D4	D5	D6	W1	W2	W3	W4	W5	W6	W7	W8	CD2	FG1	FG2	FG3	FG4	FG5	MV
				3.25	3.50	1.89	1.89	1.67	1.89	1.72	1.28	0.00	0.33	5.81	2.33	3.32	0.88	0.79	0.45	1.38	1.04	1.04	1.04	1.04	mechanical vent
TERRACE FLOOR																									
SERVICE ROOM	3.94m²	0.39m²	0.79m²															1							
TOILETS-(AT GRID 1/2, AB)	2.38m²	0.24m²	0.99m²										3												
WASH AREA-(AT GRID 1/2, AB)	8.58m²	0.86m²	1.38m² + MV																	1					mechanical vent
RECREATION ROOM	78.15m²	7.82m²	10.65m²											1						2	2				
MESS ROOM	113.23m²	11.32m²	16.96m²			1								1	2									4	
KITCHEN	23.92m²	2.39m²	2.56m²								2														
STORE	8.53m²	0.85m²	1.28m²								1														
WALK WAY	6.84m²	0.68m²	0.79m²															1							

NOTE:
Area stated here in are only for the respective floor.
Not for the whole windows of FG1, FG2, FG3, FG,4, FG5

SCHEDULE OF VENTILATION

SCALE 1:100

INFRASTRUCTURE UNIT
FINANCE DEPARTMENT
MALDIVES POLICE SERVICE
MALE' REPUBLIC OF MALDIVES

PROJECT TITLE
HULHUMALE' POLICE STATION NEIGHBORHOOD - 1

RECOMMENDATION APPROVED BY
ISMAIL NAVEEN
CHIEF SUPERINTENDENT OF POLICE

DESIGN APPROVED BY
AZEEM WAHEED
CHIEF INSPECTOR OF POLICE

APPROVED BY
AHMED MOHAMED
CHIEF SUPERINTENDENT OF POLICE

ARCHITECT / DESIGNER
ISMAIL RAFEEU
POLICE STAFF SERGEANT

DRAWN BY
ISMAIL RAFEEU
POLICE STAFF SERGEANT

STRUCTURAL ENGINEER
RAMEEZ
ADEPT MALDIVES PVT LTD

CHECKED BY
ABDUL WAHID MOHAMED
ADEPT MALDIVES PVT LTD

DATE
15 - 02 - 2015

REVISED DATE

DRAWING NO
A 16

SHEET NO
16/

DOORS AND WINDOWS SCHEDULE

SCALE 1:50

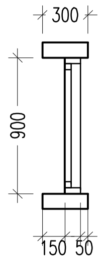
300
900
150 50

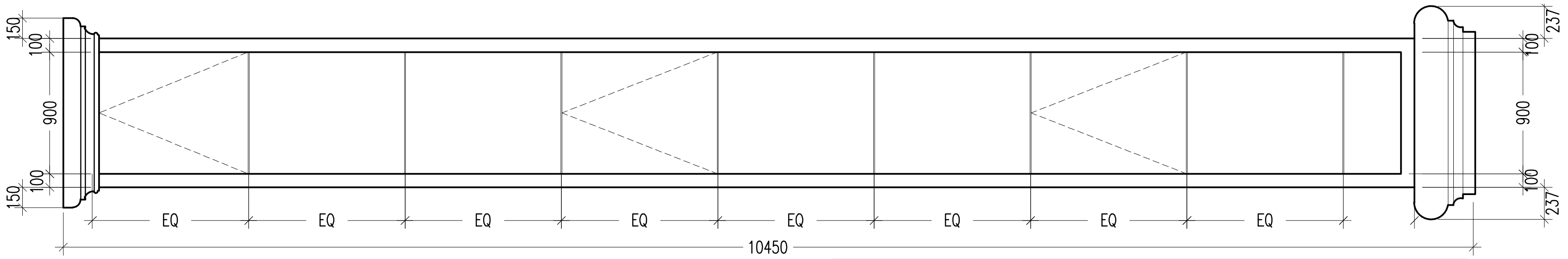
150
100
900
100
150
EQ
EQ
EQ
EQ
EQ
EQ
EQ
EQ
10450
237
100
900
100
237

DOOR NO.	FG 5	AREA	QTY	REMARKS
FRAM	Aluminium frame	1.04	-	6mm thk blue reflective glass

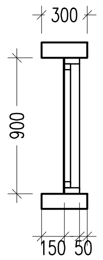
300
900
150 50

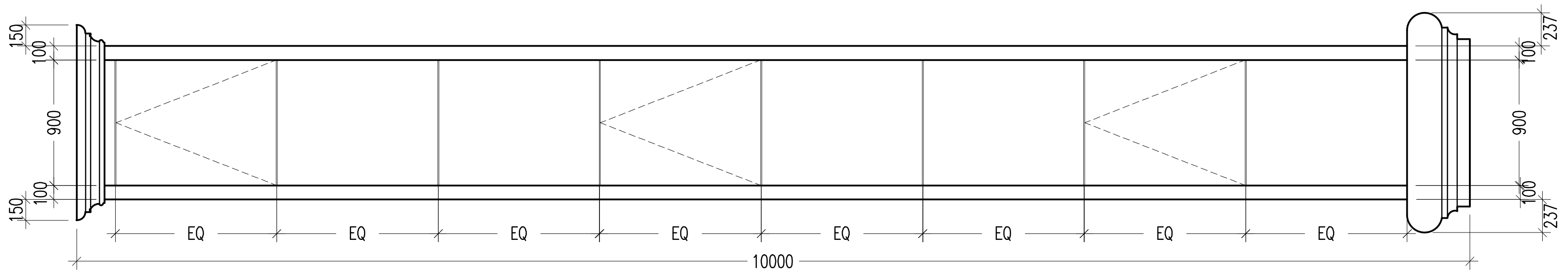
150
100
900
100
150
EQ
EQ
EQ
EQ
EQ
EQ
EQ
EQ
10000
237
100
900
100
237

DOOR NO.	FG 4	AREA	QTY	REMARKS
FRAM	Aluminium frame	1.04	-	6mm thk blue reflective glass

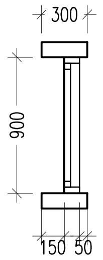
300
900
150 50

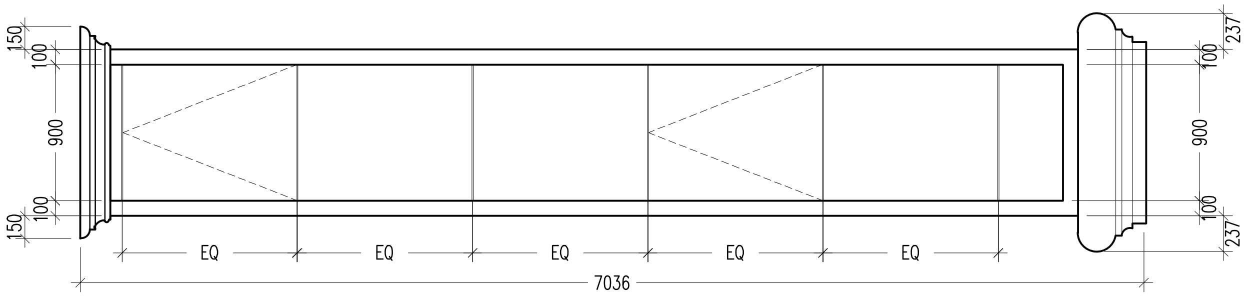
150
100
900
100
150
EQ
EQ
EQ
EQ
EQ
7036
237
100
900
100
237

DOOR NO.	FG 3	AREA	QTY	REMARKS
FRAM	Aluminium frame	1.04	-	6mm thk blue reflective glass

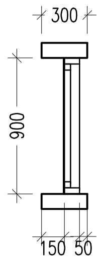
300
900
150 50

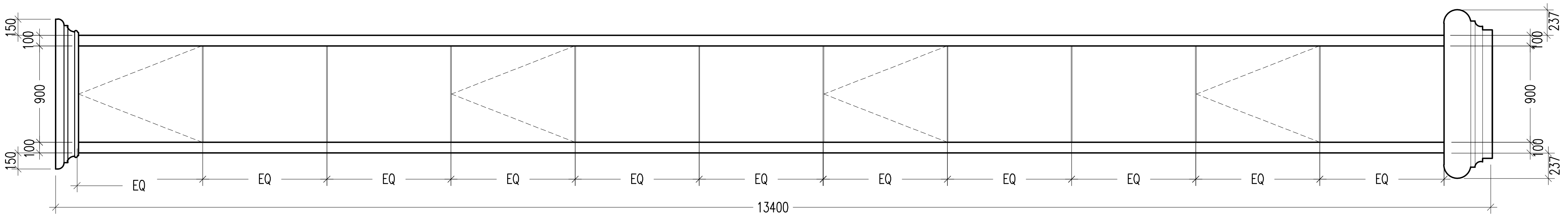
150
100
900
100
150
EQ
EQ
EQ
EQ
EQ
EQ
EQ
EQ
EQ
EQ
EQ
13400
237
100
900
100
237

DOOR NO.	FG 2	AREA	QTY	REMARKS
FRAM	Aluminium frame	1.04	-	6mm thk blue reflective glass

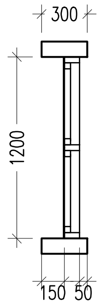
300
1200
150 50

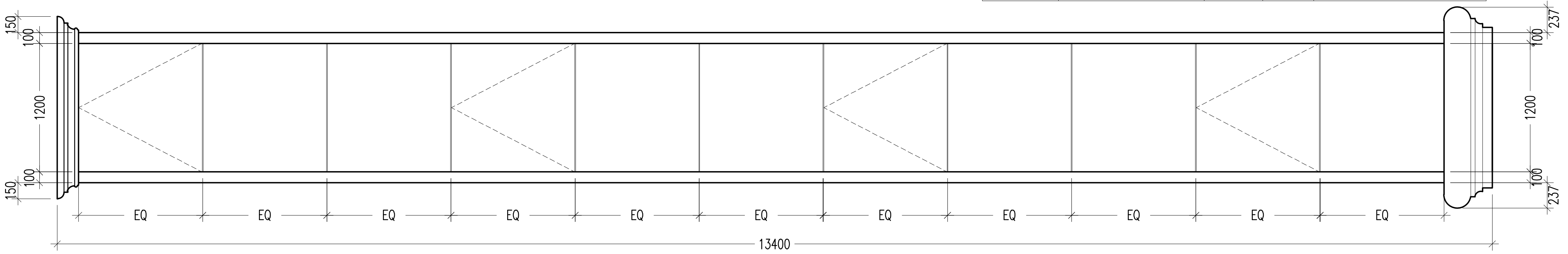
150
100
1200
100
150
EQ
EQ
EQ
EQ
EQ
EQ
EQ
EQ
EQ
EQ
EQ
13400
237
100
1200
100
237

DOOR NO.	FG 1	AREA	QTY	REMARKS
FRAM	Aluminium frame	1.38	-	6mm thk blue reflective glass

INFRASTRUCTURE UNIT
FINANCE DEPARTMENT
MALDIVES POLICE SERVICE
MALE' REPUBLIC OF MALDIVES

PROJECT TITLE
HULHUMALE' POLICE STATION NEIGHBORHOOD - 1

RECOMMENDATION APPROVED BY
ISMAIL NAVEEN
CHIEF SUPERINTENDENT OF POLICE

DESIGN APPROVED BY
AZEEM WAHEED
CHIEF INSPECTOR OF POLICE

APPROVED BY
AHMED MOHAMED
CHIEF SUPERINTENDENT OF POLICE

ARCHITECT / DESIGNER
ISMAIL RAFEEU
POLICE STAFF SERGEANT

DRAWN BY
ISMAIL RAFEEU
POLICE STAFF SERGEANT

STRUCTURAL ENGINEER
RAMEEZ
ADEPT MALDIVES PVT LTD

CHECKED BY
ABDUL WAHID MOHAMED
ADEPT MALDIVES PVT LTD

DATE
15 - 02 - 2015

REVISED DATE

DRAWING NO
A 13

SHEET NO
13/

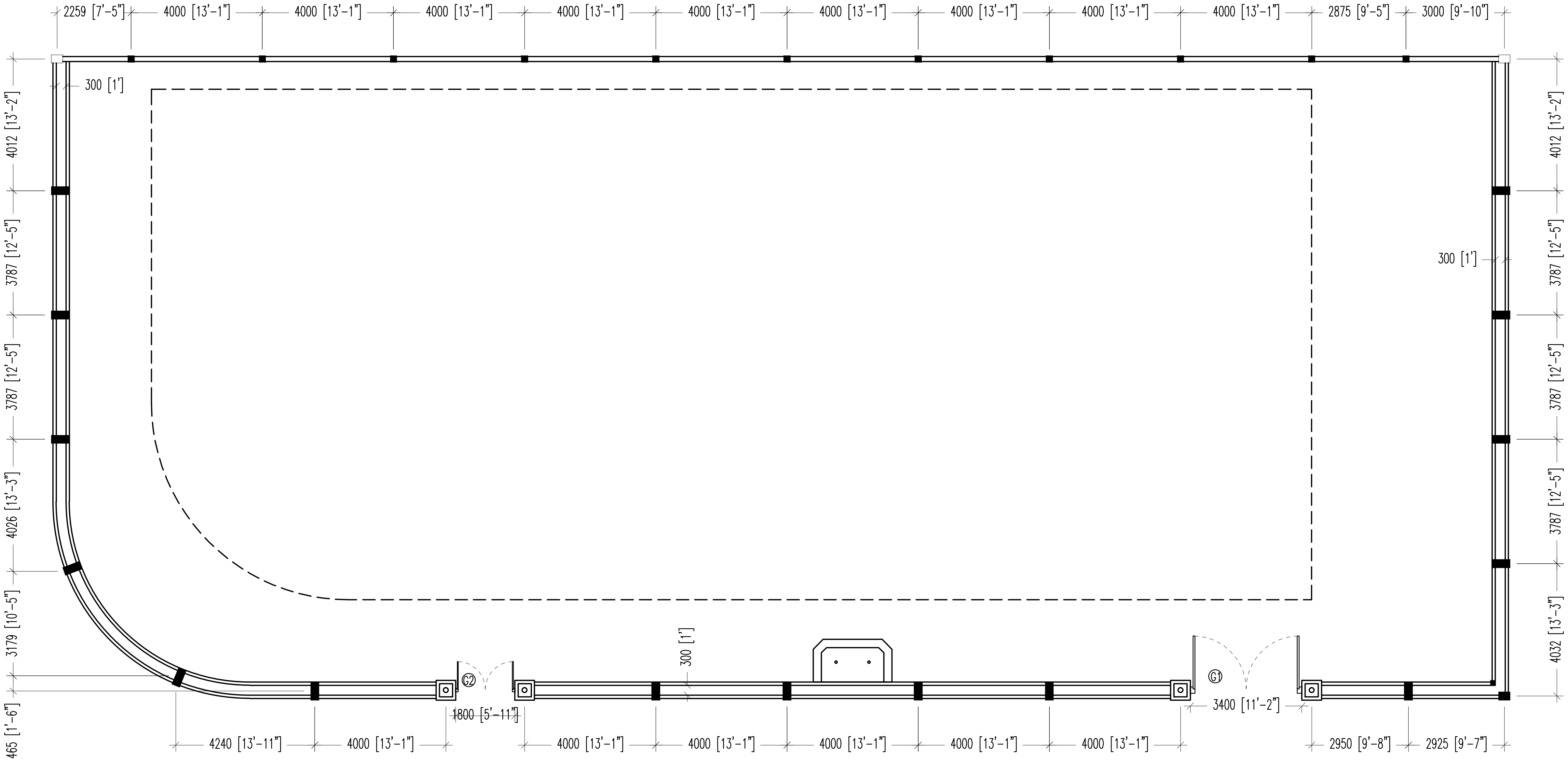
2259 [7'-5"]
4000 [13'-1"]
4000 [13'-1"]
4000 [13'-1"]
4000 [13'-1"]
4000 [13'-1"]
4000 [13'-1"]
4000 [13'-1"]
4000 [13'-1"]
4000 [13'-1"]
2875 [9'-5"]
3000 [9'-10"]
300 [1']
4012 [13'-2"]
3787 [12'-5"]
3787 [12'-5"]
4026 [13'-3"]
3179 [10'-5"]
465 [1'-6"]
300 [1']
4012 [13'-2"]
3787 [12'-5"]
3787 [12'-5"]
3787 [12'-5"]
4032 [13'-3"]
300 [1']
G2
G1
1800 [5'-11"]
3400 [11'-2"]
4240 [13'-11"]
4000 [13'-1"]
4000 [13'-1"]
4000 [13'-1"]
4000 [13'-1"]
4000 [13'-1"]
4000 [13'-1"]
2950 [9'-8"]
2925 [9'-7"]

BOUNDARY WALL PLAN

SCALE 1:150

INFRASTRUCTURE UNIT **FINANCE DEPARTMENT** **MALDIVES POLICE SERVICE** **MALE' REPUBLIC OF MALDIVES**	**PROJECT TITLE** **HULHUMALE' POLICE STATION** **NEIGHBORHOOD - 1**	RECOMMENDATION APPROVED BY **ISMAIL NAVEEN** CHIEF SUPERINTENDENT OF POLICE	DESIGN APPROVED BY **AZEEM WAHEED** CHIEF INSPECTOR OF POLICE	APPROVED BY **AHMED MOHAMED** CHIEF SUPERINTENDENT OF POLICE	ARCHITECT / DESIGNER **ISMAIL RAFEEU** POLICE STAFF SERGEANT	DRAWN BY **ISMAIL RAFEEU** POLICE STAFF SERGEANT	DATE **15 - 02 - 2015**	DRAWING NO
					STRUCTURAL ENGINEER **RAMEEZ** ADEPT MALDIVES PVT LTD	CHECKED BY **ABDUL WAHID MOHAMED** ADEPT MALDIVES PVT LTD	REVISED DATE	SHEET NO

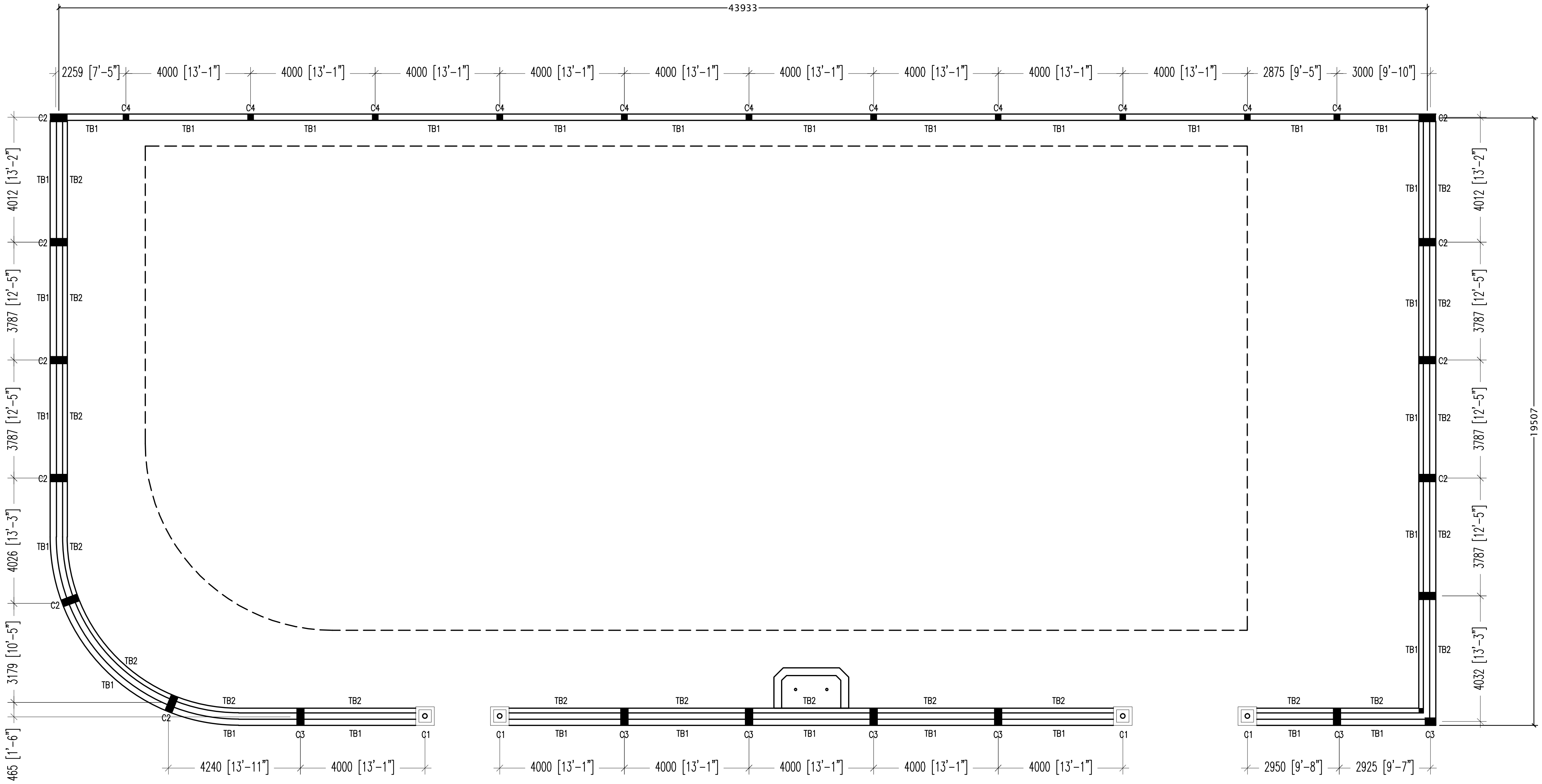
43933
2259 [7'-5"]
4000 [13'-1"]
2875 [9'-5"]
3000 [9'-10"]
C2
C4
TB1
TB2
C1
C3
4012 [13'-2"]
3787 [12'-5"]
4026 [13'-3"]
3179 [10'-5"]
465 [1'-6"]
4032 [13'-3"]
19507
4240 [13'-11"]
2950 [9'-8"]
2925 [9'-7"]

BOUNDARY WALL FOUNDATION PLAN

SCALE 1:150

INFRASTRUCTURE UNIT **FINANCE DEPARTMENT** **MALDIVES POLICE SERVICE** **MALE' REPUBLIC OF MALDIVES**	**PROJECT TITLE** **HULHUMALE' POLICE STATION NEIGHBORHOOD - 1**	RECOMMENDATION APPROVED BY **ISMAIL NAVEEN** CHIEF SUPERINTENDENT OF POLICE	DESIGN APPROVED BY **AZEEM WAHEED** CHIEF INSPECTOR OF POLICE	APPROVED BY **AHMED MOHAMED** CHIEF SUPERINTENDENT OF POLICE	ARCHITECT / DESIGNER **ISMAIL RAFEEU** POLICE STAFF SERGEANT	DRAWN BY **ISMAIL RAFEEU** POLICE STAFF SERGEANT	DATE **15 - 02 - 2015**	DRAWING NO
					STRUCTURAL ENGINEER **RAMEEZ** ADEPT MALDIVES PVT LTD	CHECKED BY **ABDUL WAHID MOHAMED** ADEPT MALDIVES PVT LTD	REVISED DATE	SHEET NO

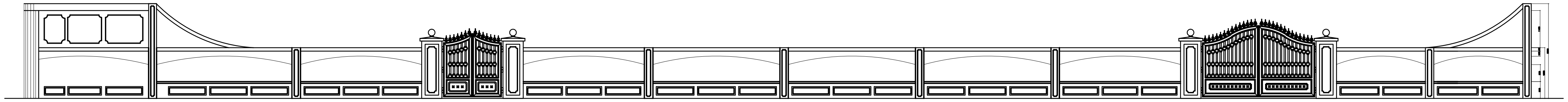

BOUNDARY WALL FRONT ELEVATION

SCALE NTS

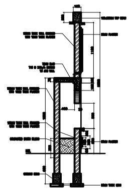

TYPICAL BOUNDARY WALL SECTION

INFRASTRUCTURE UNIT **FINANCE DEPARTMENT** MALDIVES POLICE SERVICE MALE' REPUBLIC OF MALDIVES	**PROJECT TITLE** **HULHUMALE' POLICE STATION NEIGHBORHOOD - 1**	RECOMMENDATION APPROVED BY **ISMAIL NAVEEN** CHIEF SUPERINTENDENT OF POLICE	DESIGN APPROVED BY **AZEEM WAHEED** CHIEF INSPECTOR OF POLICE	APPROVED BY **AHMED MOHAMED** CHIEF SUPERINTENDENT OF POLICE	ARCHITECT / DESIGNER **ISMAIL RAFEEU** POLICE STAFF SERGEANT	DRAWN BY **ISMAIL RAFEEU** POLICE STAFF SERGEANT	DATE **15 - 02 - 2015**	DRAWING NO
					STRUCTURAL ENGINEER **RAMEEZ** ADEPT MALDIVES PVT LTD	CHECKED BY **ABDUL WAHID MOHAMED** ADEPT MALDIVES PVT LTD	REVISED DATE	SHEET NO

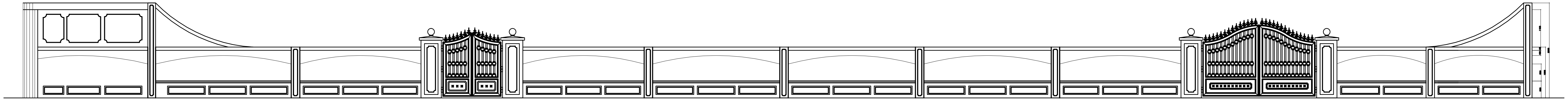

BOUNDARY WALL FRONT ELEVATION

SCALE NTS

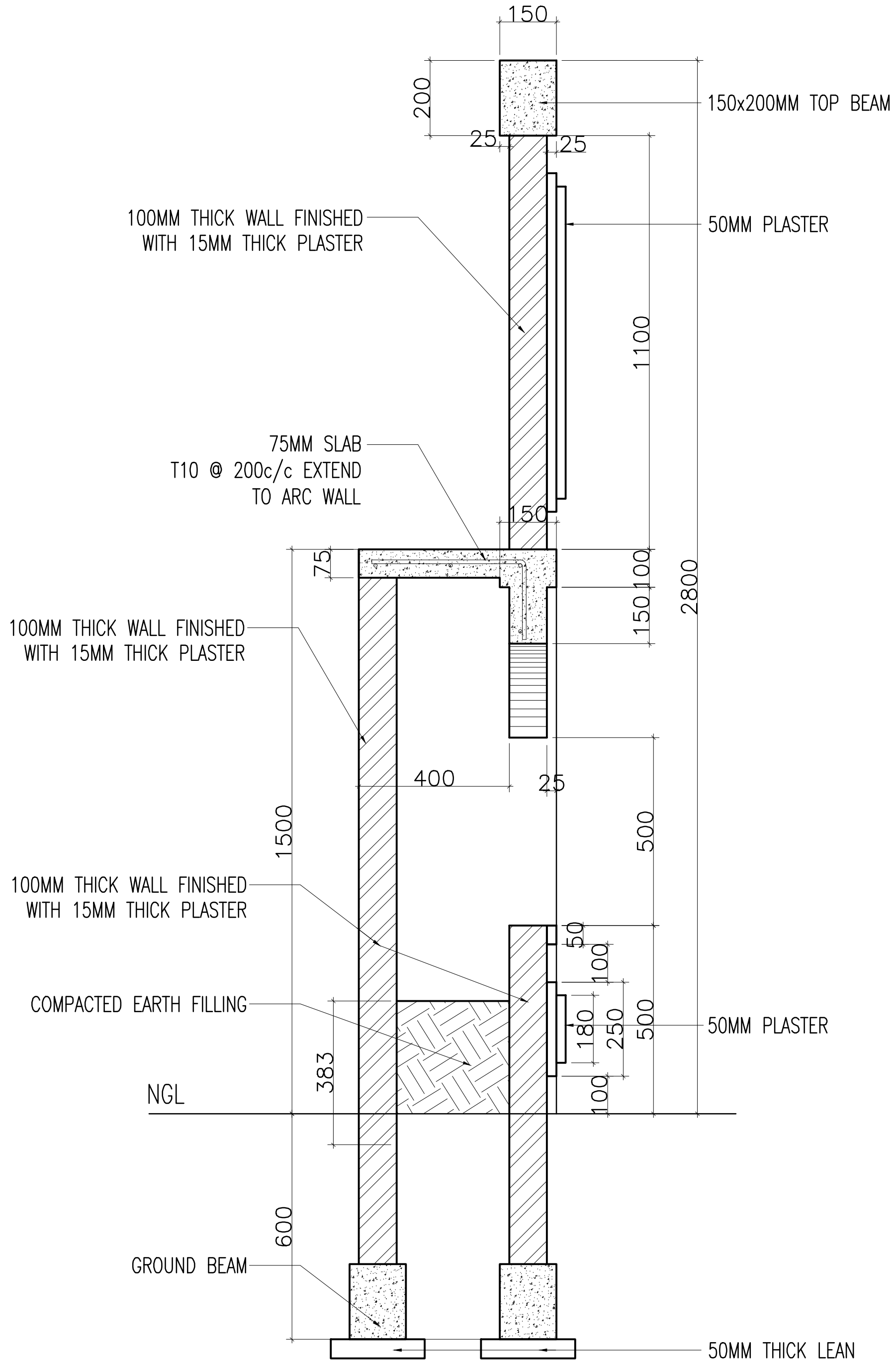
150
200
25
25
150x200MM TOP BEAM
100MM THICK WALL FINISHED WITH 15MM THICK PLASTER
50MM PLASTER
1100
75MM SLAB T10 @ 200c/c EXTEND TO ARC WALL
150
75
150
100
2800
100MM THICK WALL FINISHED WITH 15MM THICK PLASTER
400
25
1500
500
100MM THICK WALL FINISHED WITH 15MM THICK PLASTER
50
100
COMPACTED EARTH FILLING
180
250
500
50MM PLASTER
383
NGL
100
600
GROUND BEAM
50MM THICK LEAN

TYPICAL BOUNDARY WALL SECTION

Scale 1:20

INFRASTRUCTURE UNIT **FINANCE DEPARTMENT** **MALDIVES POLICE SERVICE** **MALE' REPUBLIC OF MALDIVES**	**PROJECT TITLE** **HULHUMALE' POLICE STATION NEIGHBORHOOD - 1**	RECOMMENDATION APPROVED BY **ISMAIL NAVEEN** CHIEF SUPERINTENDENT OF POLICE	DESIGN APPROVED BY **AZEEM WAHEED** CHIEF INSPECTOR OF POLICE	APPROVED BY **AHMED MOHAMED** CHIEF SUPERINTENDENT OF POLICE	ARCHITECT / DESIGNER **ISMAIL RAFEEU** POLICE STAFF SERGEANT STRUCTURAL ENGINEER **RAMEEZ** ADEPT MALDIVES PVT LTD	DRAWN BY **ISMAIL RAFEEU** POLICE STAFF SERGEANT CHECKED BY **ABDUL WAHID MOHAMED** ADEPT MALDIVES PVT LTD	DATE **15 - 02 - 2015** REVISED DATE	DRAWING NO **A 12** SHEET NO **12/**

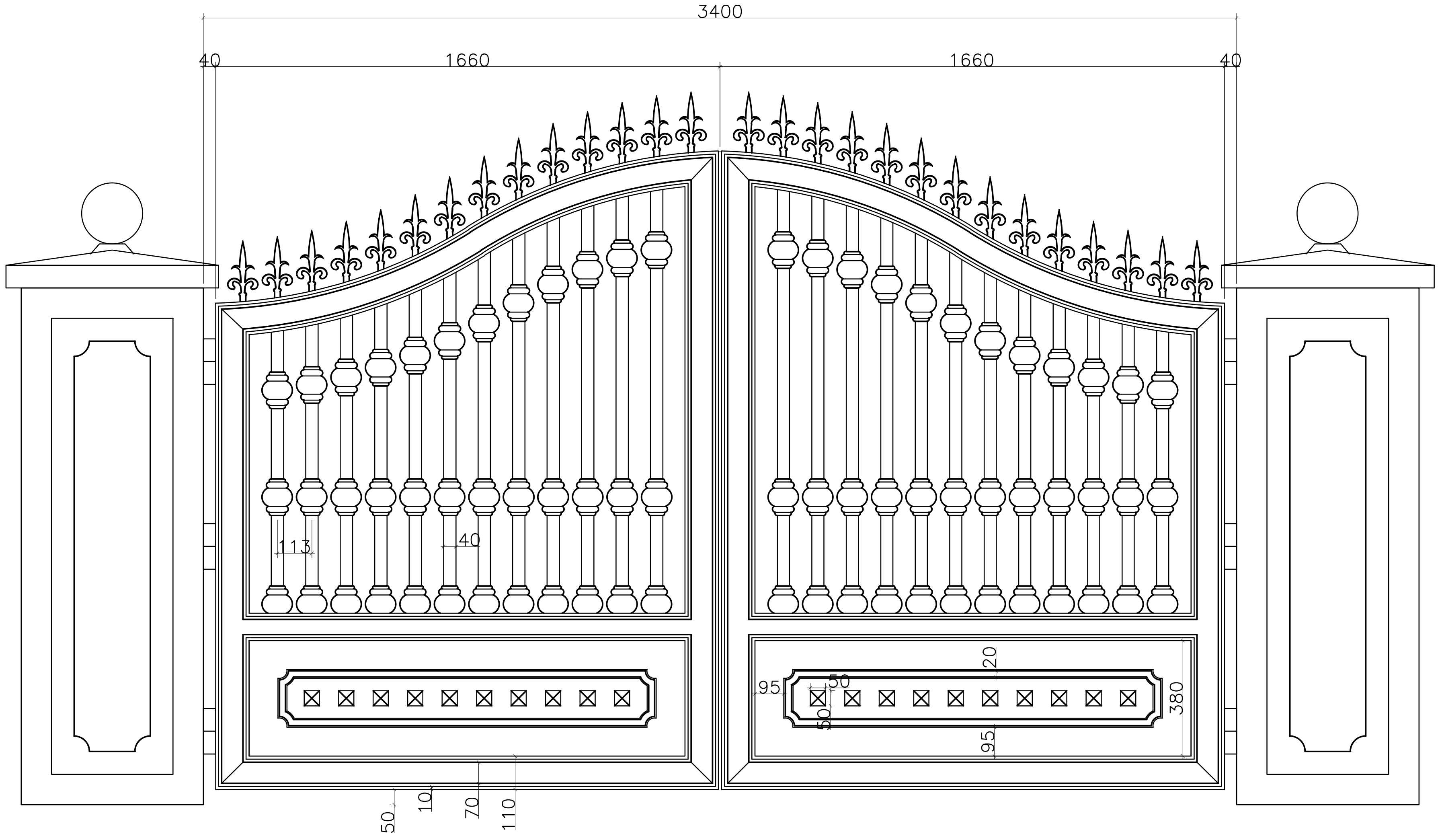

GATE 1 (G1) DETAILS

Scale 1:20

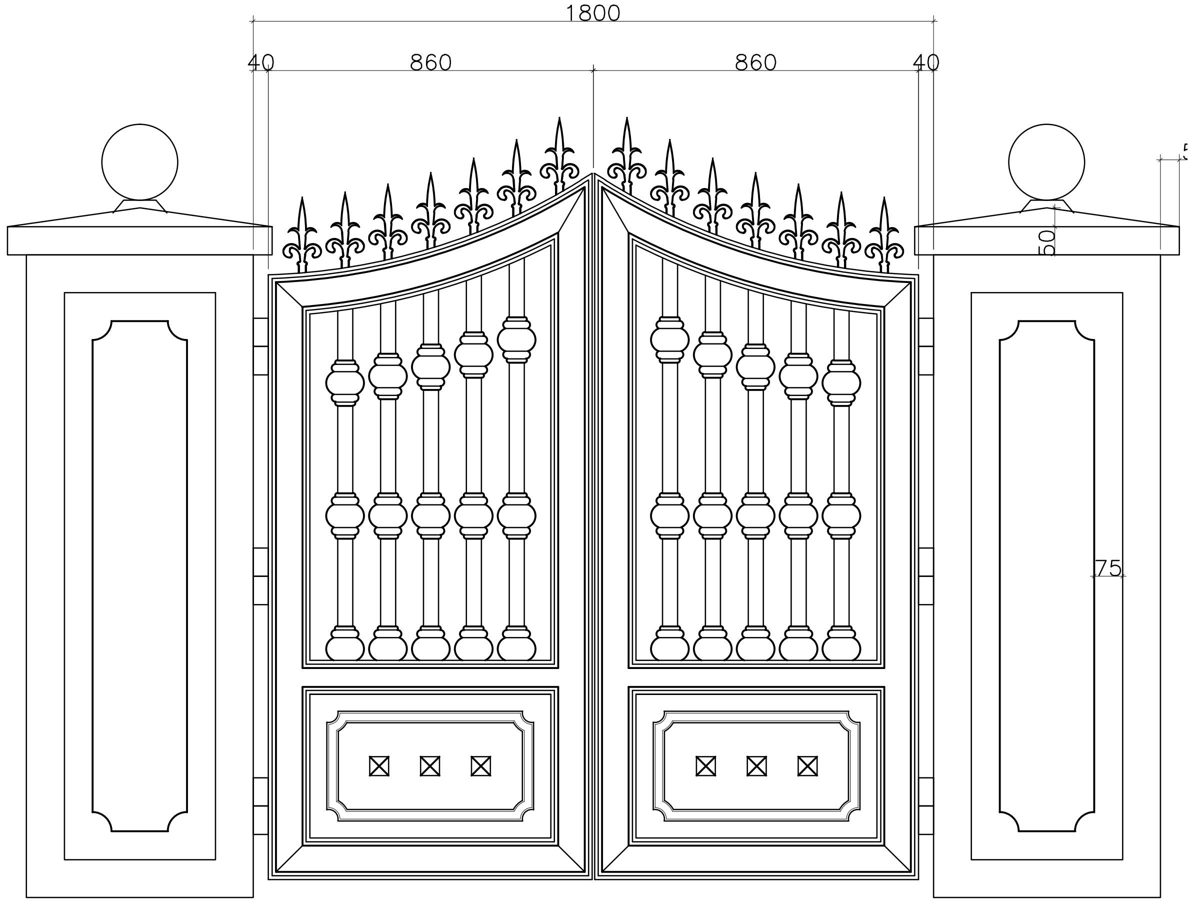

GATE 2 (G2) DETAILS

Scale 1:20

GATE DETAILS

Scale 1:20

INFRASTRUCTURE UNIT
FINANCE DEPARTMENT
MALDIVES POLICE SERVICE
MALE' REPUBLIC OF MALDIVES

PROJECT TITLE
HULHUMALE' POLICE STATION
NEIGHBORHOOD - 1

RECOMMENDATION APPROVED BY
ISMAIL NAVEEN
CHIEF SUPERINTENDENT OF POLICE

DESIGN APPROVED BY
AZEEM WAHEED
CHIEF INSPECTOR OF POLICE

APPROVED BY
AHMED MOHAMED
CHIEF SUPERINTENDENT OF POLICE

ARCHITECT / DESIGNER
ISMAIL RAFEEU
POLICE STAFF SERGEANT

STRUCTURAL ENGINEER
RAMEEZ
ADEPT MALDIVES PVT LTD

DRAWN BY
ISMAIL RAFEEU
POLICE STAFF SERGEANT

CHECKED BY
ABDUL WAHID MOHAMED
ADEPT MALDIVES PVT LTD

DATE
15 - 02 - 2015

REVISED DATE

DRAWING NO
S 08

SHEET NO
24/

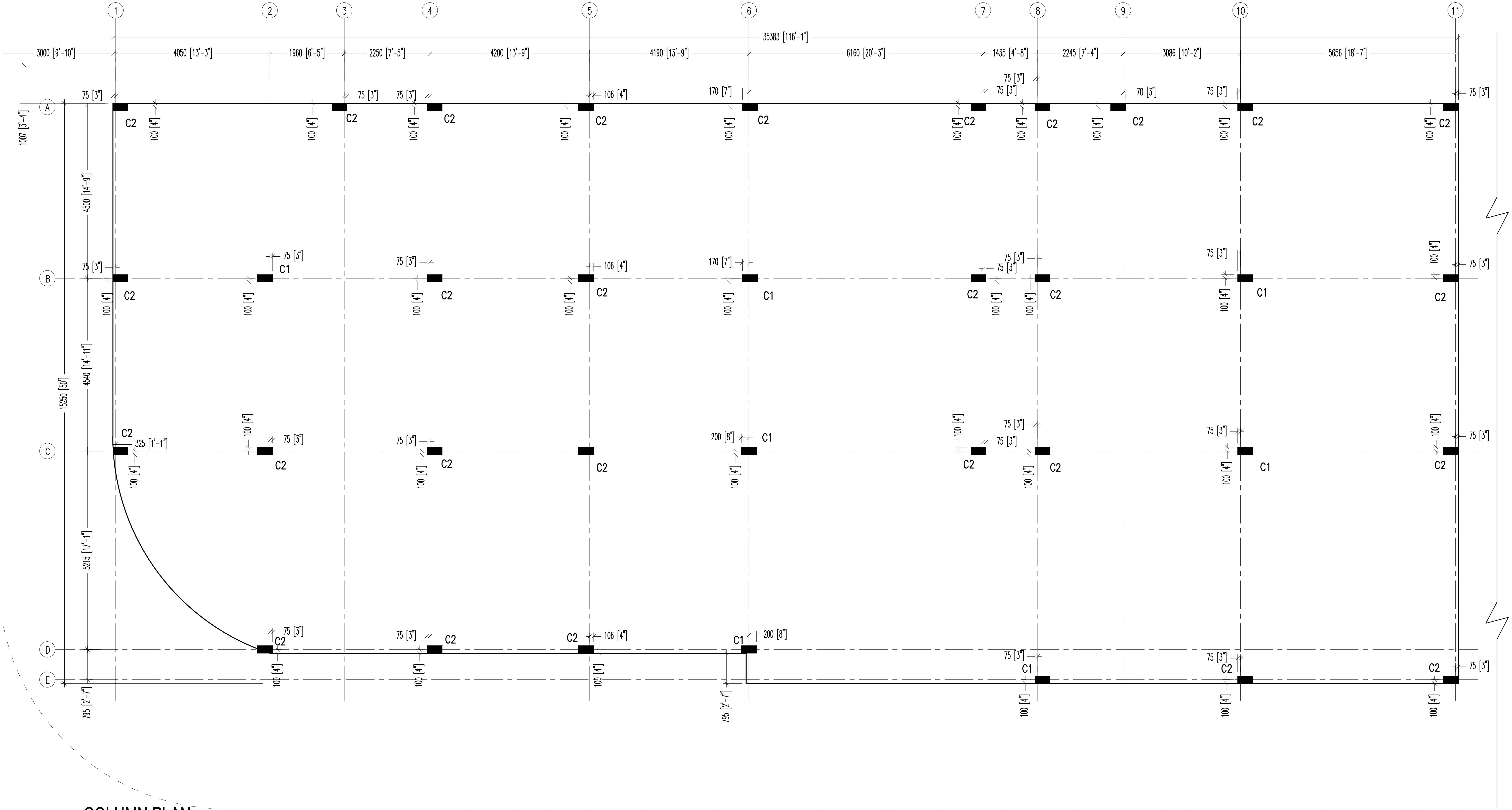
1
2
3
4
5
6
7
8
9
10
11
A
B
C
D
E
35383 [116'-1"]
3000 [9'-10"]
4050 [13'-3"]
1960 [6'-5"]
2250 [7'-5"]
4200 [13'-9"]
4190 [13'-9"]
6160 [20'-3"]
1435 [4'-8"]
2245 [7'-4"]
3086 [10'-2"]
5656 [18'-7"]
1007 [3'-4"]
4500 [14'-9"]
4540 [14'-11"]
5215 [17'-1"]
15250 [50']
795 [2'-7"]
75 [3"]
106 [4"]
170 [7"]
70 [3"]
200 [8"]
325 [1'-1"]
100 [4"]
C1
C2

COLUMN PLAN

SCALE 1:100

INFRASTRUCTURE UNIT
FINANCE DEPARTMENT
MALDIVES POLICE SERVICE
MALE' REPUBLIC OF MALDIVES

PROJECT TITLE **HULHUMALE' POLICE STATION NEIGHBORHOOD - 1**	RECOMMENDATION APPROVED BY ISMAIL NAVEEN CHIEF SUPERINTENDENT OF POLICE	DESIGN APPROVED BY AZEEM WAHEED CHIEF INSPECTOR OF POLICE	APPROVED BY AHMED MOHAMED CHIEF SUPERINTENDENT OF POLICE	ARCHITECT / DESIGNER ISMAIL RAFEEU POLICE STAFF SERGEANT	DRAWN BY ISMAIL RAFEEU POLICE STAFF SERGEANT	DATE 15 - 02 - 2015	DRAWING NO S 01
				STRUCTURAL ENGINEER RAMEEZ ADEPT MALDIVES PVT LTD	CHECKED BY ABDUL WAHID MOHAMED ADEPT MALDIVES PVT LTD	REVISED DATE	SHEET NO 17/

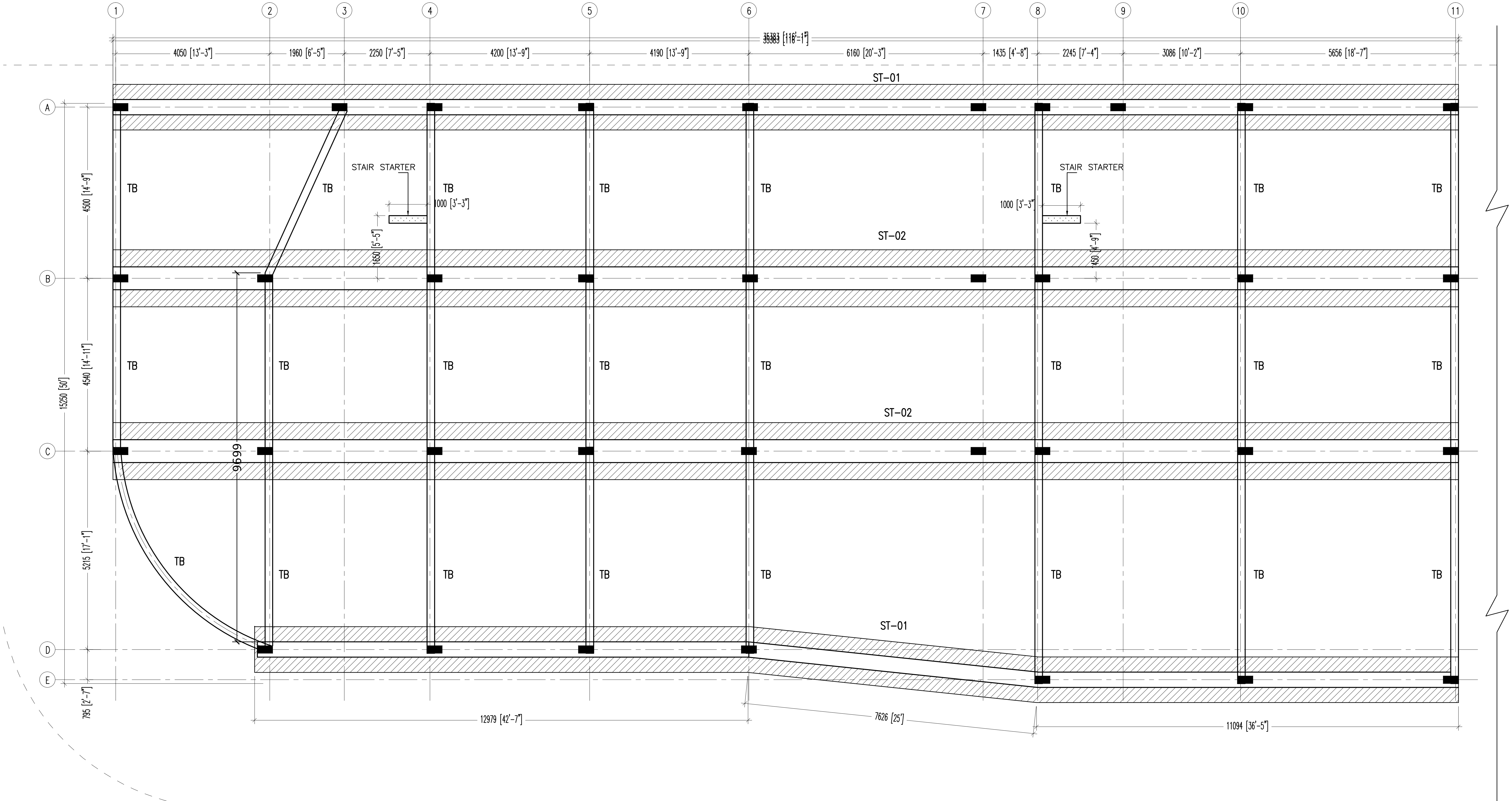
1
2
3
4
5
6
7
8
9
10
11
35383 [116'-1"]
4050 [13'-3"]
1960 [6'-5"]
2250 [7'-5"]
4200 [13'-9"]
4190 [13'-9"]
6160 [20'-3"]
1435 [4'-8"]
2245 [7'-4"]
3086 [10'-2"]
5656 [18'-7"]
A
B
C
D
E
ST-01
ST-02
ST-02
ST-01
STAIR STARTER
STAIR STARTER
1000 [3'-3"]
1000 [3'-3"]
1650 [5'-5"]
450 [4'-9"]
TB
4500 [14'-9"]
4540 [14'-11"]
5215 [17'-1"]
15250 [50']
795 [2'-7"]
9699
12979 [42'-7"]
7626 [25']
11094 [36'-5"]

FOUNDATION PLAN

SCALE 1:100

INFRASTRUCTURE UNIT
FINANCE DEPARTMENT
MALDIVES POLICE SERVICE
MALE' REPUBLIC OF MALDIVES

PROJECT TITLE
HULHUMALE' POLICE STATION
NEIGHBORHOOD - 1

RECOMMENDATION APPROVED BY
ISMAIL NAVEEN
CHIEF SUPERINTENDENT OF POLICE

DESIGN APPROVED BY
AZEEM WAHEED
CHIEF INSPECTOR OF POLICE

APPROVED BY
AHMED MOHAMED
CHIEF SUPERINTENDENT OF POLICE

ARCHITECT / DESIGNER
ISMAIL RAFEEU
POLICE STAFF SERGEANT

DRAWN BY
ISMAIL RAFEEU
POLICE STAFF SERGEANT

STRUCTURAL ENGINEER
RAMEEZ
ADEPT MALDIVES PVT LTD

CHECKED BY
ABDUL WAHID MOHAMED
ADEPT MALDIVES PVT LTD

DATE
15 - 02 - 2015

REVISED DATE

DRAWING NO
S 02

SHEET NO
18/

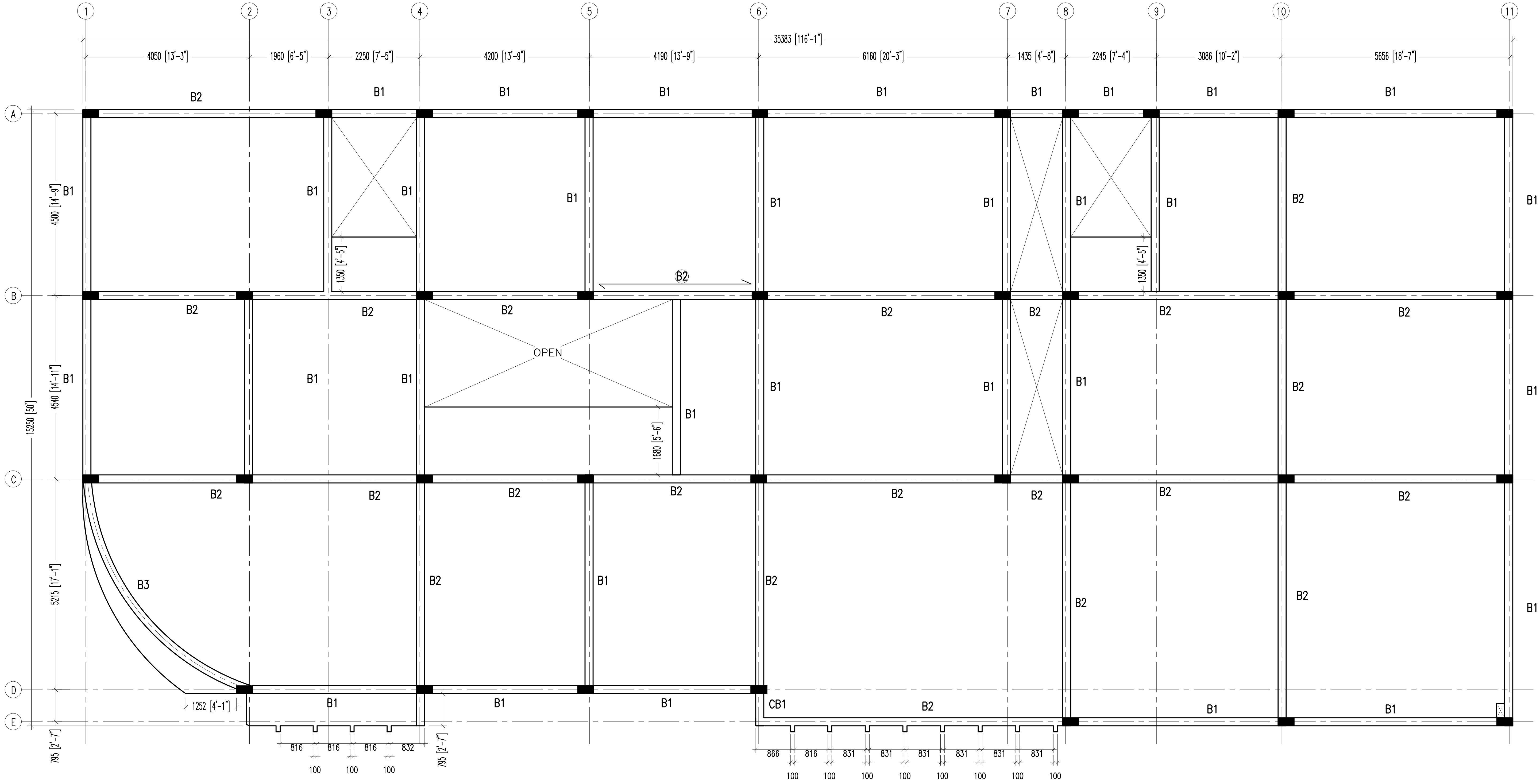
1
2
3
4
5
6
7
8
9
10
11
35383 [116'-1"]
4050 [13'-3"]
1960 [6'-5"]
2250 [7'-5"]
4200 [13'-9"]
4190 [13'-9"]
6160 [20'-3"]
1435 [4'-8"]
2245 [7'-4"]
3086 [10'-2"]
5656 [18'-7"]
A
B
C
D
E
15250 [50']
4500 [14'-9"]
4540 [14'-11"]
5215 [17'-1"]
795 [2'-7"]
1350 [4'-5"]
1680 [5'-6"]
1252 [4'-1"]
OPEN
B1
B2
B3
CB1
816
832
866
831
100

FIRST TO TERRACE FLOOR BEAM PLAN

SCALE 1:100

INFRASTRUCTURE UNIT
FINANCE DEPARTMENT
MALDIVES POLICE SERVICE
MALE' REPUBLIC OF MALDIVES

PROJECT TITLE
HULHUMALE' POLICE STATION NEIGHBORHOOD - 1

RECOMMENDATION APPROVED BY
ISMAIL NAVEEN
CHIEF SUPERINTENDENT OF POLICE

DESIGN APPROVED BY
AZEEM WAHEED
CHIEF INSPECTOR OF POLICE

APPROVED BY
AHMED MOHAMED
CHIEF SUPERINTENDENT OF POLICE

ARCHITECT / DESIGNER
ISMAIL RAFEEU
POLICE STAFF SERGEANT

DRAWN BY
ISMAIL RAFEEU
POLICE STAFF SERGEANT

STRUCTURAL ENGINEER
RAMEEZ
ADEPT MALDIVES PVT LTD

CHECKED BY
ABDUL WAHID MOHAMED
ADEPT MALDIVES PVT LTD

DATE
15 - 02 - 2015

REVISED DATE

DRAWING NO
S 03

SHEET NO
19/

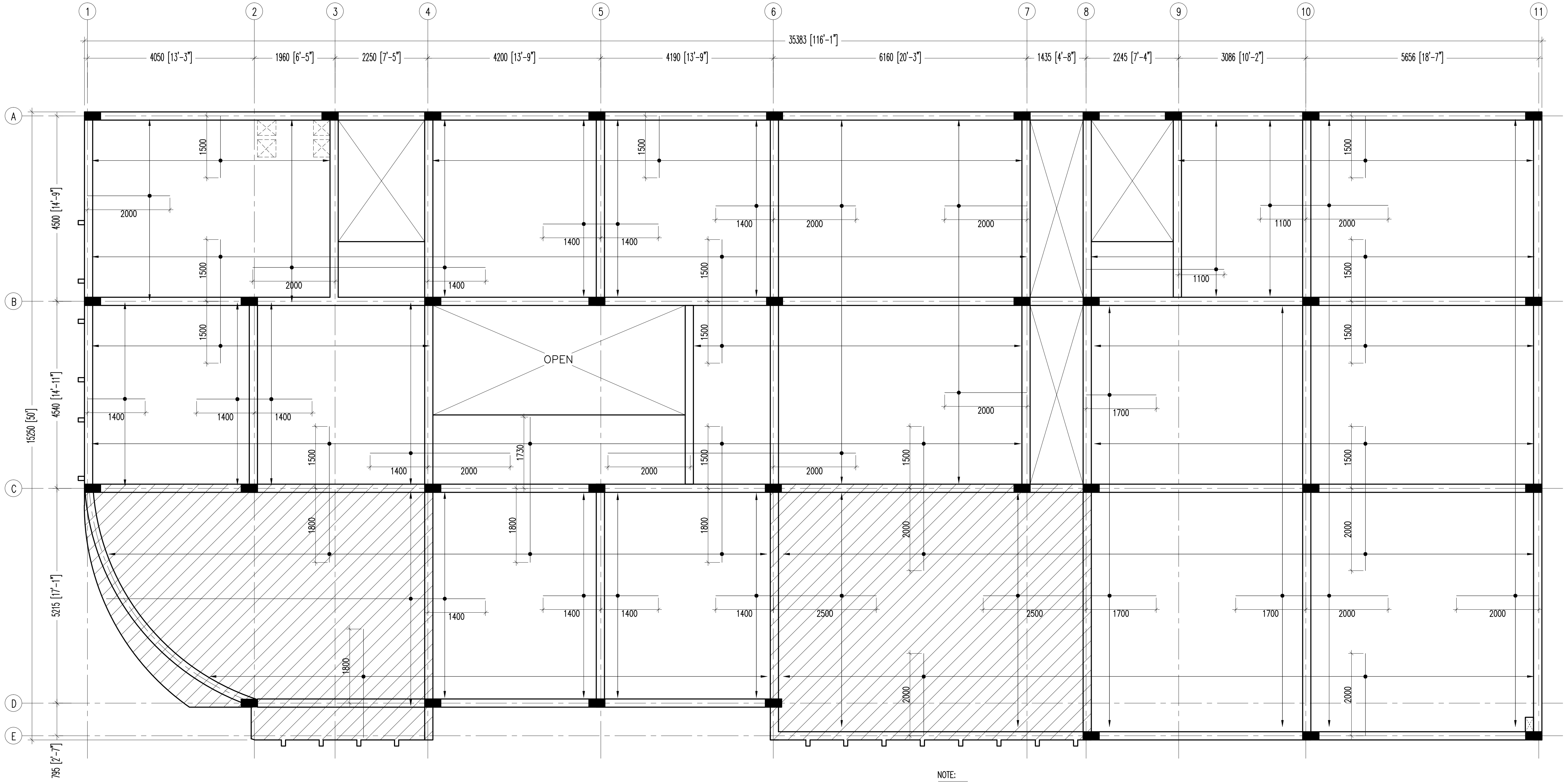
1
2
3
4
5
6
7
8
9
10
11
35383 [116'-1"]
4050 [13'-3"]
1960 [6'-5"]
2250 [7'-5"]
4200 [13'-9"]
4190 [13'-9"]
6160 [20'-3"]
1435 [4'-8"]
2245 [7'-4"]
3086 [10'-2"]
5656 [18'-7"]
A
B
C
D
E
15250 [50']
4500 [14'-9"]
4540 [14'-11"]
5215 [17'-1"]
795 [2'-7"]
OPEN
1500
2000
1400
1100
1700
1730
1800
2500

NOTE:

▨ SLAB THICKNESS: 160mm
BOTTOM REINFORCEMENT: T10@ 150 C/C BW THROUGHOUT (not shown)
TOP REINFORCEMENT : T10@150 C/C (as shown)

☐ SLAB THICKNESS: 140mm
BOTTOM REINFORCEMENT: T10@ 175 C/C BW THROUGHOUT (not shown)
TOP REINFORCEMENT : T10@150 C/C (as shown)
TOP DISTRIBUTION STEEL : T10@300 C/C BW
ALL REINFORCEMENT DISCONTINUE OVER VOIDS

FIRST TO TERRACE FLOOR SLAB REINFORCEMENT PLAN

SCALE 1:100

INFRASTRUCTURE UNIT
FINANCE DEPARTMENT
MALDIVES POLICE SERVICE
MALE' REPUBLIC OF MALDIVES

PROJECT TITLE
HULHUMALE' POLICE STATION
NEIGHBORHOOD - 1

RECOMMENDATION APPROVED BY
ISMAIL NAVEEN
CHIEF SUPERINTENDENT OF POLICE

DESIGN APPROVED BY
AZEEM WAHEED
CHIEF INSPECTOR OF POLICE

APPROVED BY
AHMED MOHAMED
CHIEF SUPERINTENDENT OF POLICE

ARCHITECT / DESIGNER
ISMAIL RAFEEU
POLICE STAFF SERGEANT

DRAWN BY
ISMAIL RAFEEU
POLICE STAFF SERGEANT

STRUCTURAL ENGINEER
RAMEEZ
ADEPT MALDIVES PVT LTD

CHECKED BY
ABDUL WAHID MOHAMED
ADEPT MALDIVES PVT LTD

DATE
15 - 02 - 2015

REVISED DATE

DRAWING NO
S 04

SHEET NO
20/

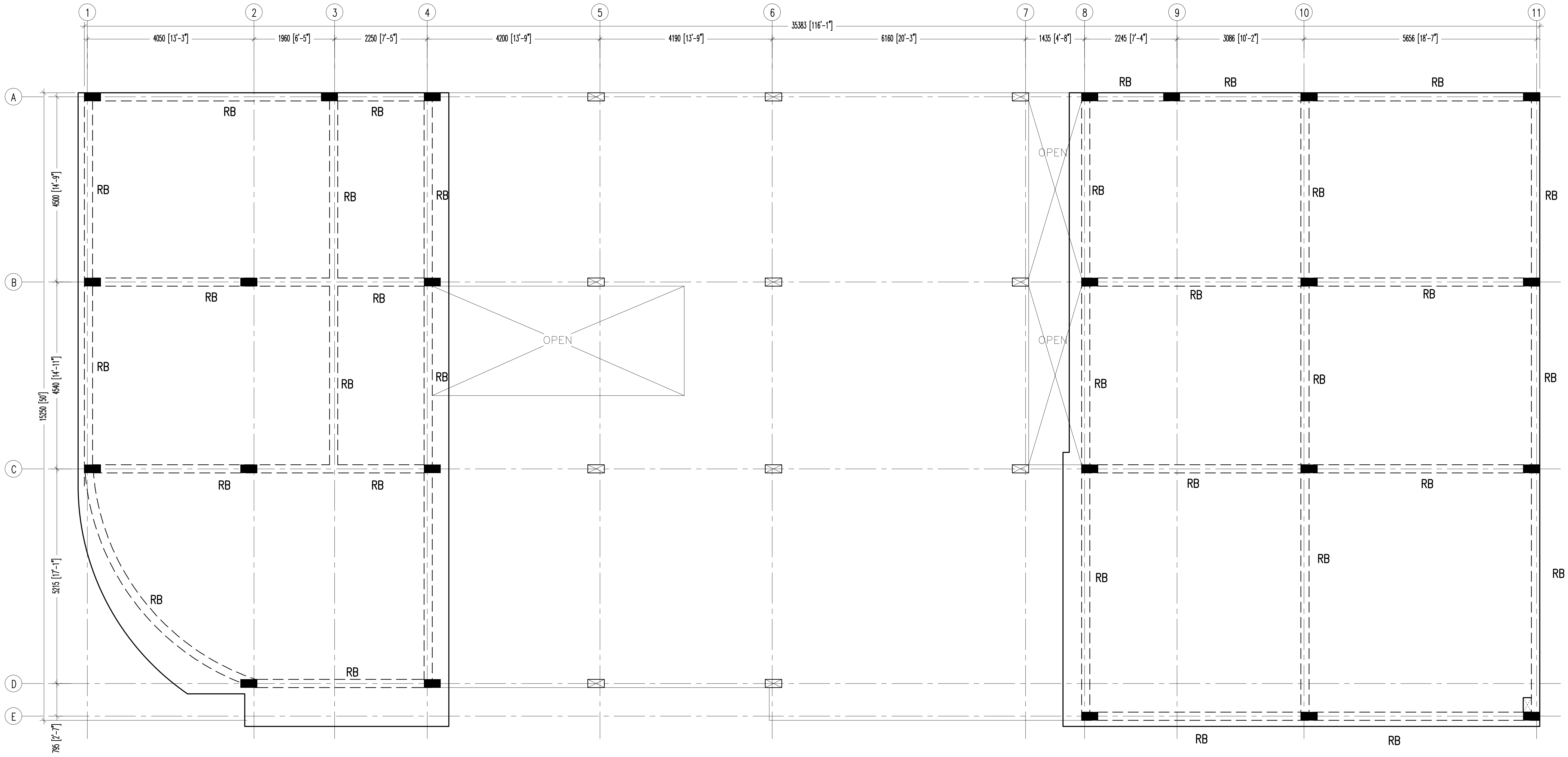
1
2
3
4
5
6
7
8
9
10
11
35383 [116'-1"]
4050 [13'-3"]
1960 [6'-5"]
2250 [7'-5"]
4200 [13'-9"]
4190 [13'-9"]
6160 [20'-3"]
1435 [4'-8"]
2245 [7'-4"]
3086 [10'-2"]
5656 [18'-7"]
A
B
C
D
E
4500 [14'-9"]
4540 [14'-11"]
15250 [50']
5215 [17'-1"]
795 [2'-7"]
RB
OPEN

ROOF BEAM PLAN

SCALE 1:100

INFRASTRUCTURE UNIT
FINANCE DEPARTMENT
MALDIVES POLICE SERVICE
MALE' REPUBLIC OF MALDIVES

PROJECT TITLE

HULHUMALE' POLICE STATION NEIGHBORHOOD - 1

RECOMMENDATION APPROVED BY
ISMAIL NAVEEN
CHIEF SUPERINTENDENT OF POLICE

DESIGN APPROVED BY
AZEEM WAHEED
CHIEF INSPECTOR OF POLICE

APPROVED BY
AHMED MOHAMED
CHIEF SUPERINTENDENT OF POLICE

ARCHITECT / DESIGNER
ISMAIL RAFEEU
POLICE STAFF SERGEANT

DRAWN BY
ISMAIL RAFEEU
POLICE STAFF SERGEANT

STRUCTURAL ENGINEER
RAMEEZ
ADEPT MALDIVES PVT LTD

CHECKED BY
ABDUL WAHID MOHAMED
ADEPT MALDIVES PVT LTD

DATE
15 - 02 - 2015

REVISED DATE

DRAWING NO
S 05

SHEET NO
21/

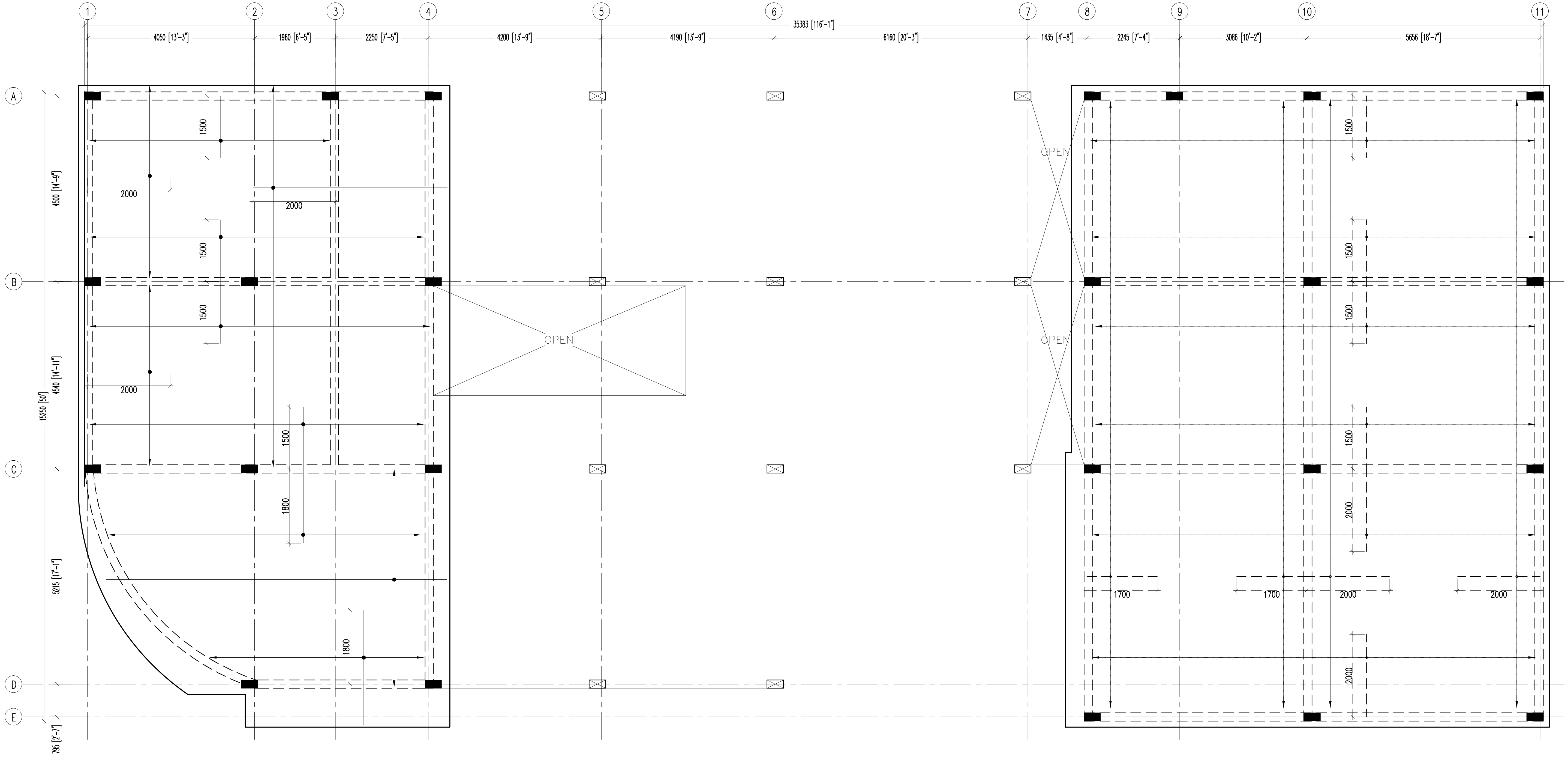
1
2
3
4
5
6
7
8
9
10
11
35383 [116'-1"]
4050 [13'-3"]
1960 [6'-5"]
2250 [7'-5"]
4200 [13'-9"]
4190 [13'-9"]
6160 [20'-3"]
1435 [4'-8"]
2245 [7'-4"]
3086 [10'-2"]
5656 [18'-7"]
A
B
C
D
E
4500 [14'-9"]
4540 [14'-11"]
15250 [50']
5215 [17'-1"]
795 [2'-7"]
1500
2000
2000
1500
1500
2000
1500
1800
1800
OPEN
OPEN
OPEN
1500
1500
1500
1500
2000
2000
1700
1700
2000
2000

NOTE:

▭ SLAB THICKNESS: 135mm
BOTTOM REINFORCEMENT: T10@ 175 C/C BW THROUGHOUT (not shown)
TOP REINFORCEMENT : T10@150 C/C (as shown)
TOP DISTRIBUTION STEEL : T10@300 C/C BW
ALL REINFORCEMENT DISCONTINUE OVER VOIDS

ROOF SLAB REINFORCEMENT PLAN

SCALE 1:100

INFRASTRUCTURE UNIT
FINANCE DEPARTMENT
MALDIVES POLICE SERVICE
MALE' REPUBLIC OF MALDIVES

PROJECT TITLE
HULHUMALE' POLICE STATION
NEIGHBORHOOD - 1

RECOMMENDATION APPROVED BY
ISMAIL NAVEEN
CHIEF SUPERINTENDENT OF POLICE

DESIGN APPROVED BY
AZEEM WAHEED
CHIEF INSPECTOR OF POLICE

APPROVED BY
AHMED MOHAMED
CHIEF SUPERINTENDENT OF POLICE

ARCHITECT / DESIGNER
ISMAIL RAFEEU
POLICE STAFF SERGEANT

DRAWN BY
ISMAIL RAFEEU
POLICE STAFF SERGEANT

STRUCTURAL ENGINEER
RAMEEZ
ADEPT MALDIVES PVT LTD

CHECKED BY
ABDUL WAHID MOHAMED
ADEPT MALDIVES PVT LTD

DATE
15 - 02 - 2015

REVISED DATE

DRAWING NO
S 06

SHEET NO
22/

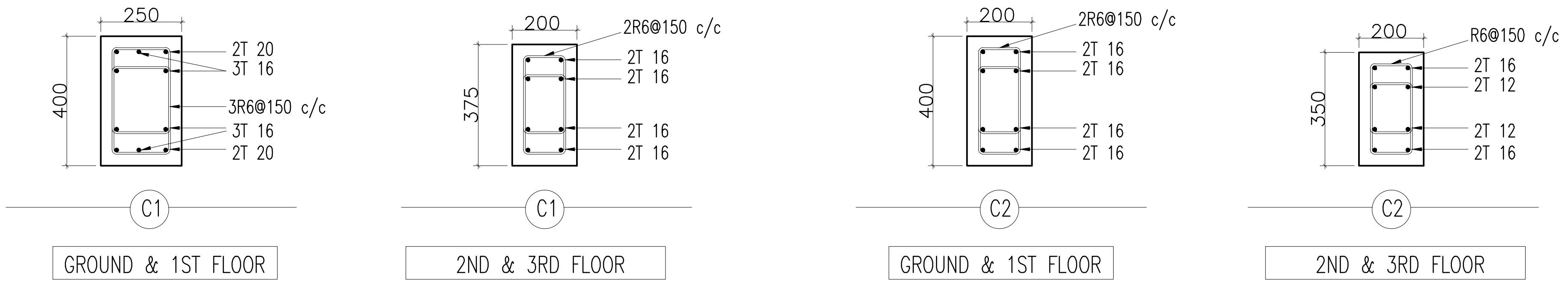
250
400
2T 20
3T 16
3R6@150 c/c
3T 16
2T 20
C1
GROUND & 1ST FLOOR
200
375
2R6@150 c/c
2T 16
2T 16
2T 16
2T 16
C1
2ND & 3RD FLOOR
200
400
2R6@150 c/c
2T 16
2T 16
2T 16
2T 16
C2
GROUND & 1ST FLOOR
200
350
R6@150 c/c
2T 16
2T 12
2T 12
2T 16
C2
2ND & 3RD FLOOR

COLUMN DETAILS

Scale 1:20

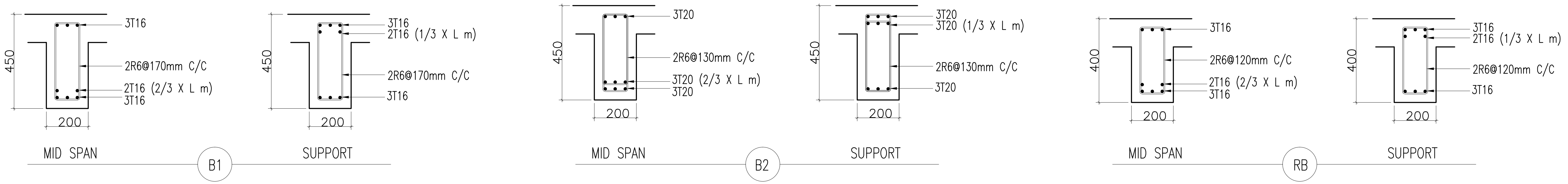
3T16
450
2R6@170mm C/C
2T16 (2/3 X L m)
3T16
200
MID SPAN
3T16
2T16 (1/3 X L m)
450
2R6@170mm C/C
3T16
200
SUPPORT
B1
3T20
450
2R6@130mm C/C
3T20 (2/3 X L m)
3T20
200
MID SPAN
3T20
3T20 (1/3 X L m)
450
2R6@130mm C/C
3T20
200
SUPPORT
B2
3T16
400
2R6@120mm C/C
2T16 (2/3 X L m)
3T16
200
MID SPAN
3T16
2T16 (1/3 X L m)
400
2R6@120mm C/C
3T16
200
SUPPORT
RB

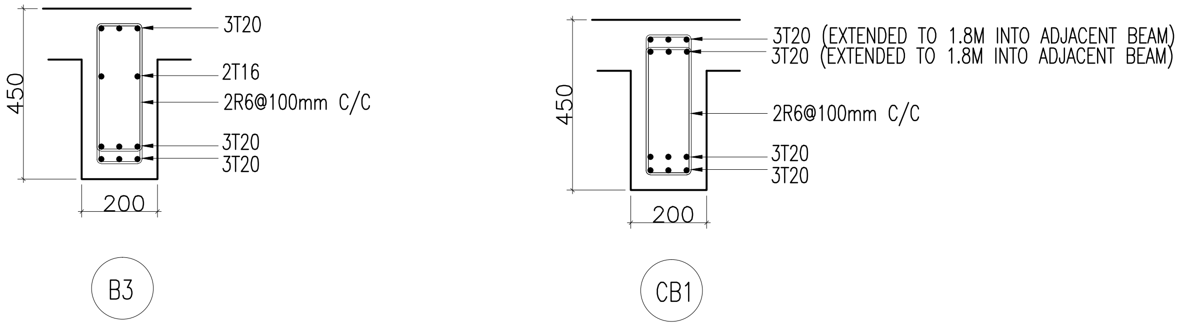
3T20
450
2T16
2R6@100mm C/C
3T20
3T20
200
B3
3T20 (EXTENDED TO 1.8M INTO ADJACENT BEAM)
3T20 (EXTENDED TO 1.8M INTO ADJACENT BEAM)
450
2R6@100mm C/C
3T20
3T20
200
CB1

BEAM DETAIL

Scale 1:20

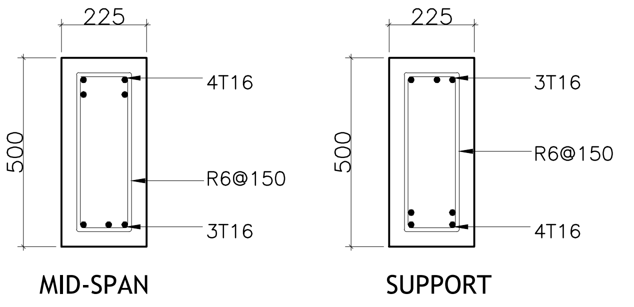
225
500
4T16
R6@150
3T16
MID-SPAN
225
500
3T16
R6@150
4T16
SUPPORT

TIE BEAM TB1

SCALE 1:20

INFRASTRUCTURE UNIT
FINANCE DEPARTMENT
MALDIVES POLICE SERVICE
MALE' REPUBLIC OF MALDIVES

PROJECT TITLE

HULHUMALE' POLICE STATION
NEIGHBORHOOD - 1

RECOMMENDATION APPROVED BY
ISMAIL NAVEEN
CHIEF SUPERINTENDENT OF POLICE

DESIGN APPROVED BY
AZEEM WAHEED
CHIEF INSPECTOR OF POLICE

APPROVED BY
AHMED MOHAMED
CHIEF SUPERINTENDENT OF POLICE

ARCHITECT / DESIGNER
ISMAIL RAFEEU
POLICE STAFF SERGEANT

DRAWN BY
ISMAIL RAFEEU
POLICE STAFF SERGEANT

STRUCTURAL ENGINEER
RAMEEZ
ADEPT MALDIVES PVT LTD

CHECKED BY
ABDUL WAHID MOHAMED
ADEPT MALDIVES PVT LTD

DATE
15 - 02 - 2015

REVISED DATE

DRAWING NO
S 07

SHEET NO
23/

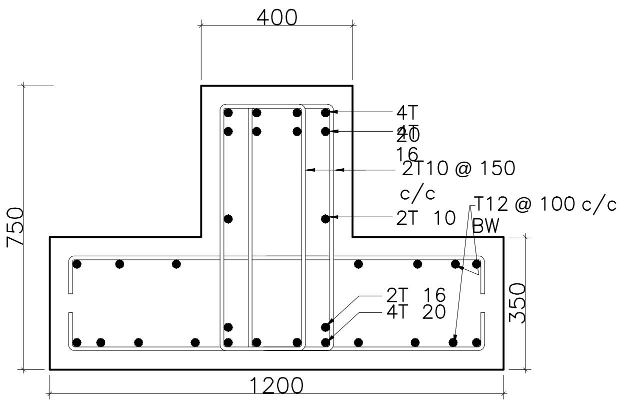
400
750
350
1200
4T 20
4T 16
2T10 @ 150 c/c
2T 10
T12 @ 100 c/c BW
2T 16
4T 20

AT MID SPAN

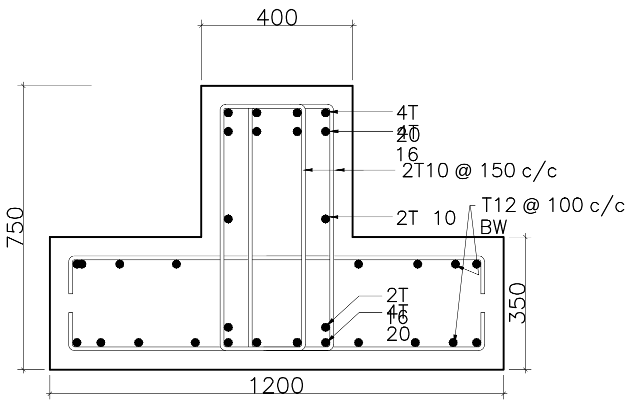
400
750
350
1200
4T 20
4T 16
2T10 @ 150 c/c
2T 10
T12 @ 100 c/c BW
2T 16
4T 20

AT SUPPORTS

ST1

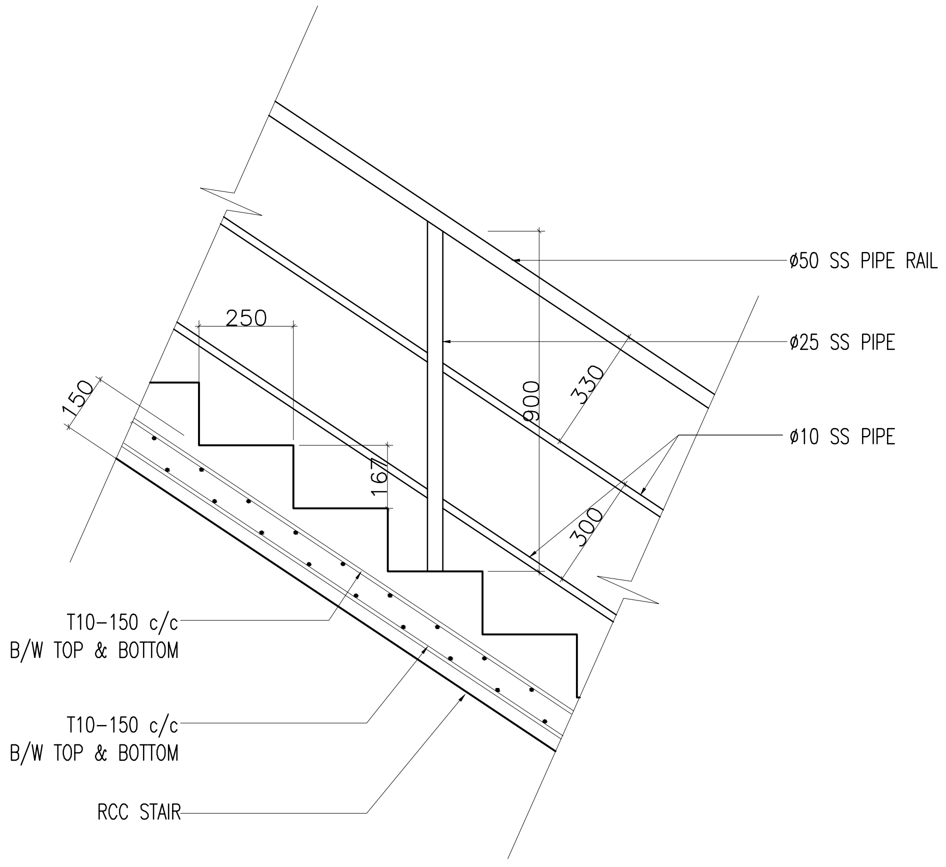
ø50 SS PIPE RAIL
ø25 SS PIPE
ø10 SS PIPE
250
150
167
900
330
300
T10-150 c/c
B/W TOP & BOTTOM
T10-150 c/c
B/W TOP & BOTTOM
RCC STAIR

STAIR DETAIL

Scale 1:20

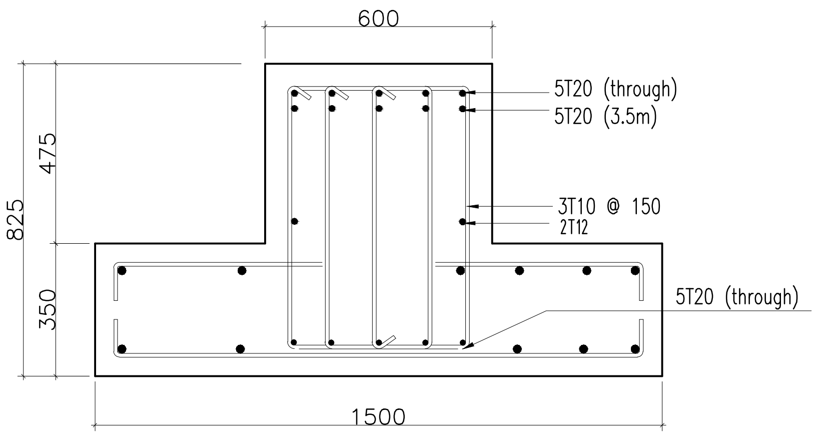
600
825
475
350
1500
5T20 (through)
5T20 (3.5m)
3T10 @ 150
2T12
5T20 (through)

MID SPAN

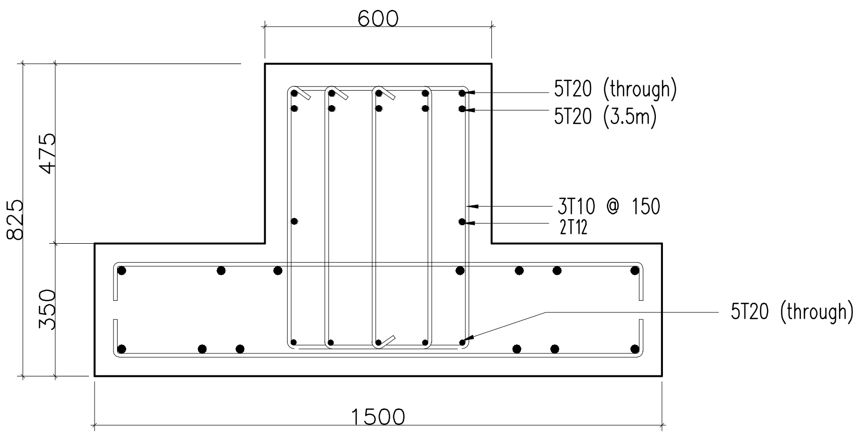
600
825
475
350
1500
5T20 (through)
5T20 (3.5m)
3T10 @ 150
2T12
5T20 (through)

SUPPORT

ST-2

FOUNDATION DETAIL

Scale 1:20

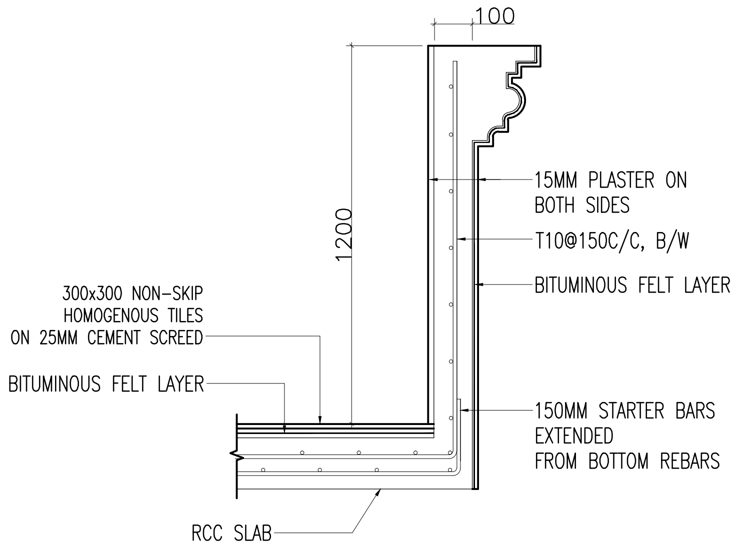
100
1200
15MM PLASTER ON
BOTH SIDES
T10@150C/C, B/W
BITUMINOUS FELT LAYER
300x300 NON-SKIP
HOMOGENOUS TILES
ON 25MM CEMENT SCREED
BITUMINOUS FELT LAYER
150MM STARTER BARS
EXTENDED
FROM BOTTOM REBARS
RCC SLAB

TYPICAL BALCONY DETAIL

Scale 1:20

INFRASTRUCTURE UNIT
FINANCE DEPARTMENT
MALDIVES POLICE SERVICE
MALE' REPUBLIC OF MALDIVES

PROJECT TITLE
HULHUMALE' POLICE STATION
NEIGHBORHOOD - 1

RECOMMENDATION APPROVED BY
ISMAIL NAVEEN
CHIEF SUPERINTENDENT OF POLICE

DESIGN APPROVED BY
AZEEM WAHEED
CHIEF INSPECTOR OF POLICE

APPROVED BY
AHMED MOHAMED
CHIEF SUPERINTENDENT OF POLICE

ARCHITECT / DESIGNER
ISMAIL RAFEEU
POLICE STAFF SERGEANT

STRUCTURAL ENGINEER
RAMEEZ
ADEPT MALDIVES PVT LTD

DRAWN BY
ISMAIL RAFEEU
POLICE STAFF SERGEANT

CHECKED BY
ABDUL WAHID MOHAMED
ADEPT MALDIVES PVT LTD

DATE
15 - 02 - 2015

REVISED DATE

DRAWING NO
S 08

SHEET NO
24/

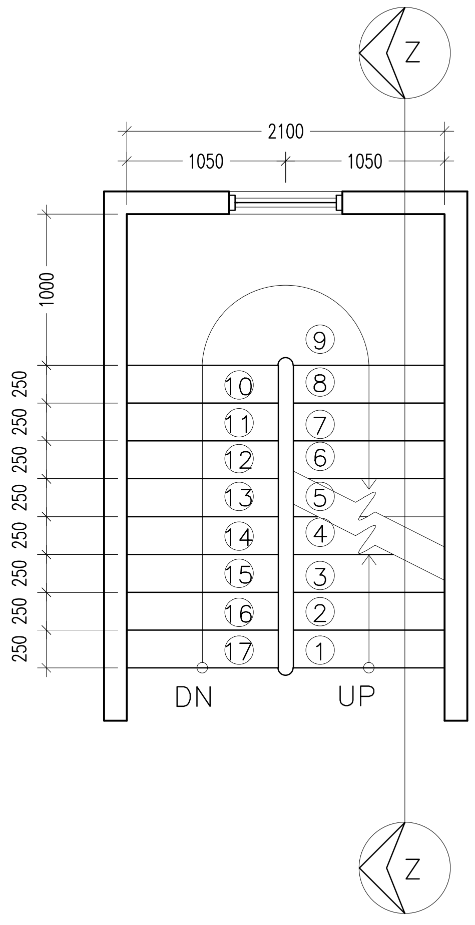
Z
2100
1050
1050
1000
250
⑨
⑩ ⑧
⑪ ⑦
⑫ ⑥
⑬ ⑤
⑭ ④
⑮ ③
⑯ ②
⑰ ①
DN
UP
Z

STAIR PLAN (GROUND TO THIRD FLOOR)

SCALE 1:50

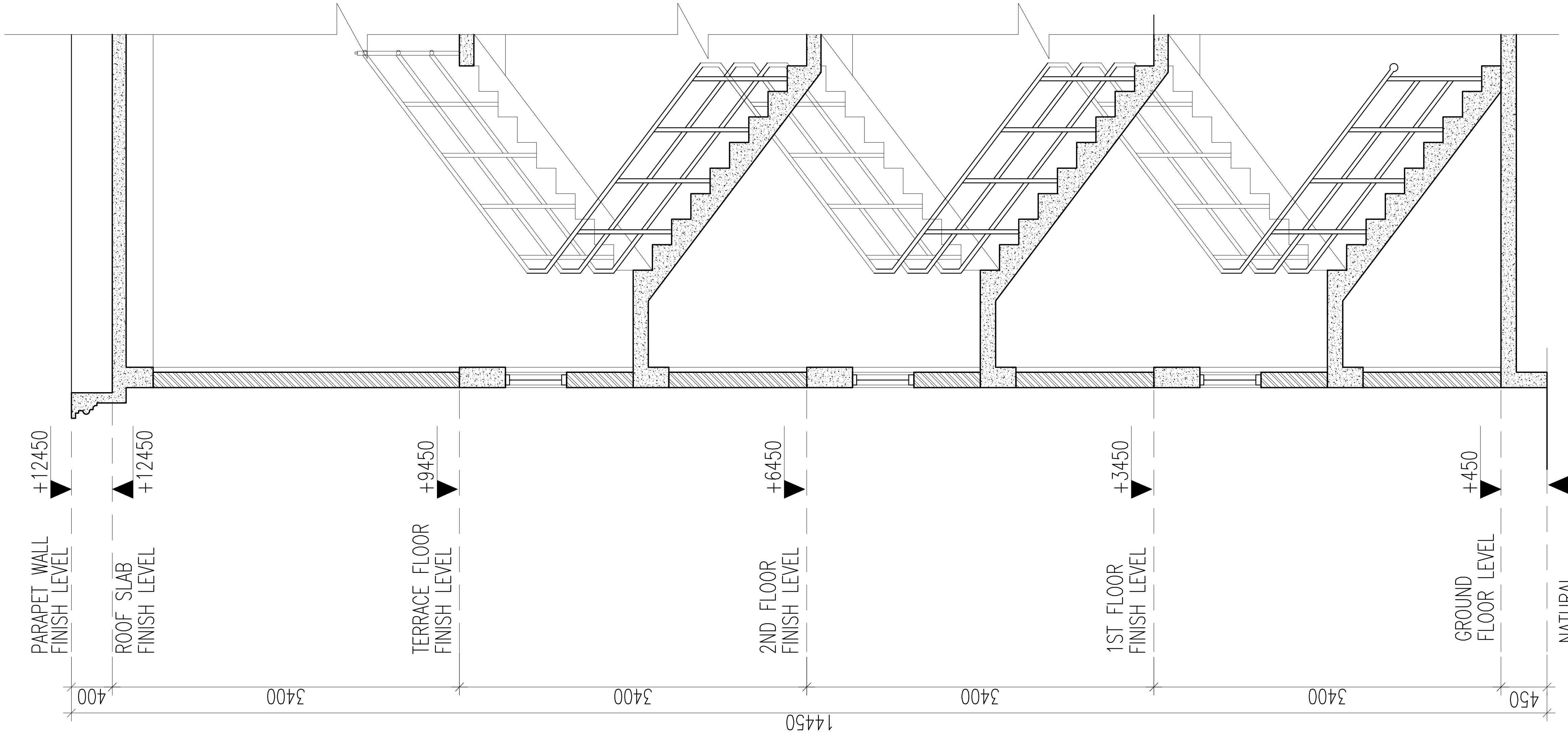
+12450
PARAPET WALL FINISH LEVEL
+12450
ROOF SLAB FINISH LEVEL
+9450
TERRACE FLOOR FINISH LEVEL
+6450
2ND FLOOR FINISH LEVEL
+3450
1ST FLOOR FINISH LEVEL
+450
GROUND FLOOR LEVEL
±000
NATURAL GROUND LEVEL
400
3400
3400
3400
3400
450
14450

SECTION Z-Z

SCALE 1:50

INFRASTRUCTURE UNIT
FINANCE DEPARTMENT
MALDIVES POLICE SERVICE
MALE' REPUBLIC OF MALDIVES

PROJECT TITLE
HULHUMALE' POLICE STATION NEIGHBORHOOD - 1

RECOMMENDATION APPROVED BY
ISMAIL NAVEEN
CHIEF SUPERINTENDENT OF POLICE

DESIGN APPROVED BY
AZEEM WAHEED
CHIEF INSPECTOR OF POLICE

APPROVED BY
AHMED MOHAMED
CHIEF SUPERINTENDENT OF POLICE

ARCHITECT / DESIGNER
ISMAIL RAFEEU
POLICE STAFF SERGEANT

STRUCTURAL ENGINEER
RAMEEZ
ADEPT MALDIVES PVT LTD

DRAWN BY
ISMAIL RAFEEU
POLICE STAFF SERGEANT

CHECKED BY
ABDUL WAHID MOHAMED
ADEPT MALDIVES PVT LTD

DATE
15 - 02 - 2015

REVISED DATE

DRAWING NO
S 09

SHEET NO
25/

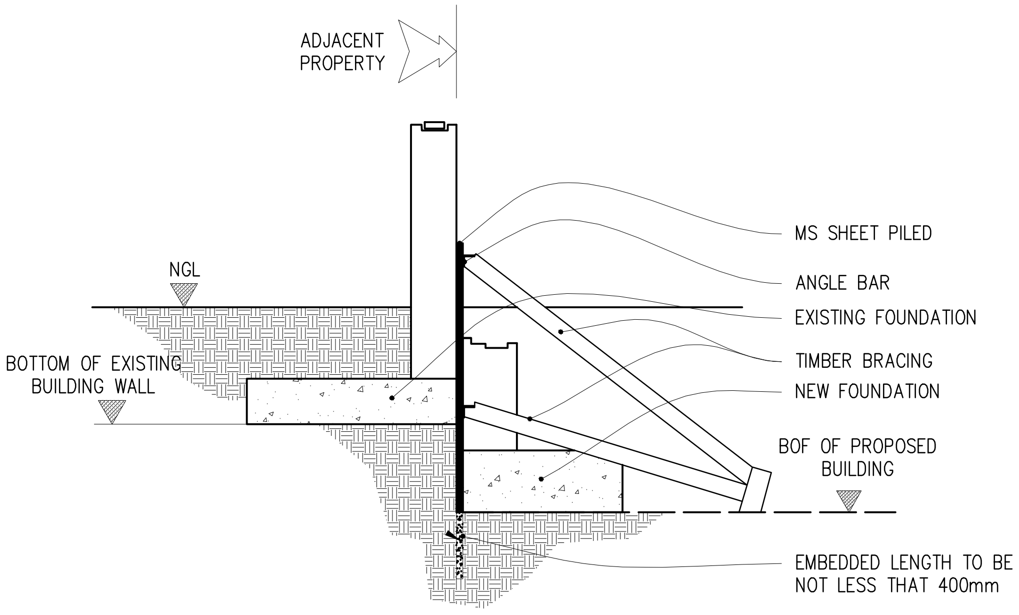
ADJACENT PROPERTY
NGL
BOTTOM OF EXISTING BUILDING WALL
MS SHEET PILED
ANGLE BAR
EXISTING FOUNDATION
TIMBER BRACING
NEW FOUNDATION
BOF OF PROPOSED BUILDING
EMBEDDED LENGTH TO BE NOT LESS THAT 400mm

WHERE FOOTINGS COINCIDE OR FALL ON THE SAME GRIDE

SCALE 1:50

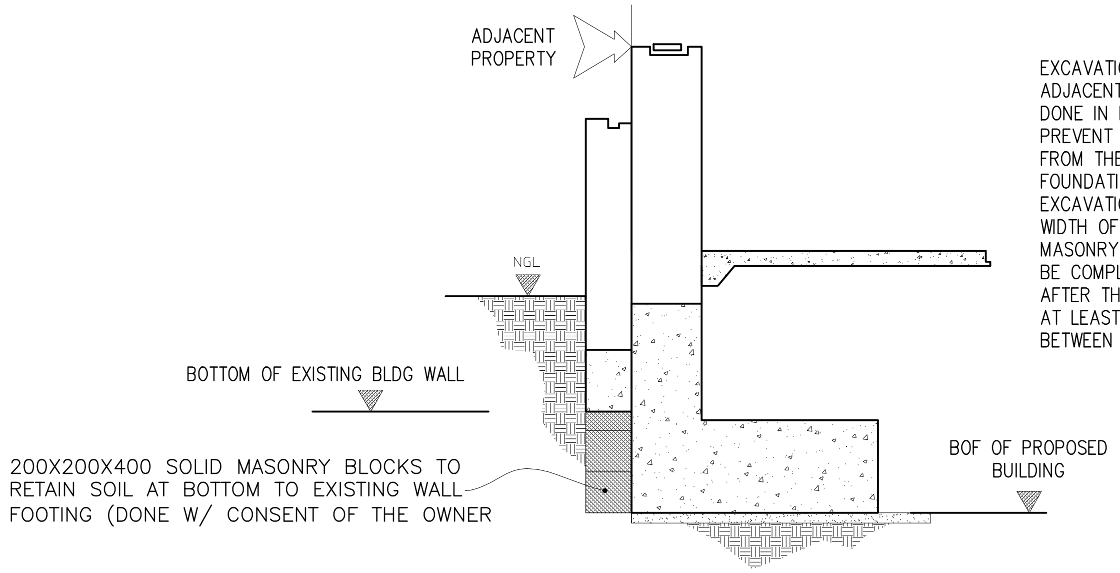
ADJACENT PROPERTY
NGL
BOTTOM OF EXISTING BLDG WALL
200X200X400 SOLID MASONRY BLOCKS TO RETAIN SOIL AT BOTTOM TO EXISTING WALL FOOTING (DONE W/ CONSENT OF THE OWNER
BOF OF PROPOSED BUILDING

EXCAVATION ALONG THE ADJACENT BUILDINGS SHALL BE DONE IN PARTS SO AS TO PREVENT LOOSENING OF SOIL FROM THE BOTTOM OF EXISTING FOUNDATIONS. NO PARTIAL EXCAVATION SHALL EXCEED A WIDTH OF 0.6M AT A TIME & MASONRY RETAINING WALL MUST BE COMPLETED IMMEDIATELY AFTER THE EXCAVATION. ALLOW AT LEAST 24HR INTERVALS BETWEEN EACH EXCAVATION.

PROTECTION OF EXISTING WALLS ALONG THE PERIMETER OF THE PROPOSED SITE

SCALE 1:50

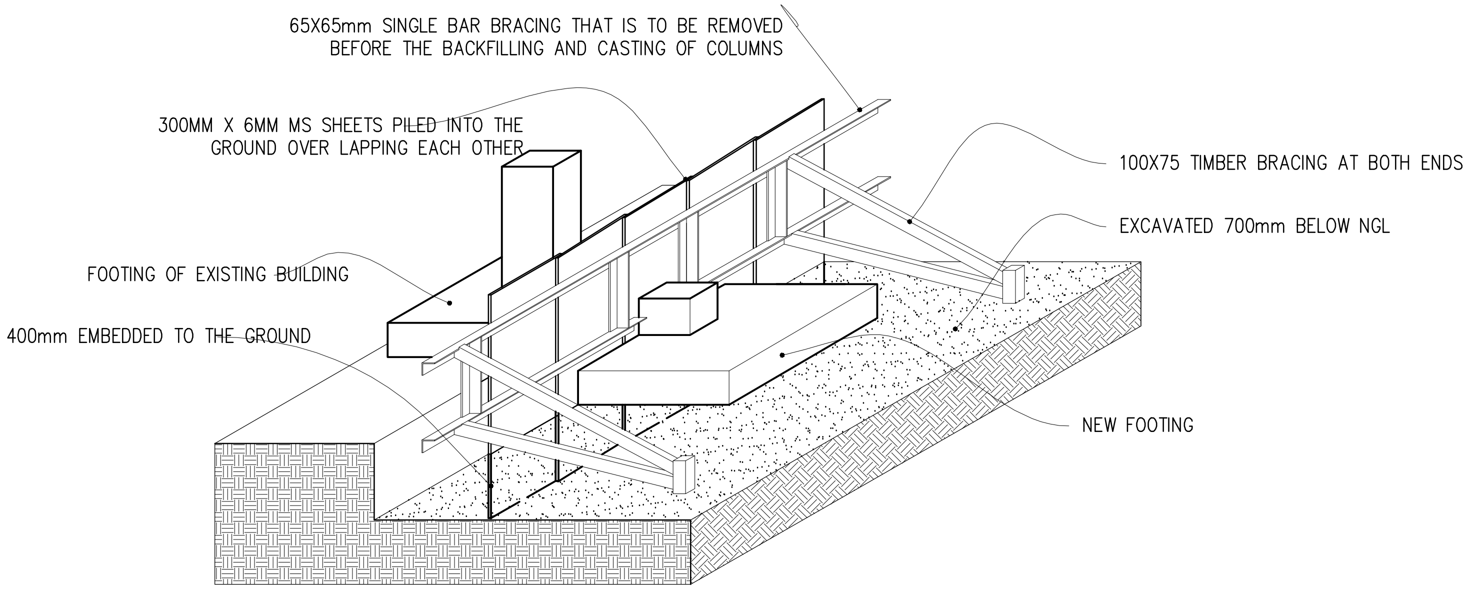
65X65mm SINGLE BAR BRACING THAT IS TO BE REMOVED BEFORE THE BACKFILLING AND CASTING OF COLUMNS
300MM X 6MM MS SHEETS PILED INTO THE GROUND OVER LAPPING EACH OTHER
100X75 TIMBER BRACING AT BOTH ENDS
EXCAVATED 700mm BELOW NGL
FOOTING OF EXISTING BUILDING
400mm EMBEDDED TO THE GROUND
NEW FOOTING

SHORING DETAILS

SCALE 1:50

INFRASTRUCTURE UNIT
FINANCE DEPARTMENT
MALDIVES POLICE SERVICE
MALE' REPUBLIC OF MALDIVES

PROJECT TITLE
HULHUMALE' POLICE STATION NEIGHBORHOOD - 1

RECOMMENDATION APPROVED BY
ISMAIL NAVEEN
CHIEF SUPERINTENDENT OF POLICE

DESIGN APPROVED BY
AZEEM WAHEED
CHIEF INSPECTOR OF POLICE

APPROVED BY
AHMED MOHAMED
CHIEF SUPERINTENDENT OF POLICE

ARCHITECT / DESIGNER
ISMAIL RAFEEU
POLICE STAFF SERGEANT

STRUCTURAL ENGINEER
RAMEEZ
ADEPT MALDIVES PVT LTD

DRAWN BY
ISMAIL RAFEEU
POLICE STAFF SERGEANT

CHECKED BY
ABDUL WAHID MOHAMED
ADEPT MALDIVES PVT LTD

DATE
15 - 02 - 2015

REVISED DATE

DRAWING NO
S 10

SHEET NO
26/

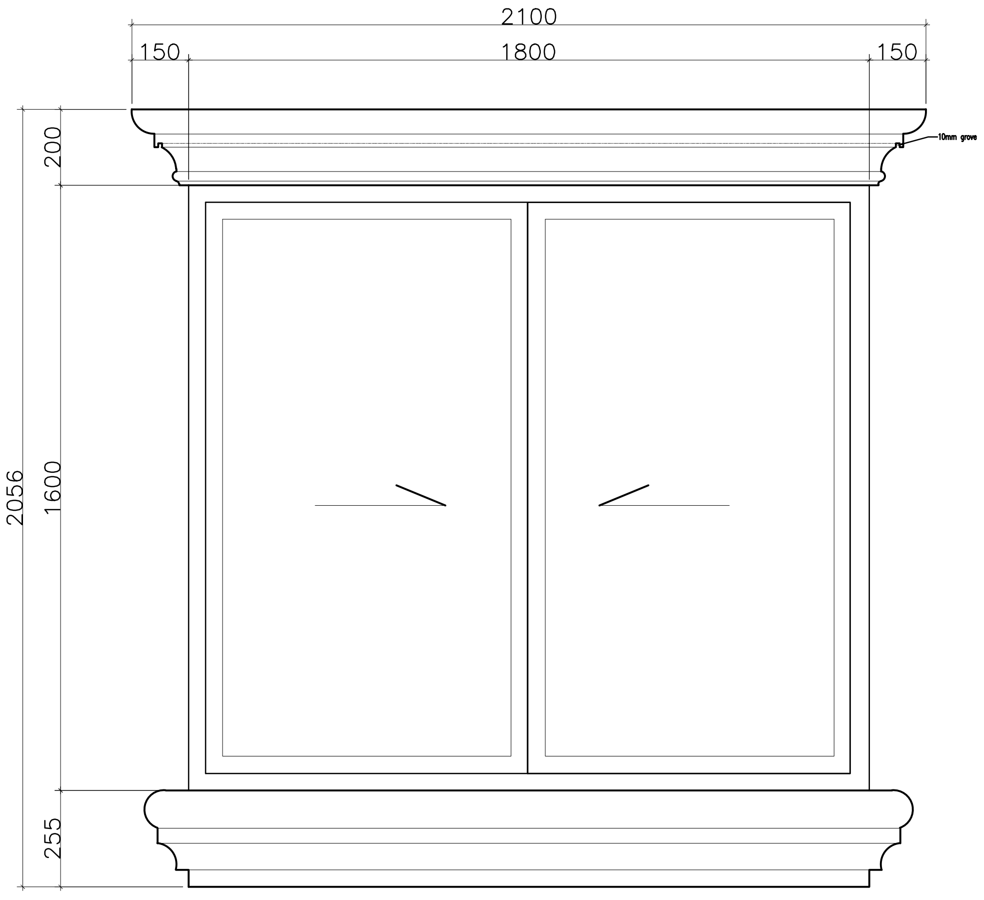
2100
150
1800
150
10mm grove
200
2056
1600
255

W1

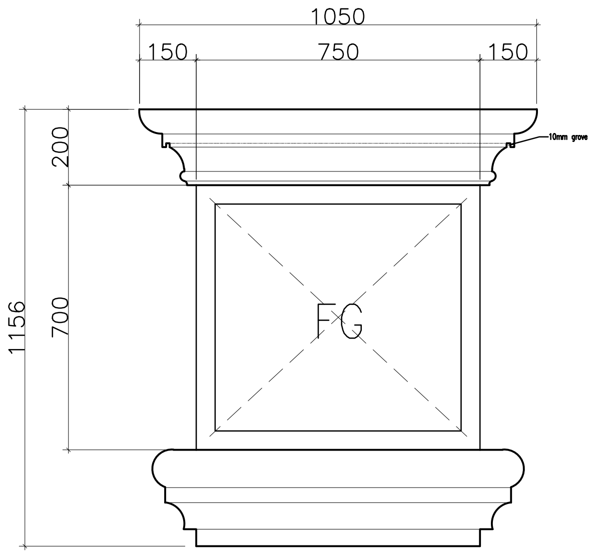
1050
150
750
150
10mm grove
200
1156
700
FG

W2

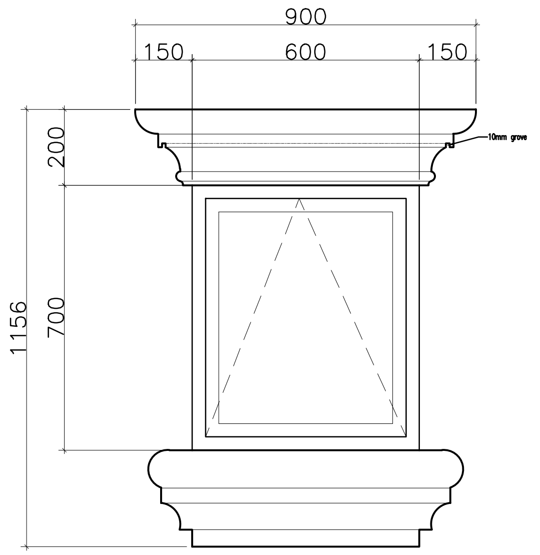
900
150
600
150
10mm grove
200
1156
700

W3

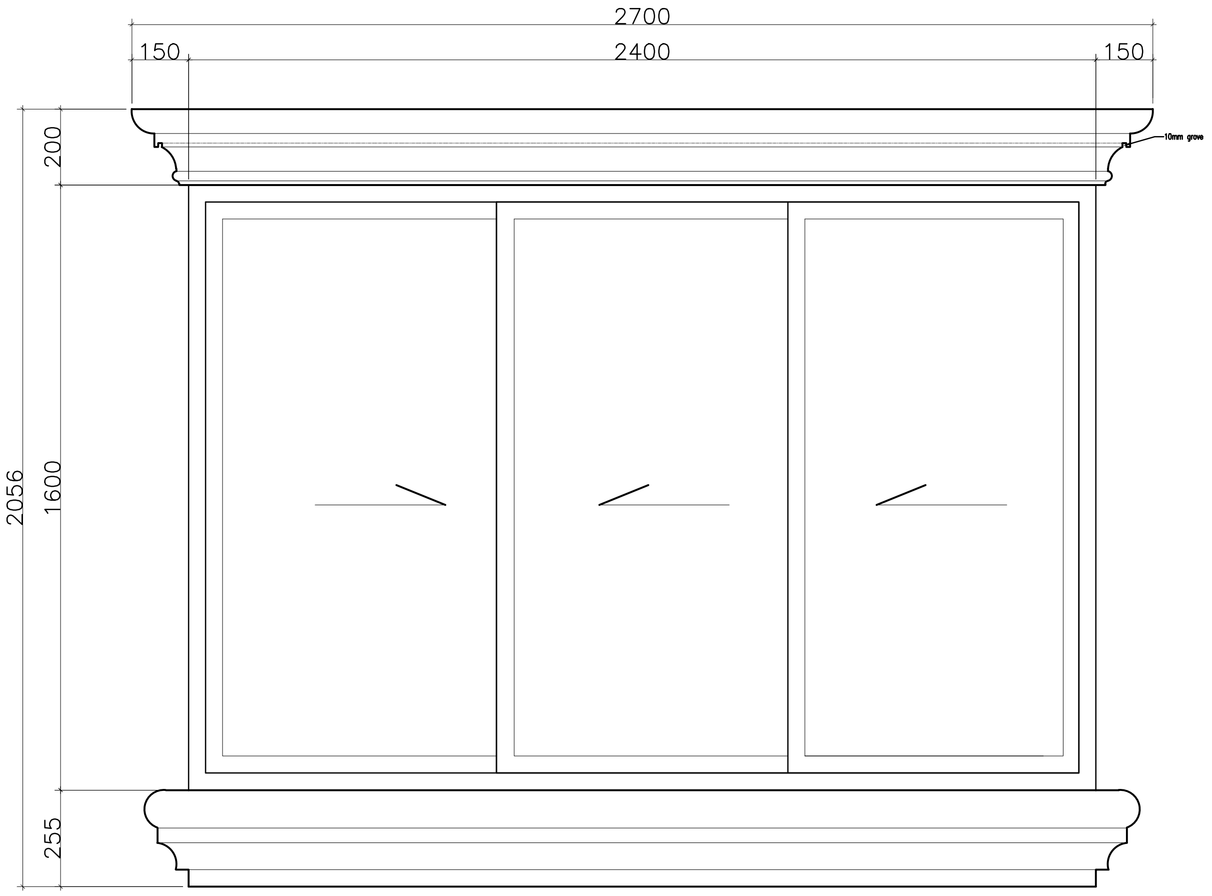
2700
150
2400
150
10mm grove
200
2056
1600
255

W5

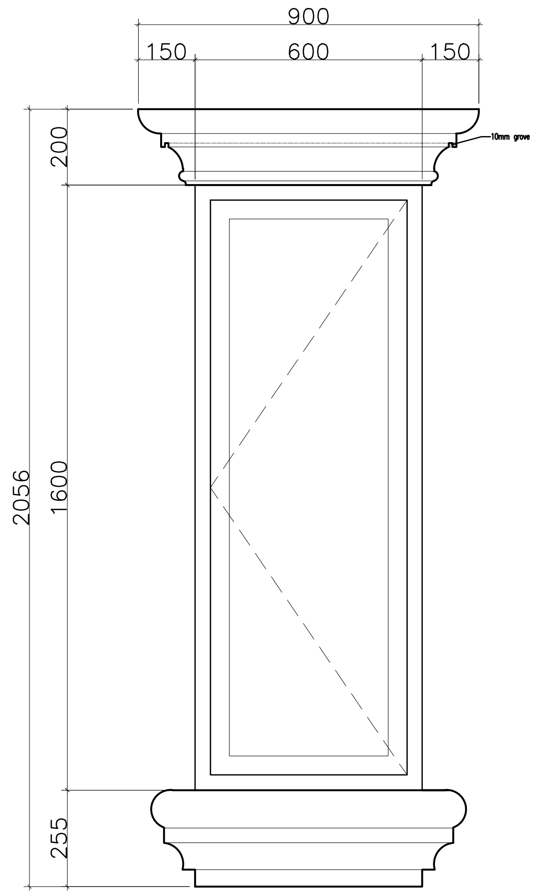
900
150
600
150
10mm grove
200
2056
1600
255

W8

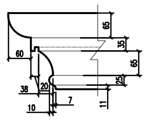
65
35
65
25
11
60
38
20
10
7

LINTEL BEAM DETAIL
Scale 1:10

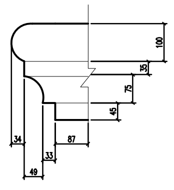
100
35
75
45
34
87
33
49

SILL BEAM DETAIL
Scale 1:10

WINDOW SILL & LINTEL BEAM DETAILS

Scale 1:20

INFRASTRUCTURE UNIT
FINANCE DEPARTMENT
MALDIVES POLICE SERVICE
MALE' REPUBLIC OF MALDIVES

PROJECT TITLE
HULHUMALE' POLICE STATION NEIGHBORHOOD - 1

RECOMMENDATION APPROVED BY
ISMAIL NAVEEN
CHIEF SUPERINTENDENT OF POLICE

DESIGN APPROVED BY
AZEEM WAHEED
CHIEF INSPECTOR OF POLICE

APPROVED BY
AHMED MOHAMED
CHIEF SUPERINTENDENT OF POLICE

ARCHITECT / DESIGNER
ISMAIL RAFEEU
POLICE STAFF SERGEANT

DRAWN BY
ISMAIL RAFEEU
POLICE STAFF SERGEANT

STRUCTURAL ENGINEER
RAMEEZ
ADEPT MALDIVES PVT LTD

CHECKED BY
ABDUL WAHID MOHAMED
ADEPT MALDIVES PVT LTD

DATE
15 - 02 - 2015

REVISED DATE

DRAWING NO
D 08

SHEET NO
27/

ELECTRICAL LEGEND

- MAIN DISTRIBUTION BOARD (MDB)
- D-BOARD (DB)
- CEILING RECESSED LIGHT
- CEILING MOUNT LIGHT
- WALL MOUNT LIGHT 2.3M
- WALL MOUNT LIGHT 2.3M (DIM)
- WALL MOUNT LIGHT 0.3M WEATHERPROOF
- WALL MOUNT LIGHT 2.1M, WEATHERPROOF
- CEILING MOUNT LIGHT, WEATHERPROOF
- EMERGENCY LIGHT
- CEILING FAN
- WALL MOUNTED FAN (WF)
- DIM LIGHT DIMER
- FAN REGULATOR (FD)
- ONE WAY SWITCH 1.2M (1GNG) (1G)
- ONE WAY SWITCH 1.2M (2GNG) (2G)
- ONE WAY SWITCH 1.2M (3GNG) (3G)
- ONE WAY SWITCH 1.2M (4GNG) (4G)
- TWO WAY SWITCH 1.2M (2GNG) (2G)
- 13A WALL SOCKET OUTLET 0.3m (SGL GNG) (0.3)
- 13A WALL SOCKET OUTLET 1.2m (SGL GNG) (1.2)
- 13A WALL SOCKET OUTLET 2.1m (SGL GNG) (2.1)
- 13A WALL SOCKET OUTLET 0.3m (DBL GNG) (0.3)
- 13A WALL SOCKET OUTLET 1.2m (DBL GNG) (1.2)
- 13A WALL SOCKET OUTLET 2.1m (DBL GNG) (2.1)
- TELEPHONE SOCKET
- NET WORK (NET)
- CABLE TV (TV)
- CCTV CAMERA
- 2x4' ceiling recessed tube light with prismatic cover
- 9000 BTU with 15Amp Socket outlet
- 12000 BTU with 15Amp Socket outlet
- 18000 BTU with 15Amp Socket outlet
- 24000 BTU with 15Amp Socket outlet

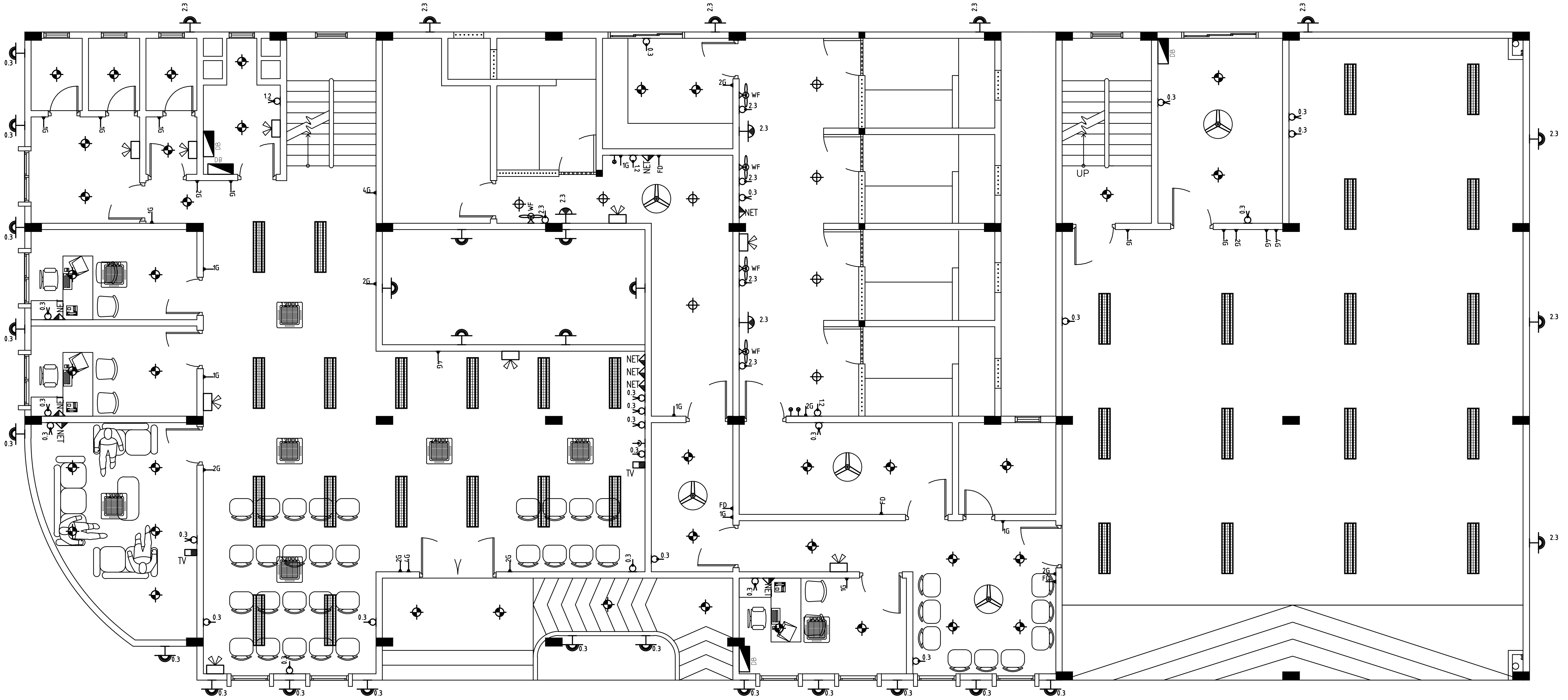

GROUND FLOOR PLAN

SCALE 1:100

INFRASTRUCTURE UNIT
FINANCE DEPARTMENT
MALDIVES POLICE SERVICE
MALE' REPUBLIC OF MALDIVES

PROJECT TITLE
HULHUMALE' POLICE STATION NEIGHBORHOOD - 1

RECOMMENDATION APPROVED BY
ISMAIL NAVEEN
CHIEF SUPERINTENDENT OF POLICE

DESIGN APPROVED BY
AZEEM WAHEED
CHIEF INSPECTOR OF POLICE

APPROVED BY
AHMED MOHAMED
CHIEF SUPERINTENDENT OF POLICE

ARCHITECT / DESIGNER
ISMAIL RAFEEU
POLICE STAFF SERGEANT

STRUCTURAL ENGINEER
RAMEEZ
ADEPT MALDIVES PVT LTD

DRAWN BY
ISMAIL RAFEEU
POLICE STAFF SERGEANT

CHECKED BY
ABDUL WAHID MOHAMED
ADEPT MALDIVES PVT LTD

DATE
15 - 02 - 2015

REVISED DATE

DRAWING NO
A 03

SHEET NO
03/26

ELECTRICAL LEGEND

MDB MAIN DISTRIBUTION BOARD
DB D-BOARD
CEILING RECESSED LIGHT
CEILING MOUNT LIGHT
2.3 WALL MOUNT LIGHT 2.3M
2.3 WALL MOUNT LIGHT 2.3M (DIM)
0.3 WALL MOUNT LIGHT 0.3M WEATHERPROOF
2.3 WALL MOUNT LIGHT 2.1M, WEATHERPROOF
CEILING MOUNT LIGHT, WEATHERPROOF
EMERGENCY LIGHT

CEILING FAN
WF WALL MOUNTED FAN
DIM LIGHT DIMER
FD FAN REGULATOR
1G ONE WAY SWITCH 1.2M (1GNG)
2G ONE WAY SWITCH 1.2M (2GNG)
3G ONE WAY SWITCH 1.2M (3GNG)
4G ONE WAY SWITCH 1.2M (4GNG)
2G TWO WAY SWITCH 1.2M (2GNG)
0.3 13A WALL SOCKET OUTLET 0.3m (SGL GNG)
1.2 13A WALL SOCKET OUTLET 1.2m (SGL GNG)
2.1 13A WALL SOCKET OUTLET 2.1m (SGL GNG)
0.3 13A WALL SOCKET OUTLET 0.3m (DBL GNG)

1.2 13A WALL SOCKET OUTLET 1.2m (DBL GNG)
2.1 13A WALL SOCKET OUTLET 2.1m (DBL GNG)
TELEPHONE SOCKET
NET NET WORK
TV CABLE TV
CCTV CAMERA
2x4' ceiling recessed tube light with prismatic cover

9000 9000 BTU with 15Amp Socket outlet
12000 12000 BTU with 15Amp Socket outlet
18000 18000 BTU with 15Amp Socket outlet
24000 24000 BTU with 15Amp Socket outlet

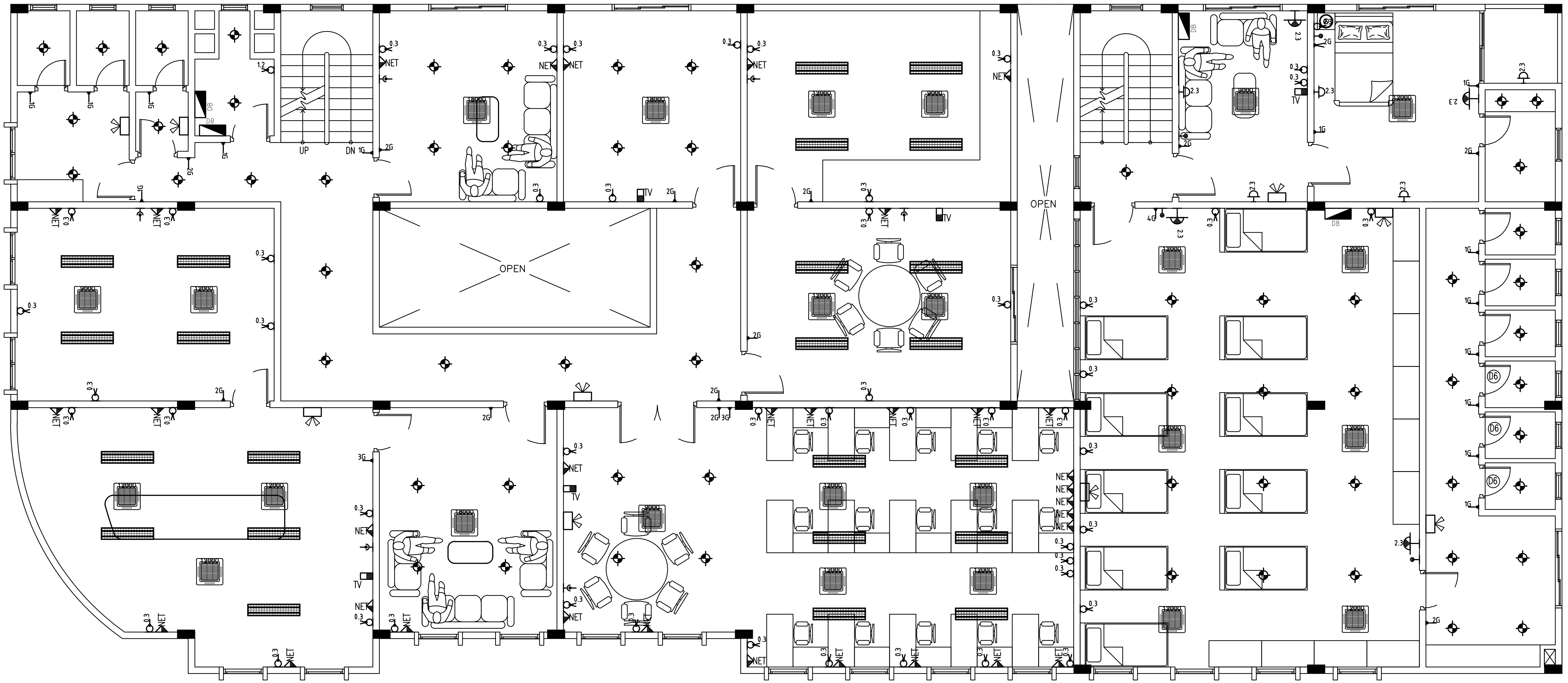

FIRST FLOOR PLAN

SCALE 1:100

INFRASTRUCTURE UNIT
FINANCE DEPARTMENT
MALDIVES POLICE SERVICE
MALE' REPUBLIC OF MALDIVES

PROJECT TITLE

HULHUMALE' POLICE STATION
NEIGHBORHOOD - 1

RECOMMENDATION APPROVED BY
ISMAIL NAVEEN
CHIEF SUPERINTENDENT OF POLICE

DESIGN APPROVED BY
AZEEM WAHEED
CHIEF INSPECTOR OF POLICE

APPROVED BY
AHMED MOHAMED
CHIEF SUPERINTENDENT OF POLICE

ARCHITECT / DESIGNER
ISMAIL RAFEEU
POLICE STAFF SERGEANT

STRUCTURAL ENGINEER
RAMEEZ
ADEPT MALDIVES PVT LTD

DRAWN BY
ISMAIL RAFEEU
POLICE STAFF SERGEANT

CHECKED BY
ABDUL WAHID MOHAMED
ADEPT MALDIVES PVT LTD

DATE
15 - 02 - 2015

REVISED DATE

DRAWING NO
A 04

SHEET NO
04/26

ELECTRICAL LEGEND

MDB MAIN DISTRIBUTION BOARD
DB D-BOARD
CEILING RECESSED LIGHT
CEILING MOUNT LIGHT
2.3 WALL MOUNT LIGHT 2.3M
2.3 WALL MOUNT LIGHT 2.3M (DIM)
0.3 WALL MOUNT LIGHT 0.3M WEATHERPROOF
2.3 WALL MOUNT LIGHT 2.1M, WEATHERPROOF
CEILING MOUNT LIGHT, WEATHERPROOF
EMERGENCY LIGHT

CEILING FAN
WF WALL MOUNTED FAN
DIM LIGHT DIMER
FD FAN REGULATOR
1G ONE WAY SWITCH 1.2M (1GNG)
2G ONE WAY SWITCH 1.2M (2GNG)
3G ONE WAY SWITCH 1.2M (3GNG)
4G ONE WAY SWITCH 1.2M (4GNG)
2G TWO WAY SWITCH 1.2M (2GNG)
0.3 13A WALL SOCKET OUTLET 0.3m (SGL GNG)
1.2 13A WALL SOCKET OUTLET 1.2m (SGL GNG)
2.1 13A WALL SOCKET OUTLET 2.1m (SGL GNG)
0.3 13A WALL SOCKET OUTLET 0.3m (DBL GNG)

1.2 13A WALL SOCKET OUTLET 1.2m (DBL GNG)
2.1 13A WALL SOCKET OUTLET 2.1m (DBL GNG)
TELEPHONE SOCKET
NET NET WORK
TV CABLE TV
CCTV CAMERA
2x4' ceiling recessed tube light with prismatic cover

9000 9000 BTU with 15Amp Socket outlet
12000 12000 BTU with 15Amp Socket outlet
18000 18000 BTU with 15Amp Socket outlet
24000 24000 BTU with 15Amp Socket outlet

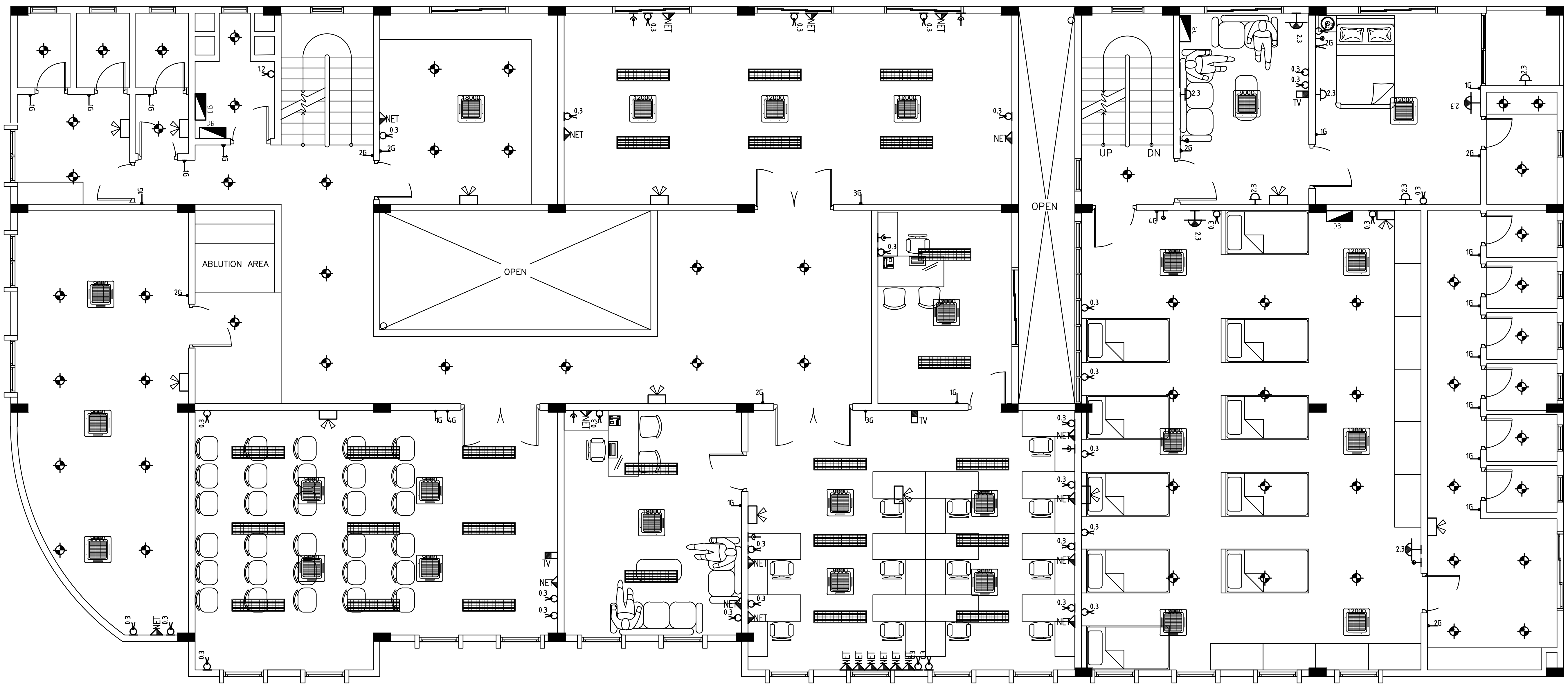

SECOND FLOOR PLAN

SCALE 1:100

INFRASTRUCTURE UNIT
FINANCE DEPARTMENT
MALDIVES POLICE SERVICE
MALE' REPUBLIC OF MALDIVES

PROJECT TITLE
HULHUMALE' POLICE STATION
NEIGHBORHOOD - 1

RECOMMENDATION APPROVED BY
ISMAIL NAVEEN
CHIEF SUPERINTENDENT OF POLICE

DESIGN APPROVED BY
AZEEM WAHEED
CHIEF INSPECTOR OF POLICE

APPROVED BY
AHMED MOHAMED
CHIEF SUPERINTENDENT OF POLICE

ARCHITECT / DESIGNER
ISMAIL RAFEEU
POLICE STAFF SERGEANT

STRUCTURAL ENGINEER
RAMEEZ
ADEPT MALDIVES PVT LTD

DRAWN BY
ISMAIL RAFEEU
POLICE STAFF SERGEANT

CHECKED BY
ABDUL WAHID MOHAMED
ADEPT MALDIVES PVT LTD

DATE
15 - 02 - 2015

REVISED DATE

DRAWING NO
A 05

SHEET NO
05/26

ELECTRICAL LEGEND

MDB	MAIN DISTRIBUTION BOARD
DB	D-BOARD
	CEILING RECESSED LIGHT
	CEILING MOUNT LIGHT
2.3	WALL MOUNT LIGHT 2.3M
2.3	WALL MOUNT LIGHT 2.3M (DIM)
0.3	WALL MOUNT LIGHT 0.3M WEATHERPROOF
2.3	WALL MOUNT LIGHT 2.1M, WEATHERPROOF
	CEILING MOUNT LIGHT, WEATHERPROOF
	EMERGENCY LIGHT
	CEILING FAN
WF	WALL MOUNTED FAN
	DIM LIGHT DIMER
FD	FAN REGULATOR
1G	ONE WAY SWITCH 1.2M (1GNG)
2G	ONE WAY SWITCH 1.2M (2GNG)
3G	ONE WAY SWITCH 1.2M (3GNG)
4G	ONE WAY SWITCH 1.2M (4GNG)
2G	TWO WAY SWITCH 1.2M (2GNG)
0.3	13A WALL SOCKET OUTLET 0.3m (SGL GNG)
1.2	13A WALL SOCKET OUTLET 1.2m (SGL GNG)
2.1	13A WALL SOCKET OUTLET 2.1m (SGL GNG)
0.3	13A WALL SOCKET OUTLET 0.3m (DBL GNG)
1.2	13A WALL SOCKET OUTLET 1.2m (DBL GNG)
2.1	13A WALL SOCKET OUTLET 2.1m (DBL GNG)
	TELEPHONE SOCKET
NET	NET WORK
TV	CABLE TV
	CCTV CAMERA
	2x4' ceiling recessed tube light with prismatic cover
9000	9000 BTU with 15Amp Socket outlet
12000	12000 BTU with 15Amp Socket outlet
18000	18000 BTU with 15Amp Socket outlet
24000	24000 BTU with 15Amp Socket outlet

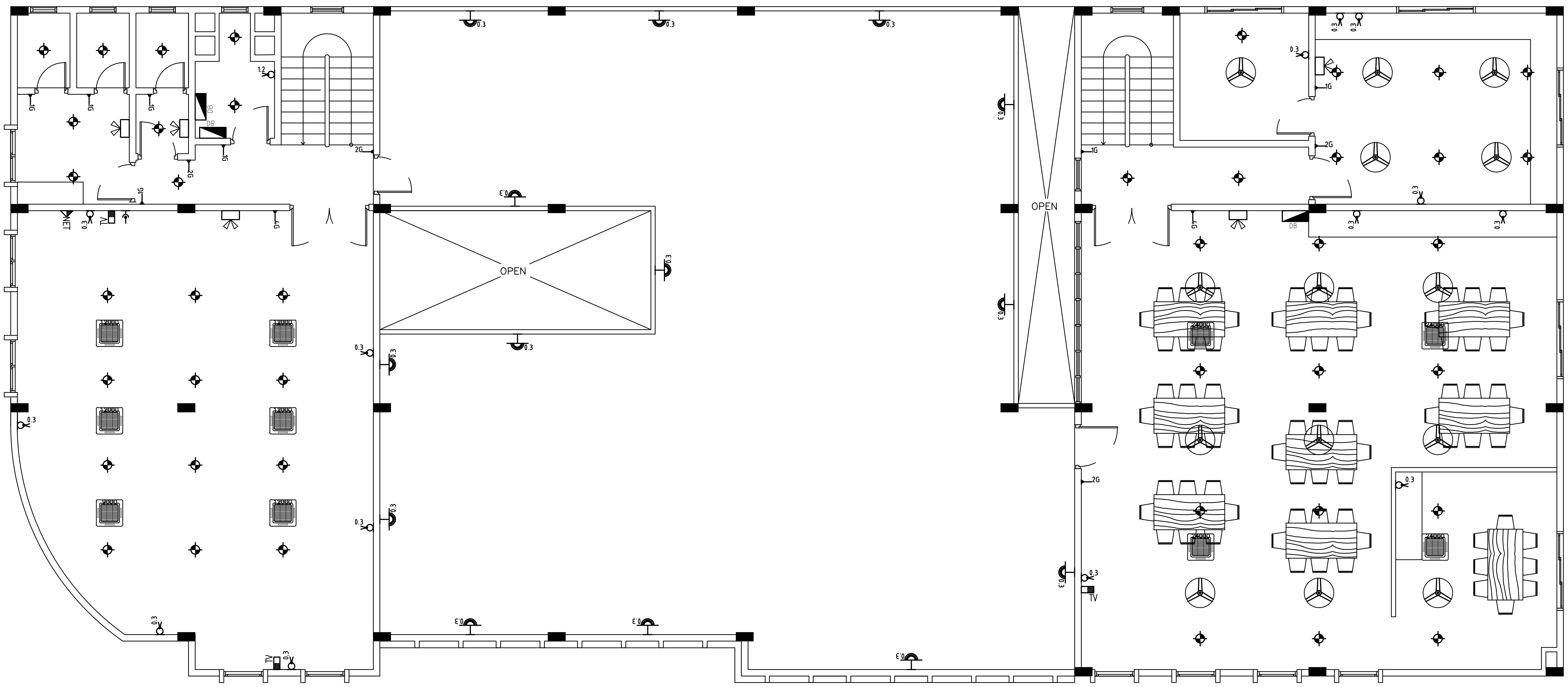

TERRACE FLOOR PLAN

SCALE 1:100

INFRASTRUCTURE UNIT
FINANCE DEPARTMENT
MALDIVES POLICE SERVICE
MALE' REPUBLIC OF MALDIVES

PROJECT TITLE
HULHUMALE' POLICE STATION NEIGHBORHOOD - 1

RECOMMENDATION APPROVED BY
ISMAIL NAVEEN
CHIEF SUPERINTENDENT OF POLICE

DESIGN APPROVED BY
AZEEM WAHEED
CHIEF INSPECTOR OF POLICE

APPROVED BY
AHMED MOHAMED
CHIEF SUPERINTENDENT OF POLICE

ARCHITECT / DESIGNER
ISMAIL RAFEEU
POLICE STAFF SERGEANT

DRAWN BY
ISMAIL RAFEEU
POLICE STAFF SERGEANT

STRUCTURAL ENGINEER
RAMEEZ
ADEPT MALDIVES PVT LTD

CHECKED BY
ABDUL WAHID MOHAMED
ADEPT MALDIVES PVT LTD

DATE
15 - 02 - 2015

REVISED DATE

DRAWING NO
A 06

SHEET NO
06/26

LEGEND

P	MOTOR PUMP
---⋈---	GATE VALVE
M	WATER METER
— — —	MWSC SUPPLY
— · — · —	GROUNDWATER SUPPLY
———	SEWAGE DISPOSAL
IC	INSPECTION CHAMBER

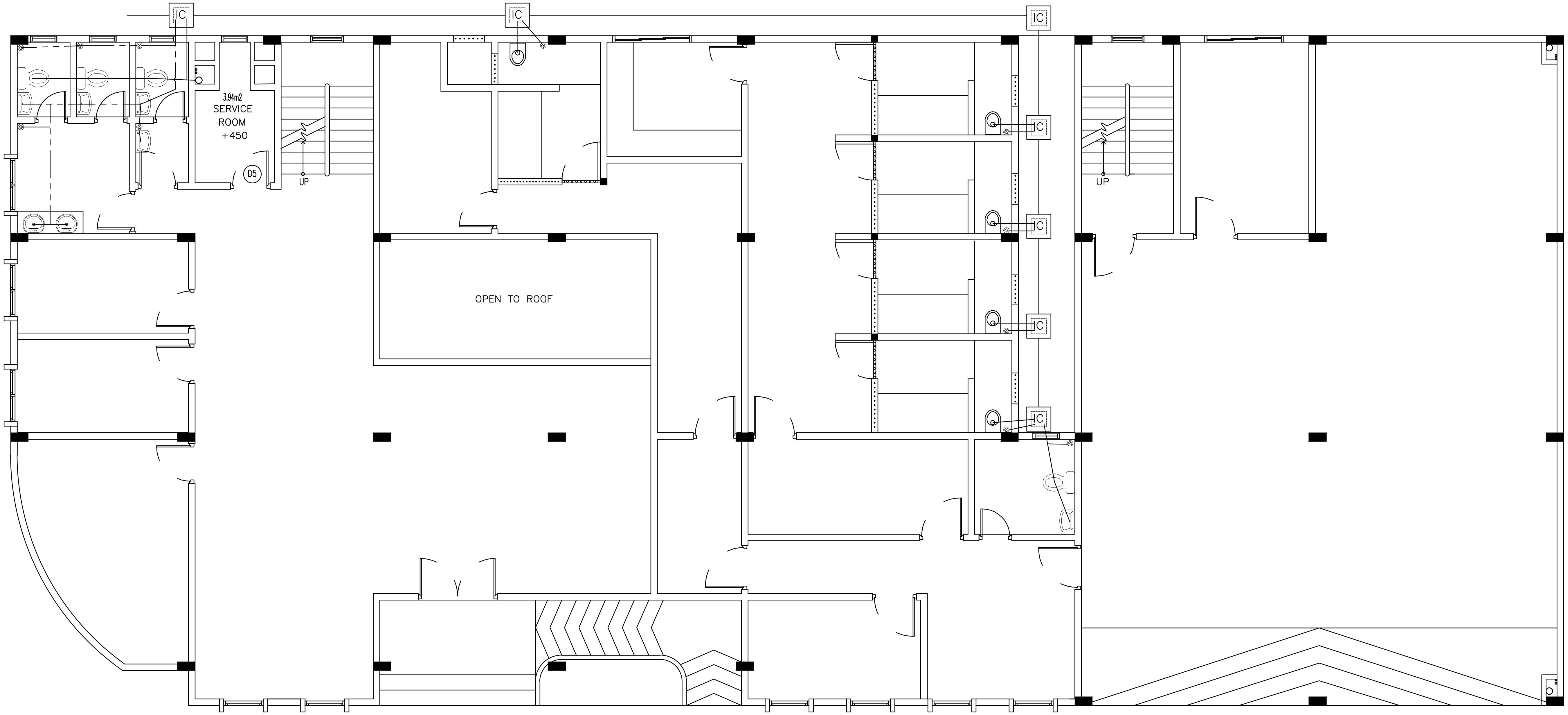

GROUND FLOOR PLAN

SCALE 1:100

INFRASTRUCTURE UNIT **FINANCE DEPARTMENT** **MALDIVES POLICE SERVICE** **MALE' REPUBLIC OF MALDIVES**	**PROJECT TITLE** **HULHUMALE' POLICE STATION NEIGHBORHOOD - 1**	RECOMMENDATION APPROVED BY **ISMAIL NAVEEN** CHIEF SUPERINTENDENT OF POLICE	DESIGN APPROVED BY **AZEEM WAHEED** CHIEF INSPECTOR OF POLICE	APPROVED BY **AHMED MOHAMED** CHIEF SUPERINTENDENT OF POLICE	ARCHITECT / DESIGNER **ISMAIL RAFEEU** POLICE STAFF SERGEANT	DRAWN BY **ISMAIL RAFEEU** POLICE STAFF SERGEANT	DATE **15 - 02 - 2015**	DRAWING NO **A 03**
					STRUCTURAL ENGINEER **RAMEEZ** ADEPT MALDIVES PVT LTD	CHECKED BY **ABDUL WAHID MOHAMED** ADEPT MALDIVES PVT LTD	REVISED DATE	SHEET NO **03/26**

LEGEND

P	MOTOR PUMP
---⋈---	GATE VALVE
Ⓜ _	WATER METER
— — —	MWSC SUPPLY
—·—	GROUNDWATER SUPPLY
———	SEWAGE DISPOSAL
IC	INSPECTION CHAMBER

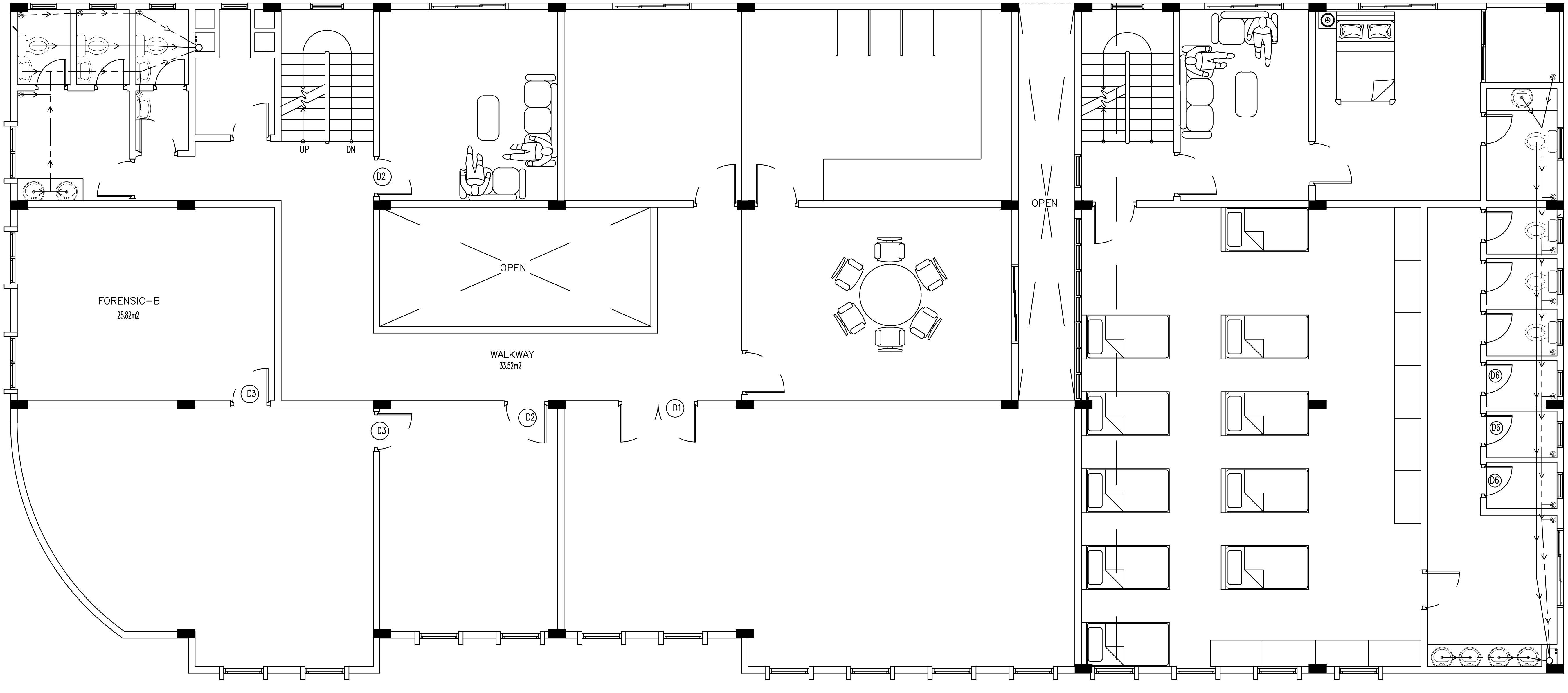

FIRST FLOOR PLAN

SCALE 1:100

INFRASTRUCTURE UNIT **FINANCE DEPARTMENT** **MALDIVES POLICE SERVICE** **MALE' REPUBLIC OF MALDIVES**	**PROJECT TITLE** **HULHUMALE' POLICE STATION NEIGHBORHOOD - 1**	RECOMMENDATION APPROVED BY **ISMAIL NAVEEN** CHIEF SUPERINTENDENT OF POLICE	DESIGN APPROVED BY **AZEEM WAHEED** CHIEF INSPECTOR OF POLICE	APPROVED BY **AHMED MOHAMED** CHIEF SUPERINTENDENT OF POLICE	ARCHITECT / DESIGNER **ISMAIL RAFEEU** POLICE STAFF SERGEANT	DRAWN BY **ISMAIL RAFEEU** POLICE STAFF SERGEANT	DATE **15 - 02 - 2015**	DRAWING NO **A 04**
					STRUCTURAL ENGINEER **RAMEEZ** ADEPT MALDIVES PVT LTD	CHECKED BY **ABDUL WAHID MOHAMED** ADEPT MALDIVES PVT LTD	REVISED DATE	SHEET NO **04/26**

LEGEND

MOTOR PUMP
GATE VALVE
WATER METER
MWSC SUPPLY
GROUNDWATER SUPPLY
SEWAGE DISPOSAL
INSPECTION CHAMBER

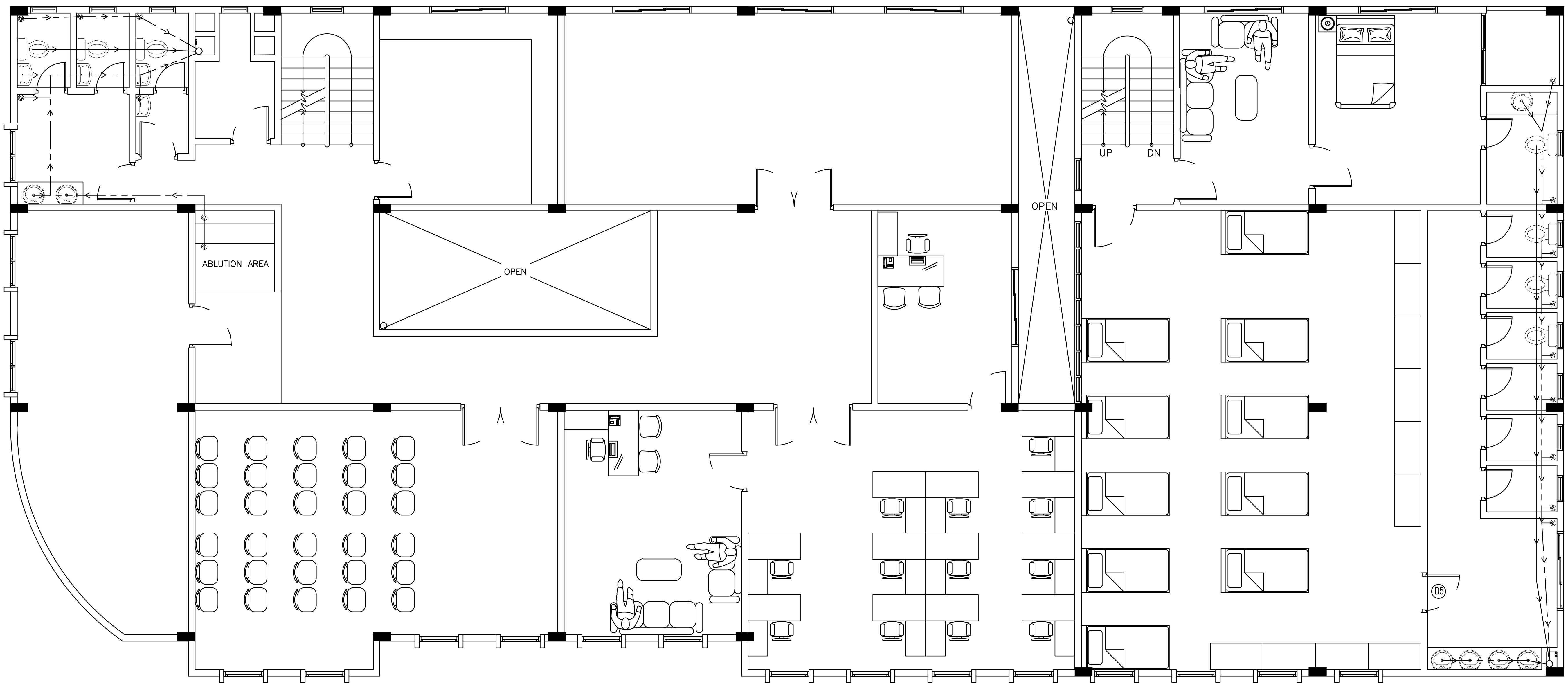

SECOND FLOOR PLAN

SCALE 1:100

INFRASTRUCTURE UNIT **FINANCE DEPARTMENT** **MALDIVES POLICE SERVICE** **MALE' REPUBLIC OF MALDIVES**	**PROJECT TITLE** **HULHUMALE' POLICE STATION NEIGHBORHOOD - 1**	RECOMMENDATION APPROVED BY **ISMAIL NAVEEN** CHIEF SUPERINTENDENT OF POLICE	DESIGN APPROVED BY **AZEEM WAHEED** CHIEF INSPECTOR OF POLICE	APPROVED BY **AHMED MOHAMED** CHIEF SUPERINTENDENT OF POLICE	ARCHITECT / DESIGNER **ISMAIL RAFEEU** POLICE STAFF SERGEANT	DRAWN BY **ISMAIL RAFEEU** POLICE STAFF SERGEANT	DATE **15 - 02 - 2015**
					STRUCTURAL ENGINEER **RAMEEZ** ADEPT MALDIVES PVT LTD	CHECKED BY **ABDUL WAHID MOHAMED** ADEPT MALDIVES PVT LTD	REVISED DATE

DRAWING NO

SHEET NO

LEGEND

- Ⓟ MOTOR PUMP
- ---⋈--- GATE VALVE
- Ⓜ _ WATER METER
- — — — MWSC SUPPLY
- — · — · — GROUNDWATER SUPPLY
- ——— SEWAGE DISPOSAL
- IC INSPECTION CHAMBER

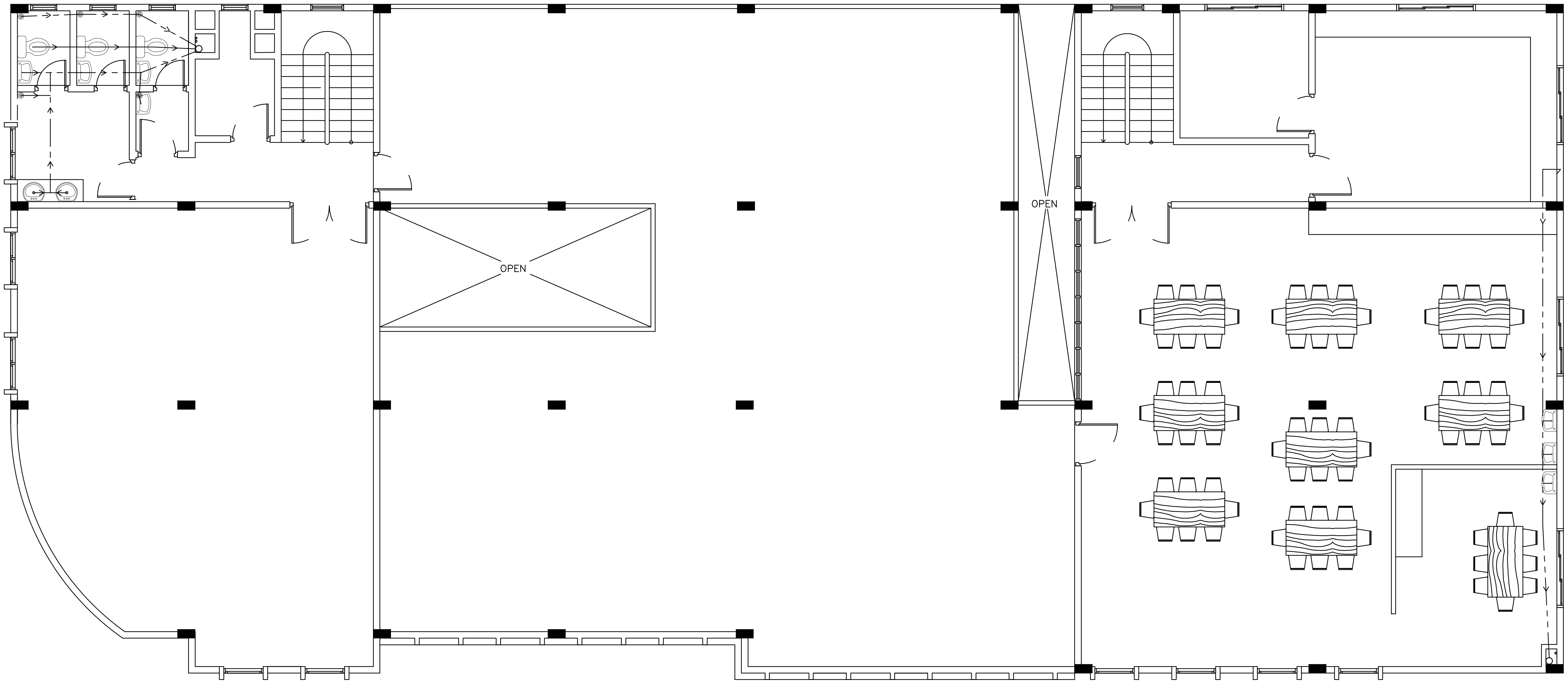

TERRACE FLOOR PLAN

SCALE 1:100

INFRASTRUCTURE UNIT
FINANCE DEPARTMENT
MALDIVES POLICE SERVICE
MALE' REPUBLIC OF MALDIVES

PROJECT TITLE
HULHUMALE' POLICE STATION
NEIGHBORHOOD - 1

RECOMMENDATION APPROVED BY
ISMAIL NAVEEN
CHIEF SUPERINTENDENT OF POLICE

DESIGN APPROVED BY
AZEEM WAHEED
CHIEF INSPECTOR OF POLICE

APPROVED BY
AHMED MOHAMED
CHIEF SUPERINTENDENT OF POLICE

ARCHITECT / DESIGNER
ISMAIL RAFEEU
POLICE STAFF SERGEANT

DRAWN BY
ISMAIL RAFEEU
POLICE STAFF SERGEANT

STRUCTURAL ENGINEER
RAMEEZ
ADEPT MALDIVES PVT LTD

CHECKED BY
ABDUL WAHID MOHAMED
ADEPT MALDIVES PVT LTD

DATE
15 - 02 - 2015

REVISED DATE

DRAWING NO

SHEET NO

LEGEND

- P MOTOR PUMP
- GATE VALVE
- M WATER METER
- MWSC SUPPLY
- GROUNDWATER SUPPLY
- SEWAGE DISPOSAL
- IC INSPECTION CHAMBER

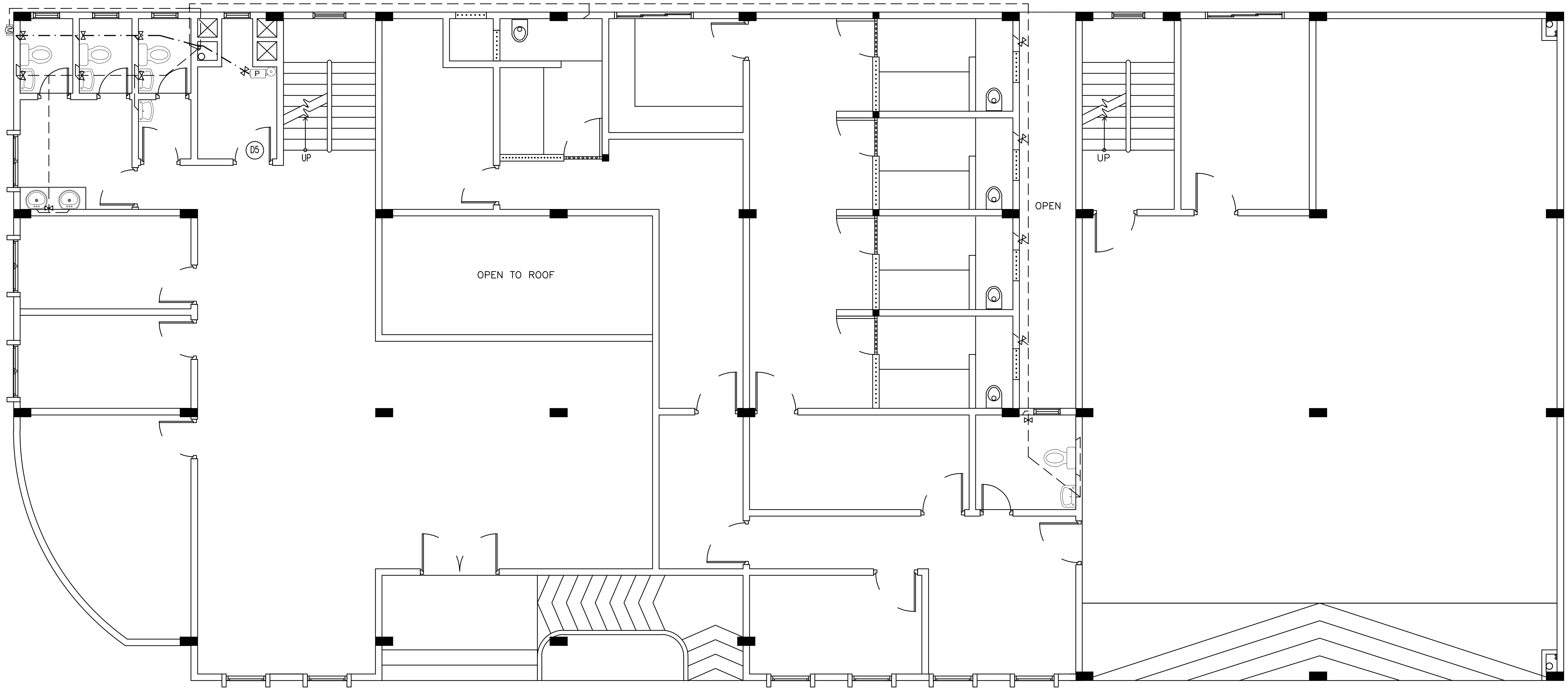

GROUND FLOOR PLAN

SCALE 1:100

INFRASTRUCTURE UNIT
FINANCE DEPARTMENT
MALDIVES POLICE SERVICE
MALE' REPUBLIC OF MALDIVES

PROJECT TITLE

HULHUMALE' POLICE STATION
NEIGHBORHOOD - 1

RECOMMENDATION APPROVED BY
ISMAIL NAVEEN
CHIEF SUPERINTENDENT OF POLICE

DESIGN APPROVED BY
AZEEM WAHEED
CHIEF INSPECTOR OF POLICE

APPROVED BY
AHMED MOHAMED
CHIEF SUPERINTENDENT OF POLICE

ARCHITECT / DESIGNER
ISMAIL RAFEEU
POLICE STAFF SERGEANT

STRUCTURAL ENGINEER
RAMEEZ
ADEPT MALDIVES PVT LTD

DRAWN BY
ISMAIL RAFEEU
POLICE STAFF SERGEANT

CHECKED BY
ABDUL WAHID MOHAMED
ADEPT MALDIVES PVT LTD

DATE
15 - 02 - 2015

REVISED DATE

DRAWING NO

SHEET NO

LEGEND

P MOTOR PUMP
GATE VALVE
M WATER METER
MWSC SUPPLY
GROUNDWATER SUPPLY
SEWAGE DISPOSAL
IC INSPECTION CHAMBER

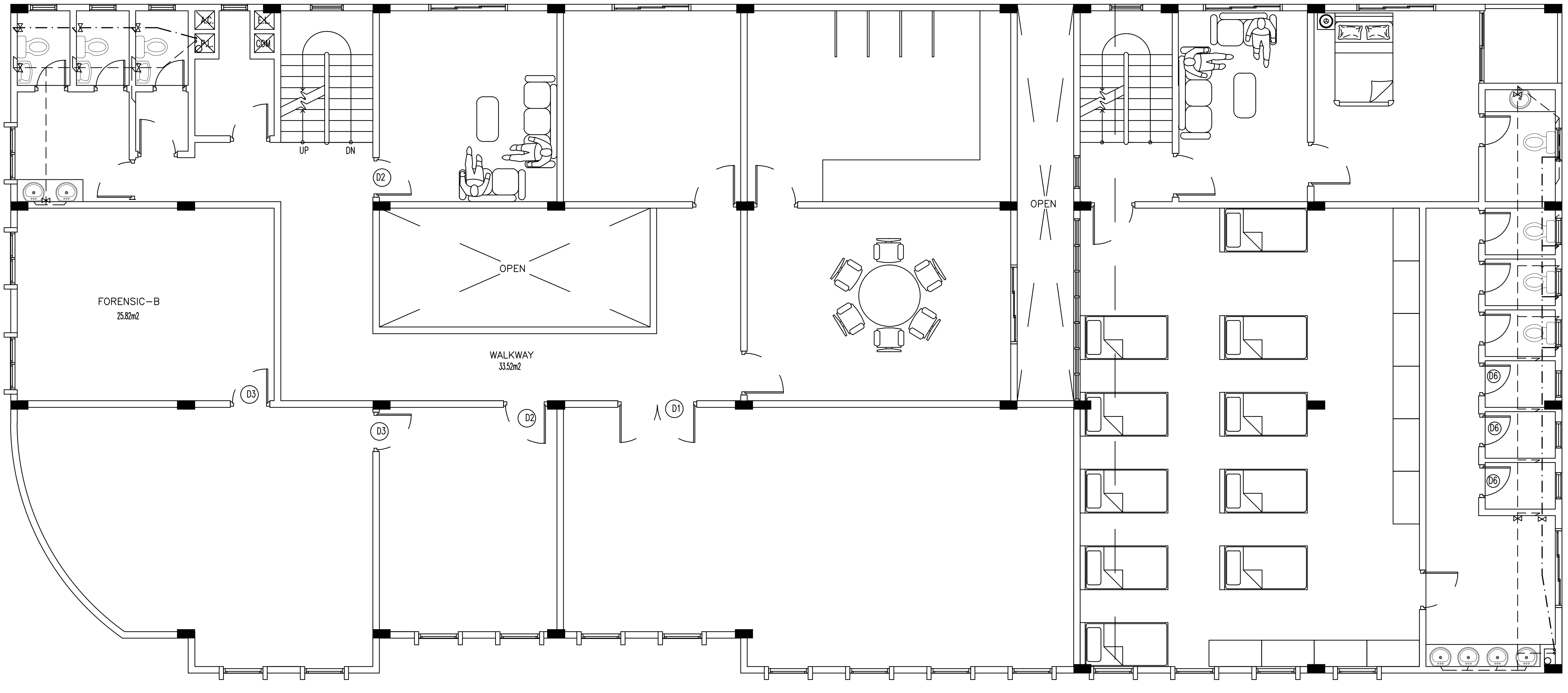

FIRST FLOOR PLAN

SCALE 1:100

INFRASTRUCTURE UNIT
FINANCE DEPARTMENT
MALDIVES POLICE SERVICE
MALE' REPUBLIC OF MALDIVES

PROJECT TITLE
HULHUMALE' POLICE STATION
NEIGHBORHOOD - 1

RECOMMENDATION APPROVED BY
ISMAIL NAVEEN
CHIEF SUPERINTENDENT OF POLICE

DESIGN APPROVED BY
AZEEM WAHEED
CHIEF INSPECTOR OF POLICE

APPROVED BY
AHMED MOHAMED
CHIEF SUPERINTENDENT OF POLICE

ARCHITECT / DESIGNER
ISMAIL RAFEEU
POLICE STAFF SERGEANT
STRUCTURAL ENGINEER
RAMEEZ
ADEPT MALDIVES PVT LTD

DRAWN BY
ISMAIL RAFEEU
POLICE STAFF SERGEANT
CHECKED BY
ABDUL WAHID MOHAMED
ADEPT MALDIVES PVT LTD

DATE
15 - 02 - 2015
REVISED DATE

DRAWING NO
SHEET NO

LEGEND

P	MOTOR PUMP
---⋈---	GATE VALVE
(M)	WATER METER
— — —	MWSC SUPPLY
—·—·—	GROUNDWATER SUPPLY
———	SEWAGE DISPOSAL
IC	INSPECTION CHAMBER

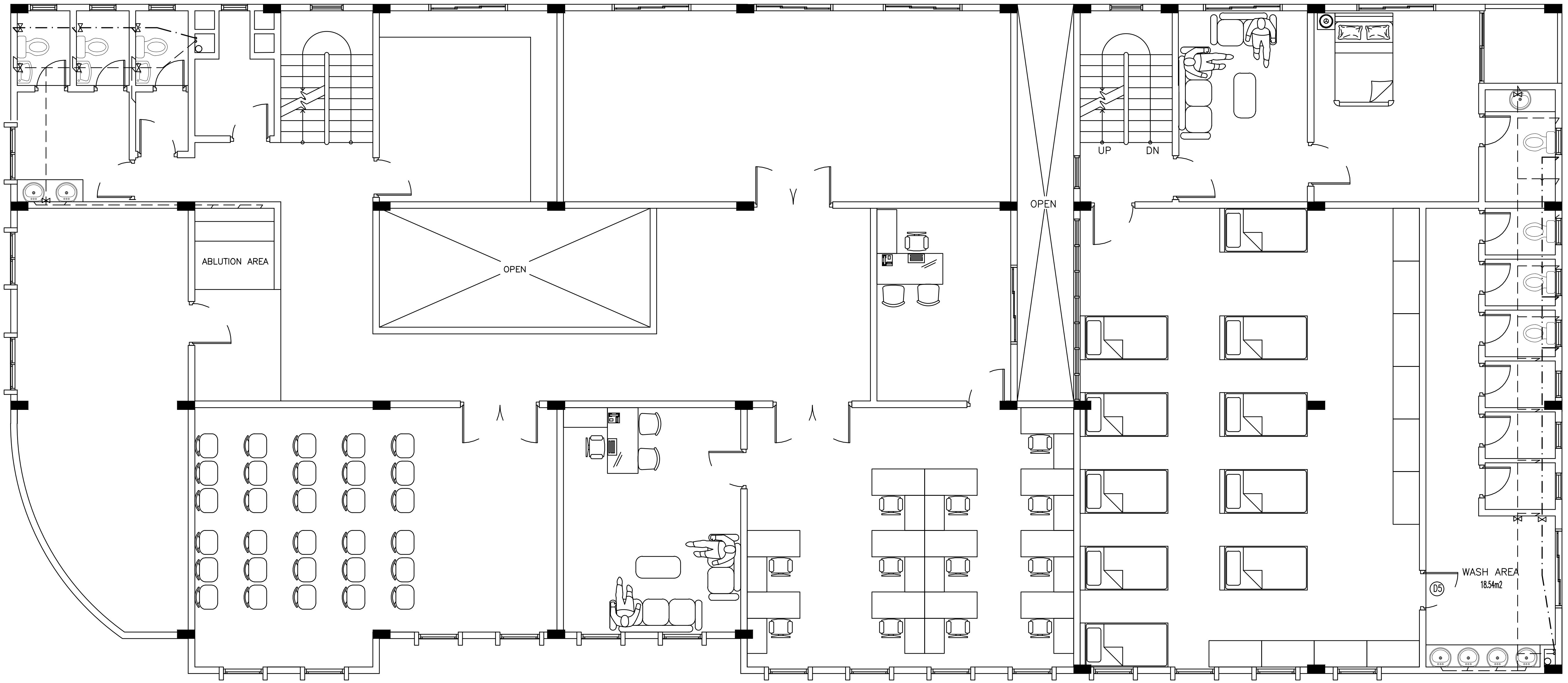

SECOND FLOOR PLAN

SCALE 1:100

INFRASTRUCTURE UNIT
FINANCE DEPARTMENT
MALDIVES POLICE SERVICE
MALE' REPUBLIC OF MALDIVES

PROJECT TITLE
HULHUMALE' POLICE STATION
NEIGHBORHOOD - 1

RECOMMENDATION APPROVED BY
ISMAIL NAVEEN
CHIEF SUPERINTENDENT OF POLICE

DESIGN APPROVED BY
AZEEM WAHEED
CHIEF INSPECTOR OF POLICE

APPROVED BY
AHMED MOHAMED
CHIEF SUPERINTENDENT OF POLICE

ARCHITECT / DESIGNER
ISMAIL RAFEEU
POLICE STAFF SERGEANT

DRAWN BY
ISMAIL RAFEEU
POLICE STAFF SERGEANT

STRUCTURAL ENGINEER
RAMEEZ
ADEPT MALDIVES PVT LTD

CHECKED BY
ABDUL WAHID MOHAMED
ADEPT MALDIVES PVT LTD

DATE
15 - 02 - 2015

REVISED DATE

DRAWING NO

SHEET NO

LEGEND

P	MOTOR PUMP
---⋈---	GATE VALVE
Ⓜ _	WATER METER
— — —	MWSC SUPPLY
—·—·—	GROUNDWATER SUPPLY
———	SEWAGE DISPOSAL
IC	INSPECTION CHAMBER

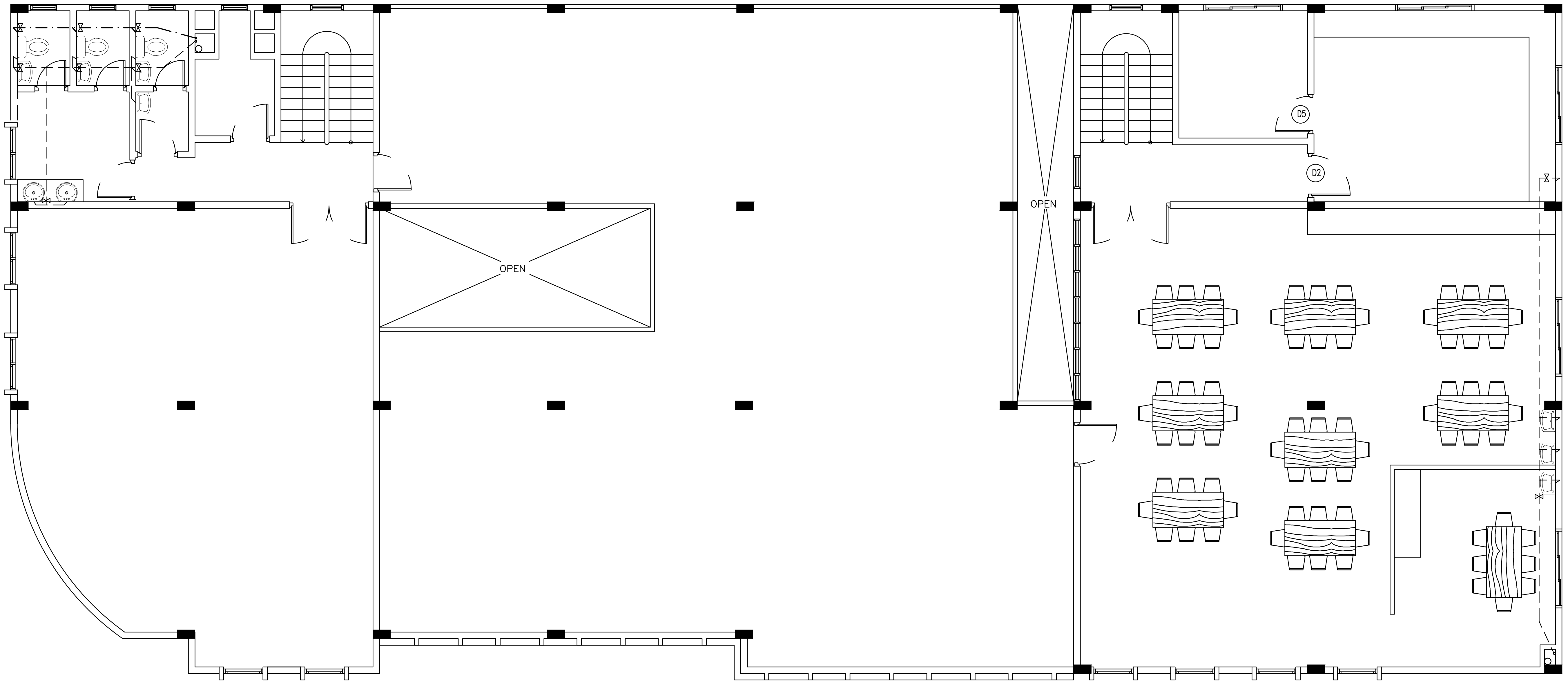

TERRACE FLOOR PLAN

SCALE 1:100

INFRASTRUCTURE UNIT
FINANCE DEPARTMENT
MALDIVES POLICE SERVICE
MALE' REPUBLIC OF MALDIVES

PROJECT TITLE
HULHUMALE' POLICE STATION
NEIGHBORHOOD - 1

RECOMMENDATION APPROVED BY
ISMAIL NAVEEN
CHIEF SUPERINTENDENT OF POLICE

DESIGN APPROVED BY
AZEEM WAHEED
CHIEF INSPECTOR OF POLICE

APPROVED BY
AHMED MOHAMED
CHIEF SUPERINTENDENT OF POLICE

ARCHITECT / DESIGNER
ISMAIL RAFEEU
POLICE STAFF SERGEANT

DRAWN BY
ISMAIL RAFEEU
POLICE STAFF SERGEANT

STRUCTURAL ENGINEER
RAMEEZ
ADEPT MALDIVES PVT LTD

CHECKED BY
ABDUL WAHID MOHAMED
ADEPT MALDIVES PVT LTD

DATE
15 - 02 - 2015

REVISED DATE

DRAWING NO

SHEET NO

The drawings, concept and design contained are the properties of Maldives Police Service. Use of any kind of copy of whole or part of this drawing, concept or design or use on other projects or sites other than that specified on this drawing is strictly prohibited.