IF IN DOUBT - ASK - DO NOT SCALE

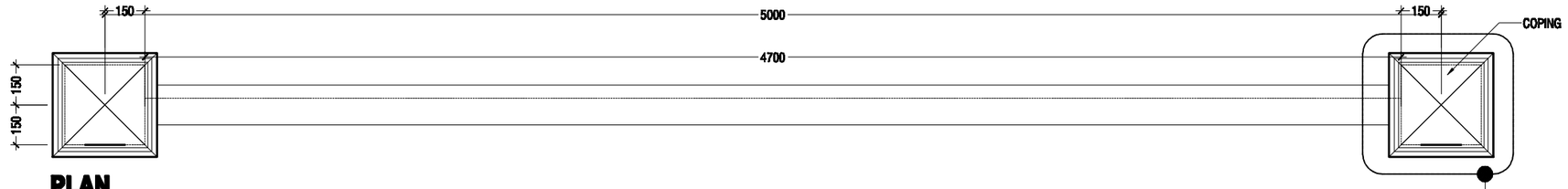

PLAN

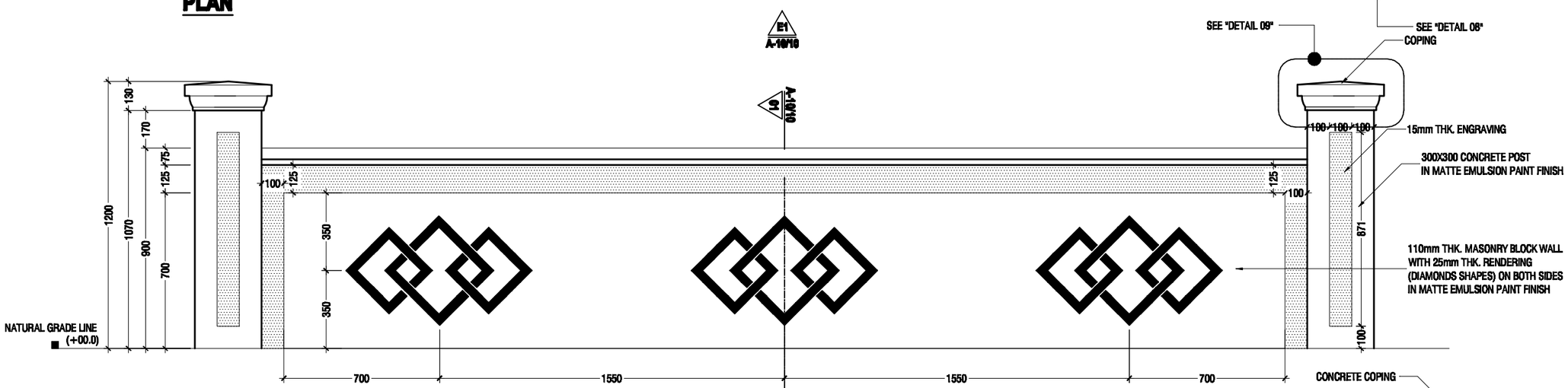

ELEVATION E1

SCALE 1:20

0 0.1 0.2 0.4 0.6 0.8 1

15mm THK. ENGRAVED PORTIONS

20mm THK. EMBOSSED PORTIONS

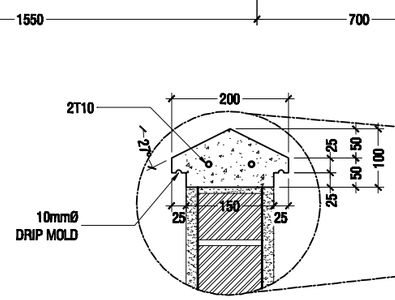

BLOW-UP DETAIL

SCALE 1:10

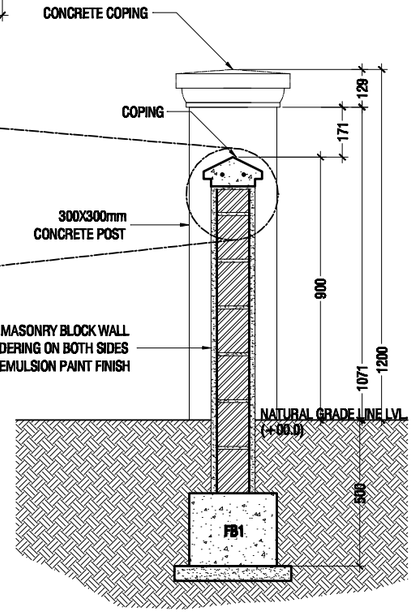

SECTION 01

SCALE 1:20

0 0.1 0.2 0.4 0.6 0.8 1

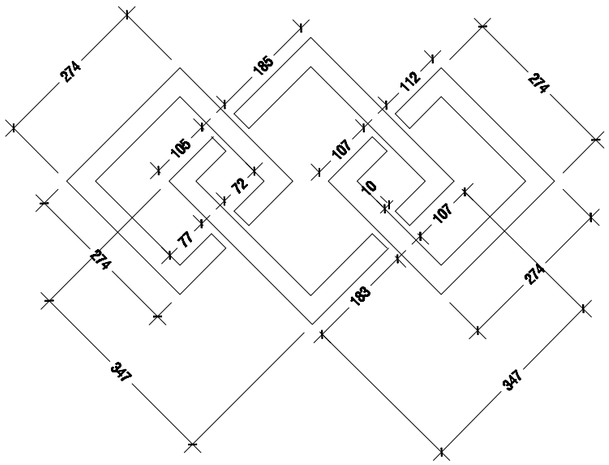

DECORATIVE DIAMOND DETAIL

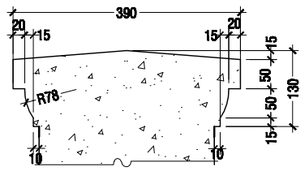

DETAILS 09

SCALE 1:10

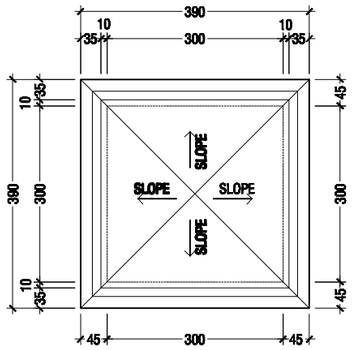

DETAILS 08

SCALE 1:10

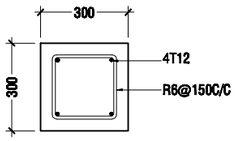

C1*

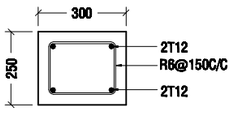

FB*

FOUNDATION DEPTH -500.0 MM
all are FB

BOUNDARY WALL DETAILS

SCALE 1:20

0 0.1 0.2 0.4 0.6 0.8 1

PROJECT :

F.DHARABOODHOO MOSQUE (304 PAX)

INFRASTRUCTURE DEVELOPMENT SECTION

MINISTRY OF ISLAMIC AFFAIRS