IF IN DOUBT - ASK - DO NOT SCALE

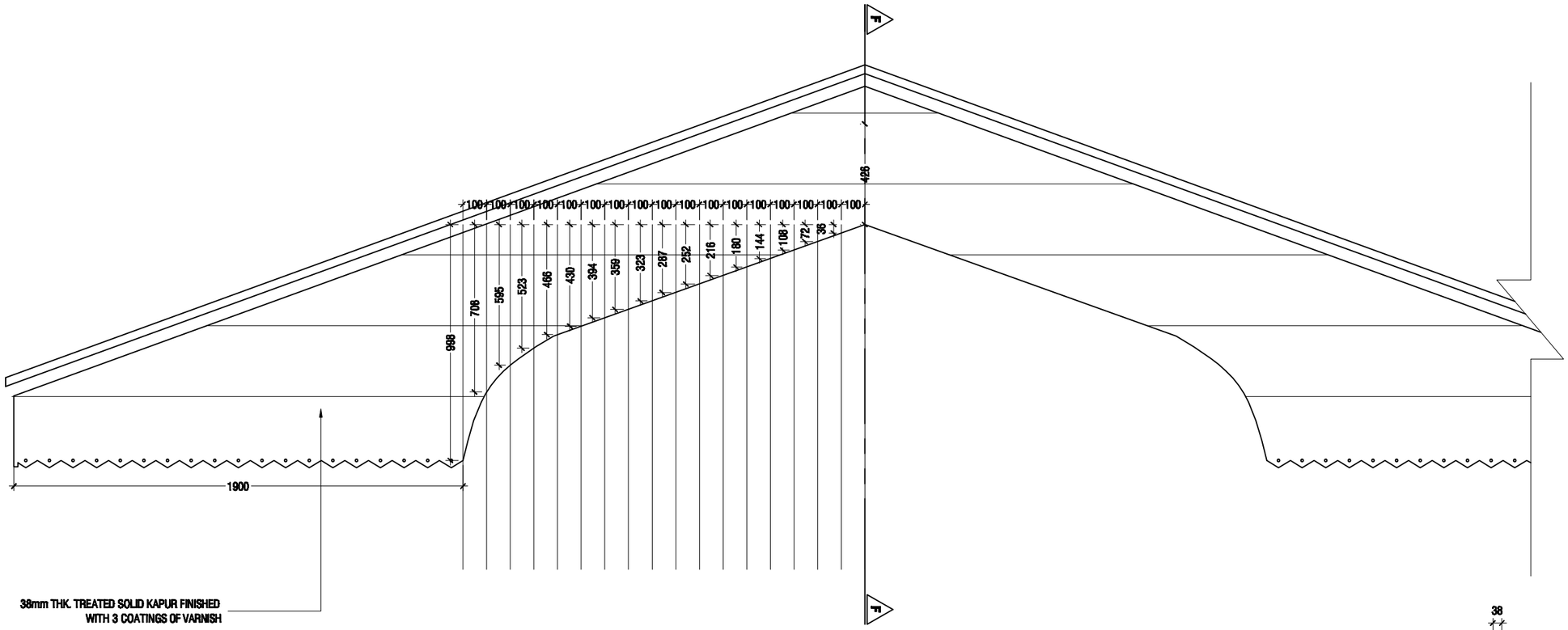

DETAIL F

SCALE 1:20

0 0.1 0.2 0.4 0.6 0.8 1

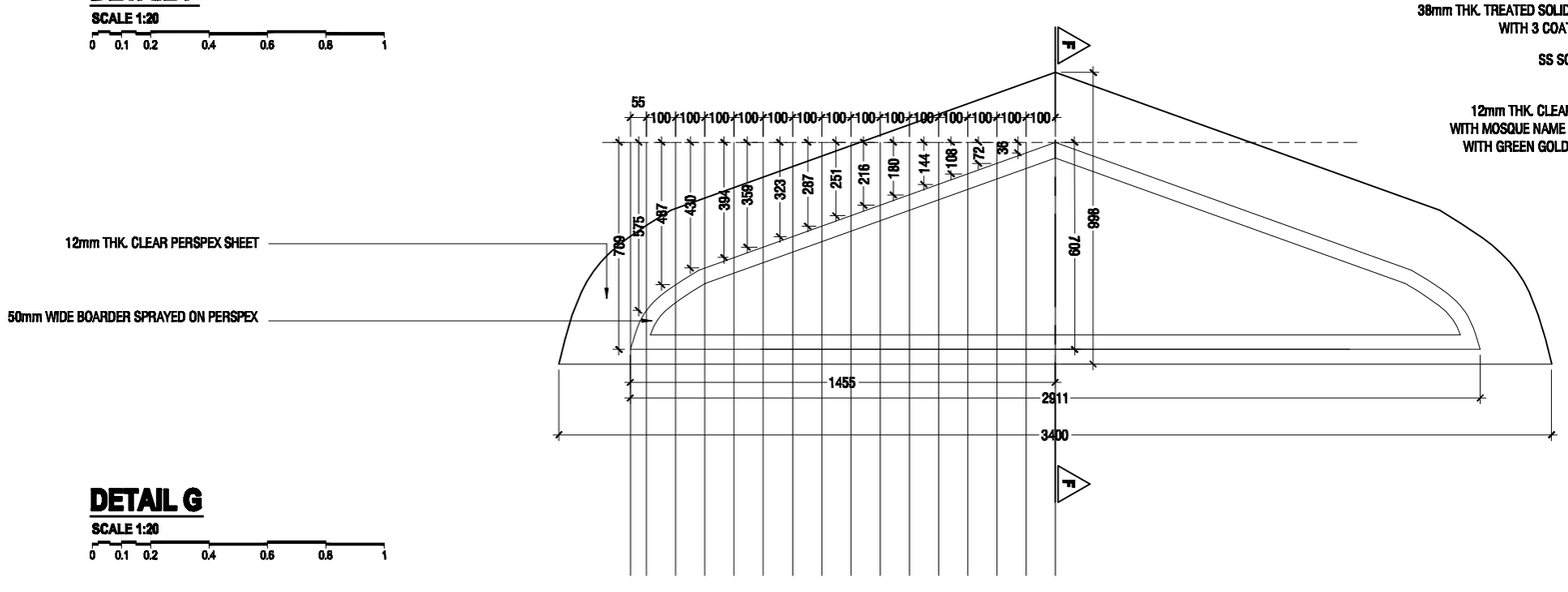

DETAIL G

SCALE 1:20

0 0.1 0.2 0.4 0.6 0.8 1

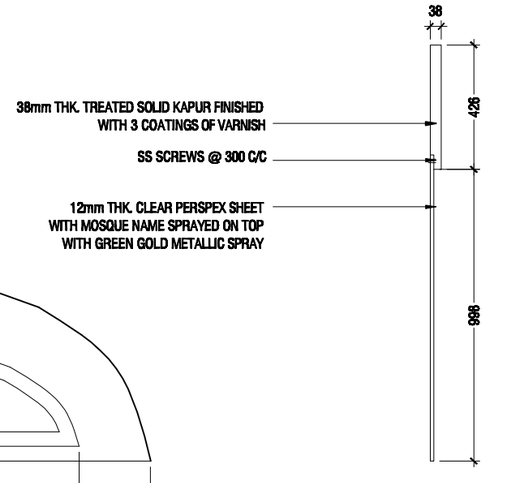

SECTION F-F

PROJECT :

F.DHARABOODHOO MOSQUE (304 PAX)

INFRASTRUCTURE DEVELOPMENT SECTION

MINISTRY OF ISLAMIC AFFAIRS