Construction of
Island Waste Management Center

V. KEYODHOO

Ministry of Environment, Climate Change and Technology
Green Building, Handhuvareehigun
Rep of Maldives

KOCKS INGENIEURE
KOCKS CONSULT GMBH
Stegemannstr. 32-38
Tel: +49 261 1302-400
Email: info@kocks-ing.de

WS
WATER SOLUTIONS PVT LTD
4th FL, M. Niadhurumaage
Tel: +960 3341643
Email: info@water-solutions.biz

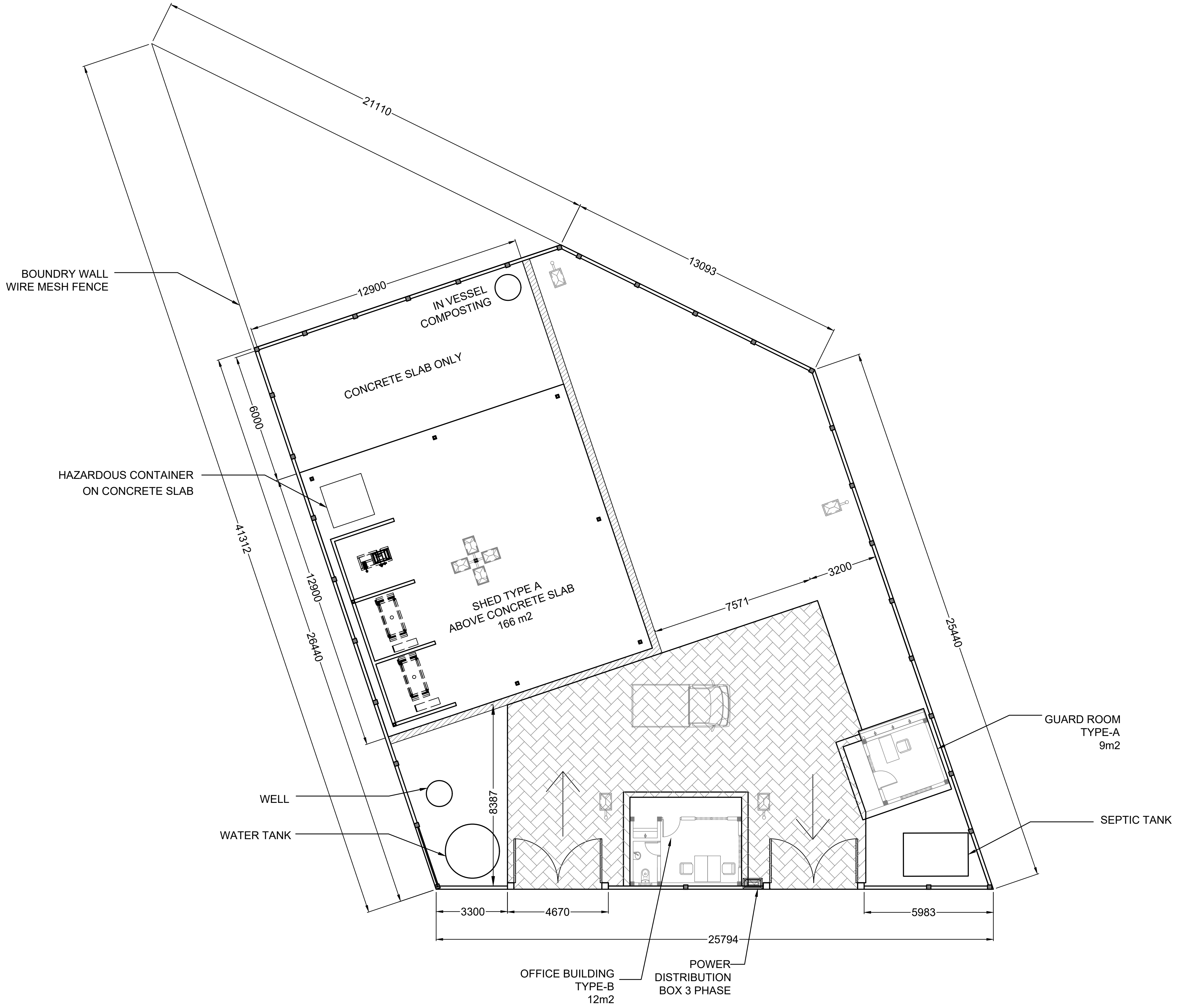
21110
13093
BOUNDRY WALL
WIRE MESH FENCE
12900
IN VESSEL
COMPOSTING
CONCRETE SLAB ONLY
6000
HAZARDOUS CONTAINER
ON CONCRETE SLAB
41312
12900
26440
SHED TYPE A
ABOVE CONCRETE SLAB
166 m2
7571
3200
25440
GUARD ROOM
TYPE-A
9m2
WELL
WATER TANK
8387
SEPTIC TANK
3300
4670
5983
25794
OFFICE BUILDING
TYPE-B
12m2
POWER
DISTRIBUTION
BOX 3 PHASE

SITE LAYOUT - V. KEYODHOO

1:200

Ministry of Environment, Climate
Change and Technology
Green Building, Handhuvareehigun
Rep of Maldives

KOCKS INGENIEURE
KOCKS CONSULT GMBH
Stegemannstr. 32-38
Tel: +49 261 1302-400
Email: info@kocks-ing.de

WS
WATER SOLUTIONS PVT LTD
4th FL, M. Niadhurumaage
Tel: +960 3341643
Email: info@water-solutions.biz

Project Title

Construction of Island Waste
Management Centers
V. Keyodhoo

Site Layout

DESIGNED	KASDARLI
DRAFTED	JALEEL
CHECKED	KASDARLI
PROJECT#	213-98616

AMMENDMENTS

DESIGN

Scale	Paper
AS GIVEN	A3

Drawing No.

1

Construction of
Island Waste Management Center

GENERAL COMPONENTS DETAILS

Ministry of Environment, Climate Change and Technology
Green Building, Handhuvareehigun
Rep of Maldives

KOCKS CONSULT GMBH
Stegemannstr. 32-38
Tel: +49 261 1302-400
Email: info@kocks-ing.de

WATER SOLUTIONS PVT LTD
4th FL, M. Niadhurumaage
Tel: +960 3341643
Email: info@water-solutions.biz

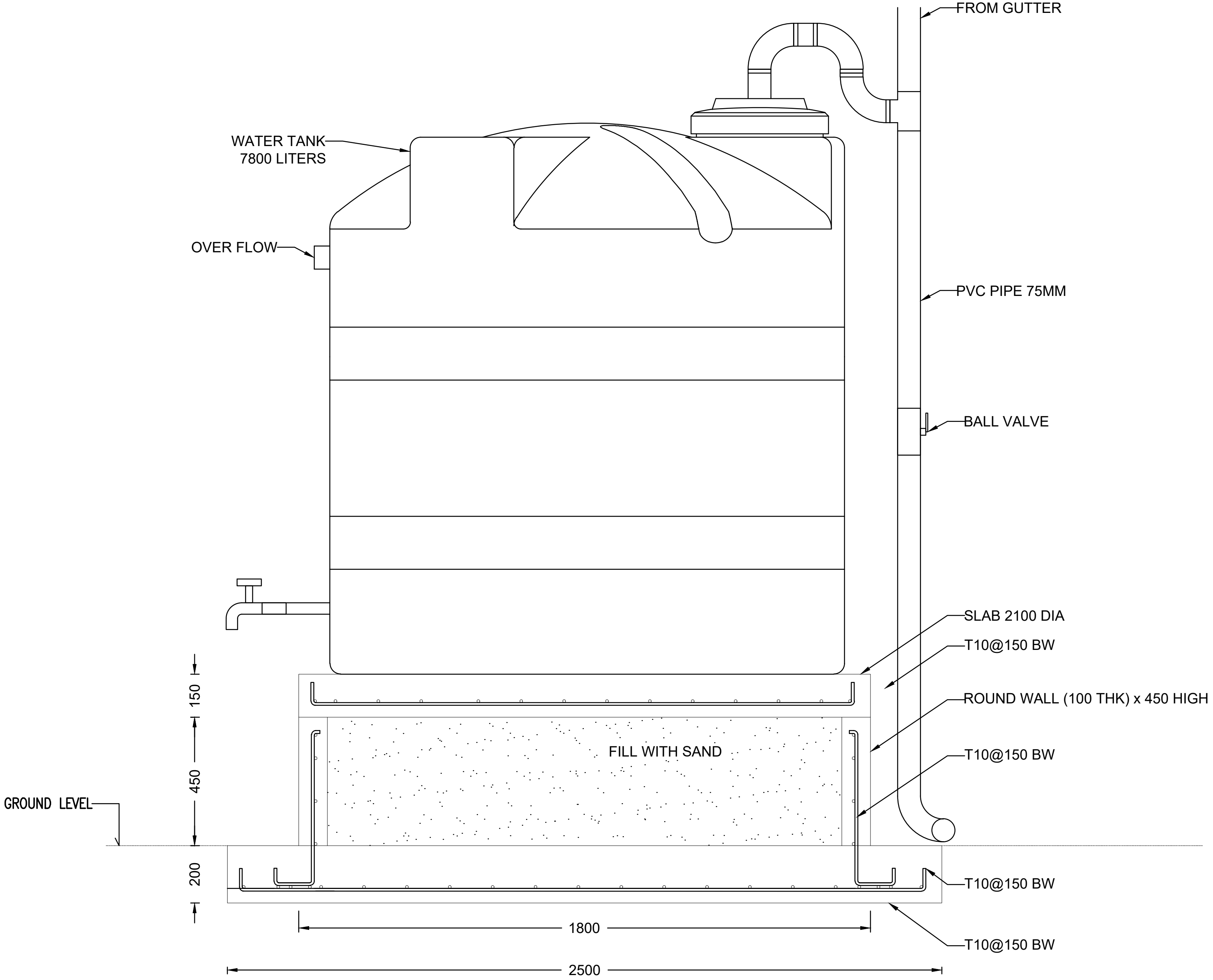
FROM GUTTER
WATER TANK
7800 LITERS
OVER FLOW
PVC PIPE 75MM
BALL VALVE
SLAB 2100 DIA
T10@150 BW
ROUND WALL (100 THK) x 450 HIGH
FILL WITH SAND
T10@150 BW
GROUND LEVEL
150
450
200
T10@150 BW
T10@150 BW
1800
2500

WATER TANK FOUNDATION

1:20

Ministry of Environment, Climate Change and Technology
Green Building, Handhuvareehigun
Rep of Maldives

KOCKS INGENIEURE
KOCKS CONSULT GMBH
Stegemannstr. 32-38
Tel: +49 261 1302-400
Email: info@kocks-ing.de

WS
WATER SOLUTIONS PVT LTD
4th FL, M. Niadhurumaage
Tel: +960 3341643
Email: info@water-solutions.biz

Construction of Island Waste Management Centers

GENERAL COMPONENTS DETAILS
WATER TANK

DESIGNED	KASDARLI
DRAFTED	JALEEL
CHECKED	FAYAZ
PROJECT#	213-98616

AMMENDMENTS

DESIGN

Scale	Paper
AS GIVEN	A4

Drawing No.
1

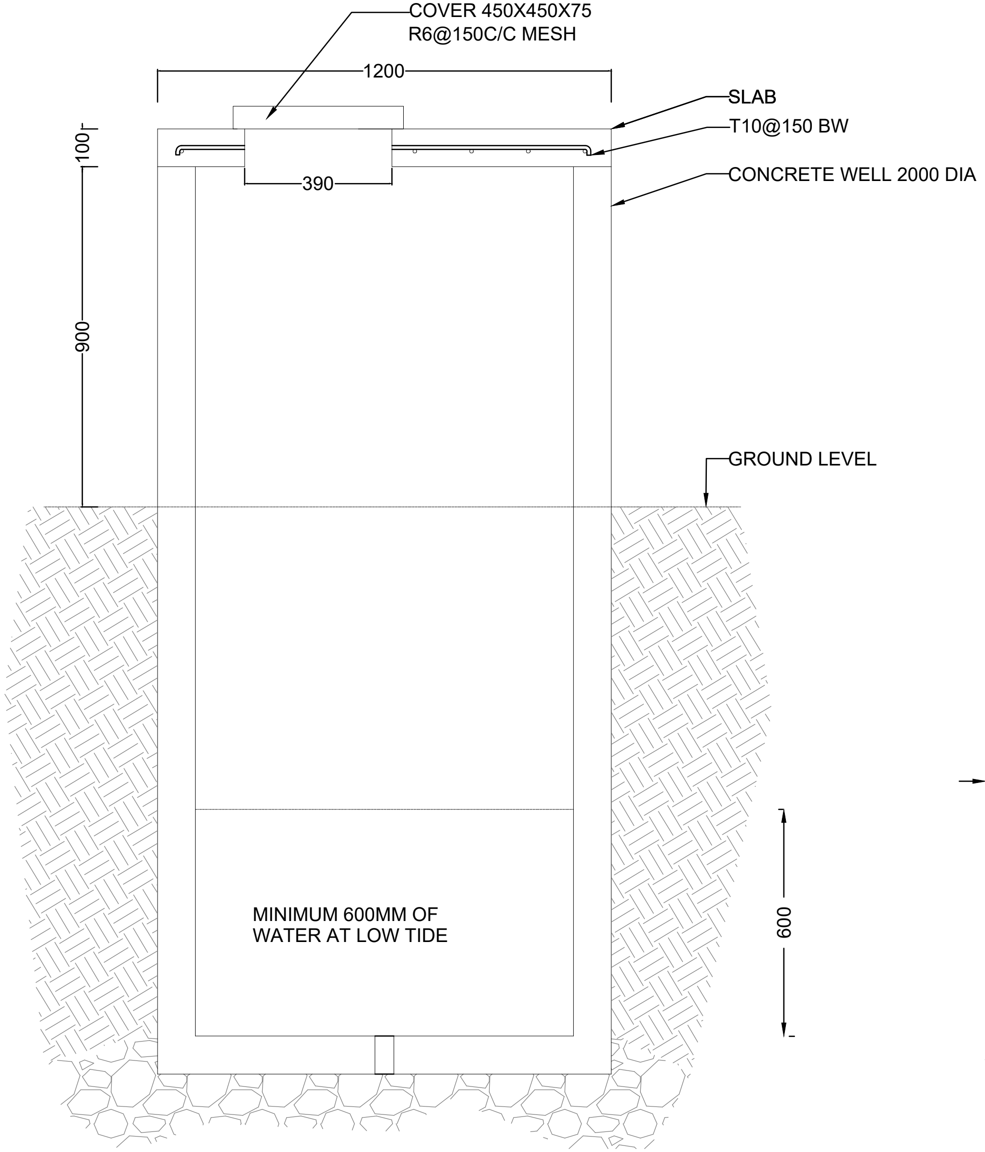
COVER 450X450X75
R6@150C/C MESH
1200
SLAB
T10@150 BW
CONCRETE WELL 2000 DIA
100
390
900
GROUND LEVEL
MINIMUM 600MM OF WATER AT LOW TIDE
600

WELL SECTION

1:20

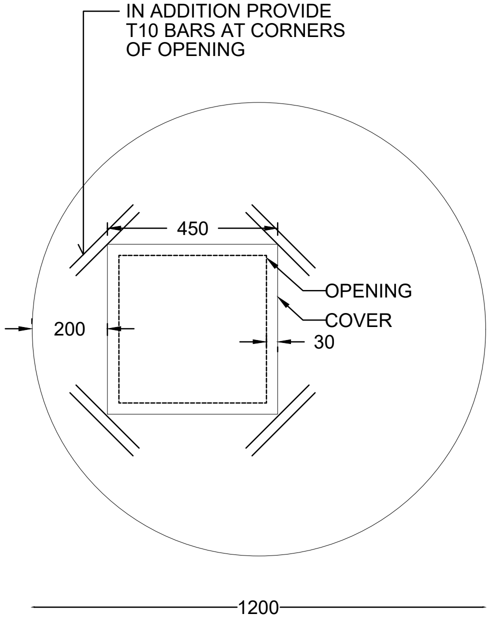
IN ADDITION PROVIDE T10 BARS AT CORNERS OF OPENING
450
OPENING
COVER
200
30
1200

WELL PLAN

1:20

Ministry of Environment, Climate Change and Technology
Green Building, Handhuvareehigun
Rep of Maldives

KOCKS INGENIEURE
KOCKS CONSULT GMBH
Stegemannstr. 32-38
Tel: +49 261 1302-400
Email: info@kocks-ing.de

WS
WATER SOLUTIONS PVT LTD
4th FL, M. Niadhurumaage
Tel: +960 3341643
Email: info@water-solutions.biz

Construction of Island Waste Management Centers

GENERAL COMPONENTS DETAILS
WELL

DESIGNED	KASDARLI
DRAFTED	JALEEL
CHECKED	FAYAZ
PROJECT#	213-98616

AMMENDMENTS

DESIGN

Scale	Paper
AS GIVEN	A4

Drawing No.

2

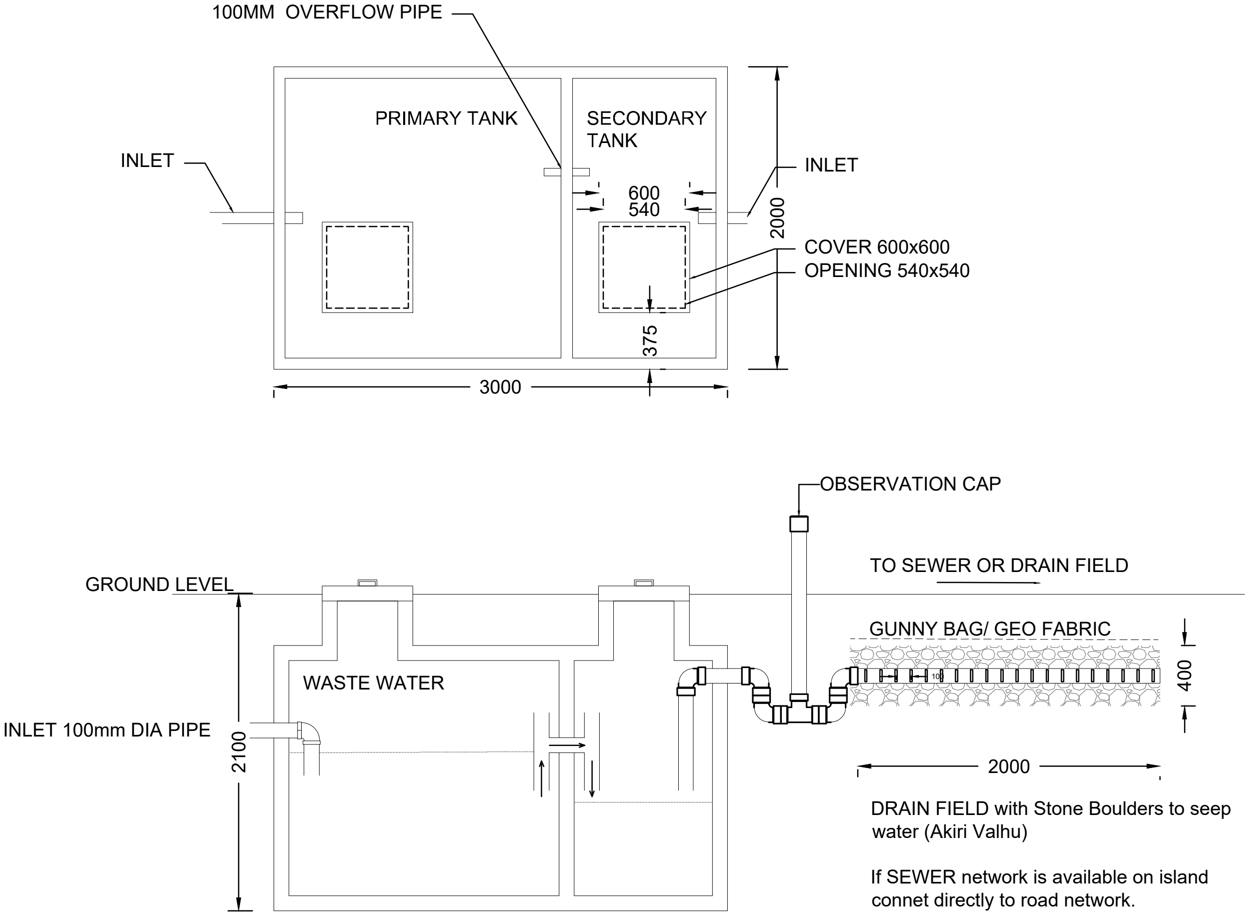
100MM OVERFLOW PIPE
PRIMARY TANK
SECONDARY TANK
INLET
INLET
600
540
2000
COVER 600x600
OPENING 540x540
375
3000
OBSERVATION CAP
TO SEWER OR DRAIN FIELD
GROUND LEVEL
GUNNY BAG/ GEO FABRIC
WASTE WATER
400
INLET 100mm DIA PIPE
2100
2000

DRAIN FIELD with Stone Boulders to seep water (Akiri Valhu)

If SEWER network is available on island connet directly to road network.

SEPTIC TANK

1:50

Ministry of Environment, Climate Change and Technology
Green Building, Handhuvareehigun
Rep of Maldives

KOCKS CONSULT GMBH
Stegemannstr. 32-38
Tel: +49 261 1302-400
Email: info@kocks-ing.de

WATER SOLUTIONS PVT LTD
4th FL, M. Niadhurumaage
Tel: +960 3341643
Email: info@water-solutions.biz

Construction of Island Waste Management Centers

GENERAL COMPONENTS DETAILS
SEPTIC TANK

DESIGNED	KASDARLI
DRAFTED	JALEEL
CHECKED	FAYAZ
PROJECT#	213-98616

AMMENDMENTS

DESIGN

Scale	Paper
AS GIVEN	A4

Drawing No.
3

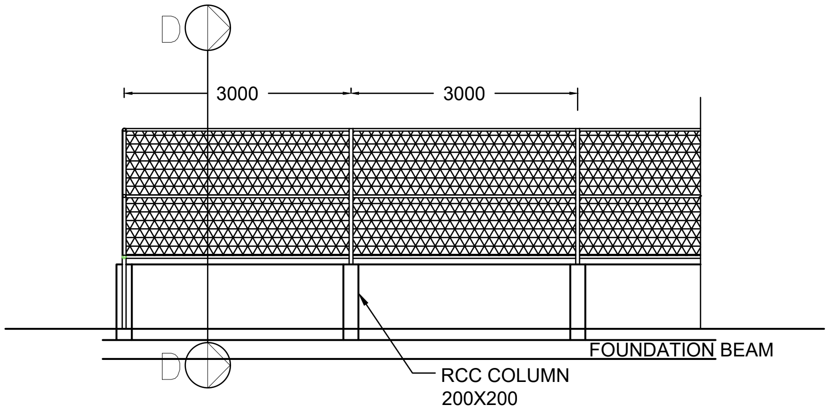
D
3000
3000
FOUNDATION BEAM
RCC COLUMN
200X200
D

GI PIPE & WIRE MESH FENCE

1:100

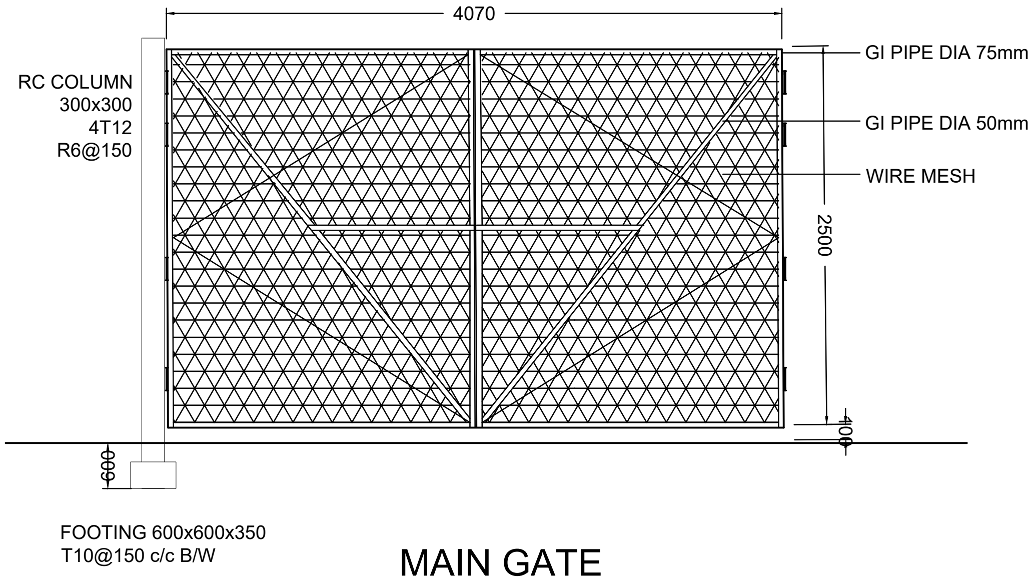
4070
RC COLUMN
300x300
4T12
R6@150
GI PIPE DIA 75mm
GI PIPE DIA 50mm
WIRE MESH
2500
400
600
FOOTING 600x600x350
T10@150 c/c B/W

MAIN GATE

1:50

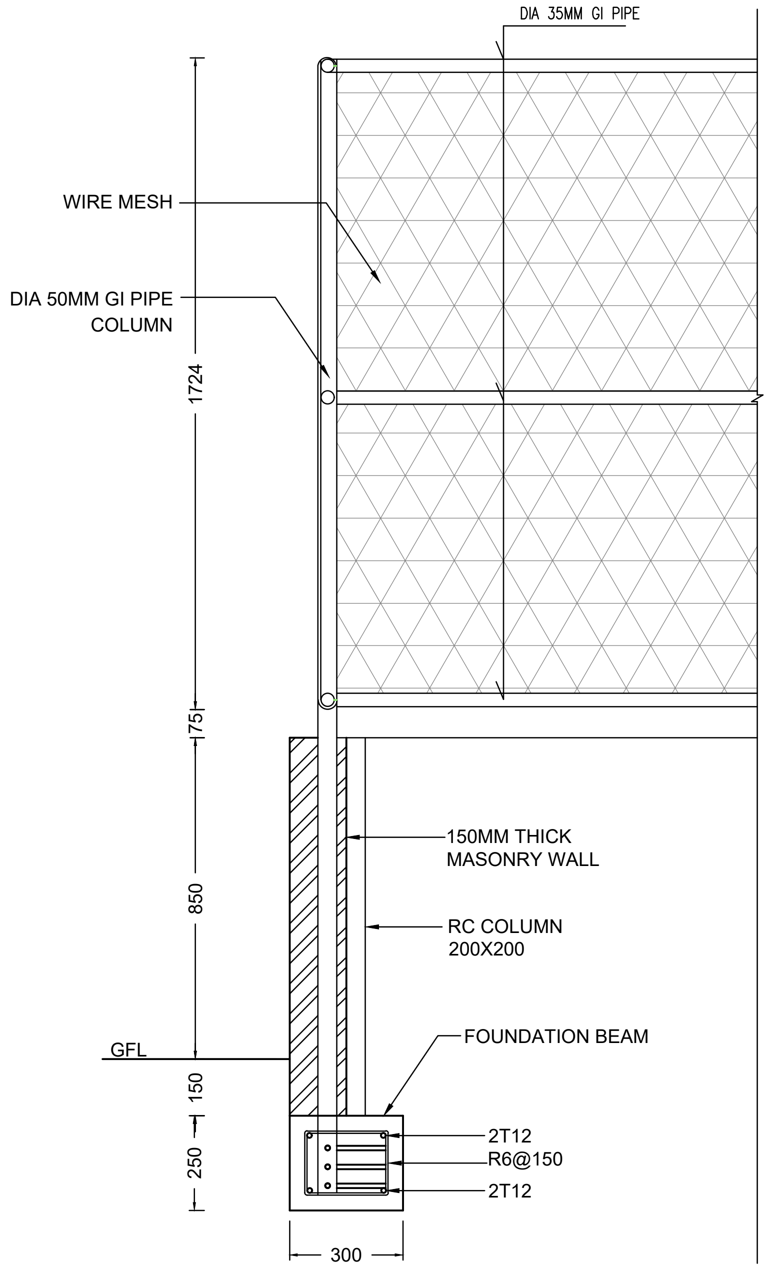
DIA 35MM GI PIPE
WIRE MESH
DIA 50MM GI PIPE
COLUMN
1724
175
850
150
250
150MM THICK
MASONRY WALL
RC COLUMN
200X200
FOUNDATION BEAM
GFL
2T12
R6@150
2T12
300

SECTION D-D

1:20

Ministry of Environment, Climate
Change and Technology
Green Building, Handhuvareehigun
Rep of Maldives

KOCKS CONSULT GMBH
Stegemannstr. 32-38
Tel: +49 261 1302-400
Email: info@kocks-ing.de

WATER SOLUTIONS PVT LTD
4th FL, M. Niadhurumaage
Tel: +960 3341643
Email: info@water-solutions.biz

Construction of Island Waste
Management Centers

GENERAL COMPONENTS DETAILS
FENCE & GATE

DESIGNED	KASDARLI
DRAFTED	JALEEL
CHECKED	FAYAZ
PROJECT#	213-98616

AMMENDMENTS

DESIGN

Scale	Paper
AS GIVEN	A4

Drawing No.

4

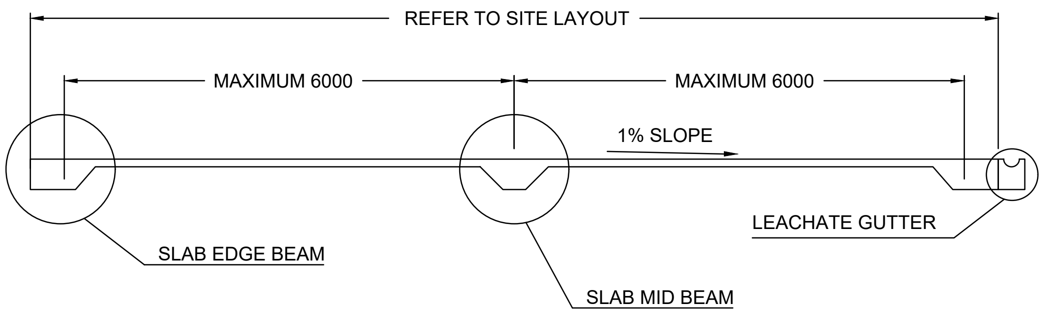
REFER TO SITE LAYOUT
MAXIMUM 6000
MAXIMUM 6000
1% SLOPE
LEACHATE GUTTER
SLAB EDGE BEAM
SLAB MID BEAM

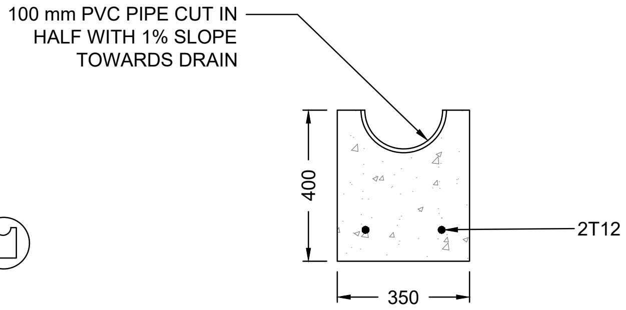
100 mm PVC PIPE CUT IN HALF WITH 1% SLOPE TOWARDS DRAIN
400
2T12
350

LEACHATE GUTTER DETAILS

1:20

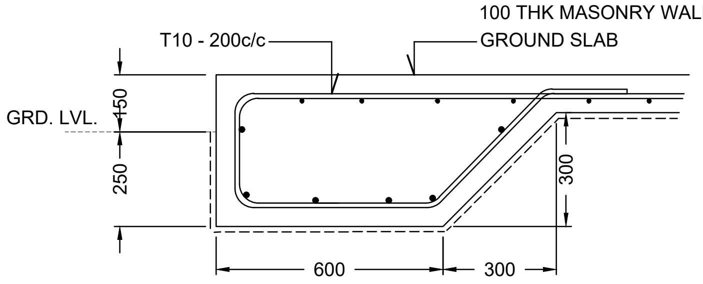
T10 - 200c/c
100 THK MASONRY WALL
GROUND SLAB
GRD. LVL.
150
250
300
600
300

SLAB EDGE BEAM

1:20

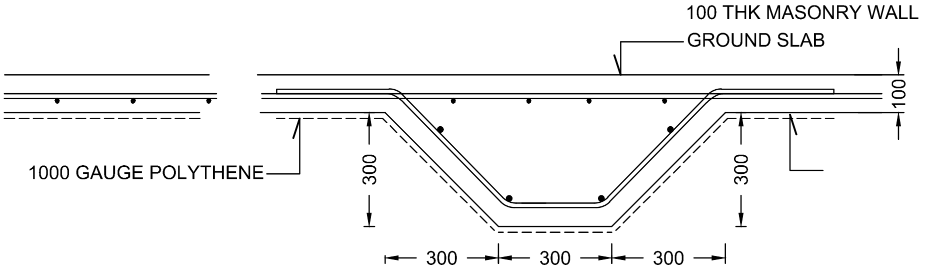
100 THK MASONRY WALL
GROUND SLAB
100
1000 GAUGE POLYTHENE
300
300
300
300
300

SLAB MID BEAM

1:20

NOTE: For office and guardroom floor, refer to SECTION-S
Cover 50mm

CONCRETE SLAB DETAILS - Shed, Hazardous waste & Slab only areas

1:20

Ministry of Environment, Climate Change and Technology
Green Building, Handhuvareehigun
Rep of Maldives

KOCKS CONSULT GMBH
Stegemannstr. 32-38
Tel: +49 261 1302-400
Email: info@kocks-ing.de

WATER SOLUTIONS PVT LTD
4th FL, M. Niadhurumaage
Tel: +960 3341643
Email: info@water-solutions.biz

Construction of Island Waste Management Centers

GENERAL COMPONENTS DETAILS
TYPICAL FLOOR SLAB

DESIGNED	KASDARLI
DRAFTED	JALEEL
CHECKED	FAYAZ
PROJECT#	213-98616

AMMENDMENTS

DESIGN

Scale AS GIVEN	Paper A4

Drawing No.
5

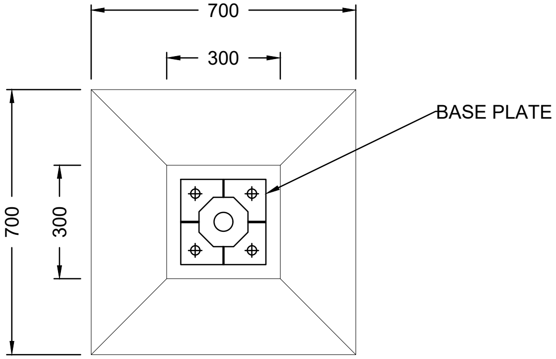
700
300
BASE PLATE
700
300

PLAN

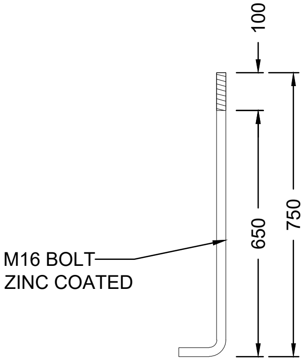
100
M16 BOLT
ZINC COATED
650
750

BOLT

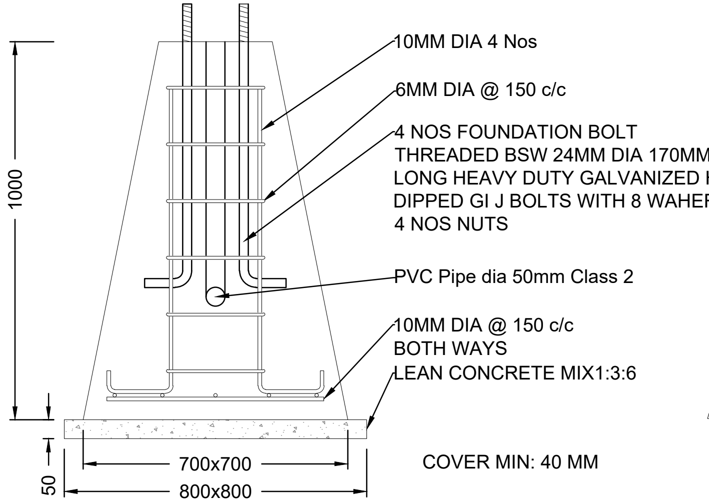
10MM DIA 4 Nos
6MM DIA @ 150 c/c
4 NOS FOUNDATION BOLT
THREADED BSW 24MM DIA 170MM
LONG HEAVY DUTY GALVANIZED HOT
DIPPED GI J BOLTS WITH 8 WAHER AND
4 NOS NUTS
PVC Pipe dia 50mm Class 2
10MM DIA @ 150 c/c
BOTH WAYS
LEAN CONCRETE MIX1:3:6
1000
50
700x700
800x800

COVER MIN: 40 MM

SIDE ELEVATION

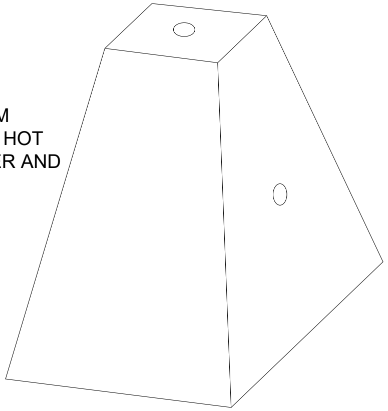

ISOMETRIC VIEW

LIGHT FOOTING

1:20

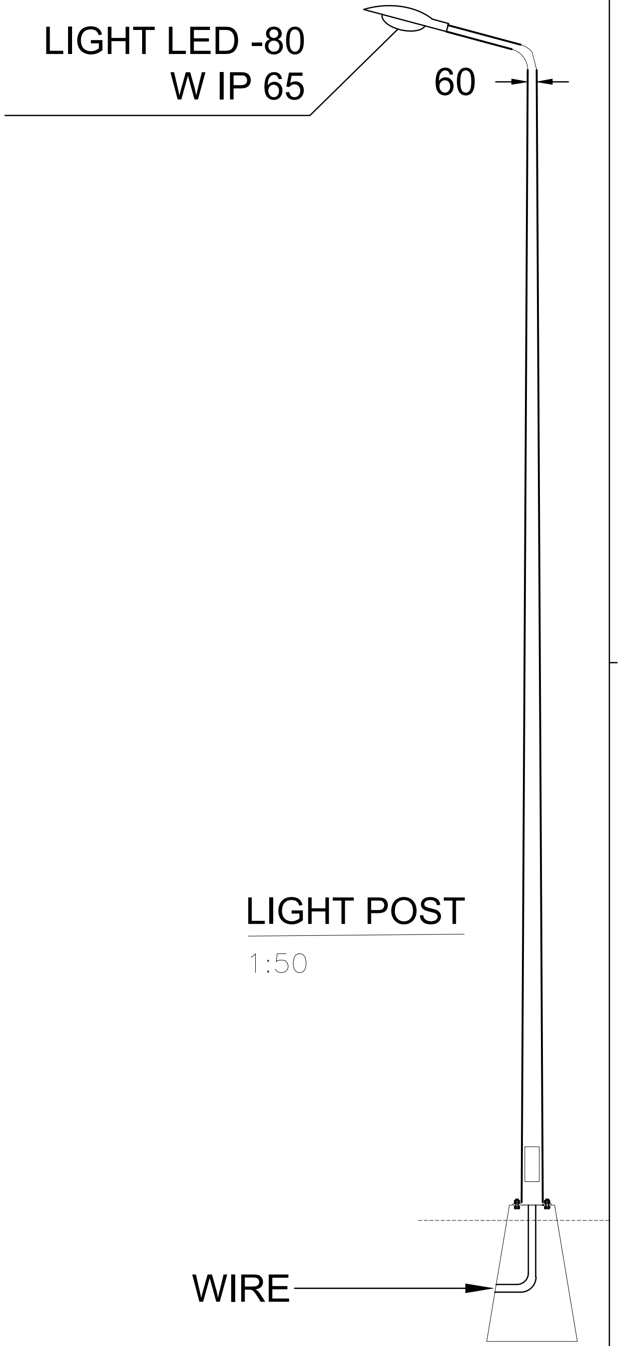
LIGHT LED -80
W IP 65
60
WIRE

LIGHT POST

1:50

Ministry of Environment, Climate Change and Technology
Green Building, Handhuvareehigun
Rep of Maldives

KOCKS INGENIEURE
KOCKS CONSULT GMBH
Stegemannstr. 32-38
Tel: +49 261 1302-400
Email: info@kocks-ing.de

WS
WATER SOLUTIONS PVT LTD
4th FL, M. Niadhurumaage
Tel: +960 3341643
Email: info@water-solutions.biz

Construction of Island Waste Management Centers

GENERAL COMPONENTS DETAILS
LIGHT POST

DESIGNED	KASDARLI
DRAFTED	JALEEL
CHECKED	FAYAZ
PROJECT#	213-98616

AMMENDMENTS

DESIGN

Scale	Paper
AS GIVEN	A4

Drawing No.
6

Construction of
Island Waste Management Center

GUARD ROOM TYPE-A

Ministry of Environment, Climate Change and Technology
Green Building, Handhuvareehigun
Rep of Maldives

KOCKS INGENIEURE
KOCKS CONSULT GMBH
Stegemannstr. 32-38
Tel: +49 261 1302-400
Email: info@kocks-ing.de

WS
WATER SOLUTIONS PVT LTD
4th FL, M. Niadhurumaage
Tel: +960 3341643
Email: info@water-solutions.biz

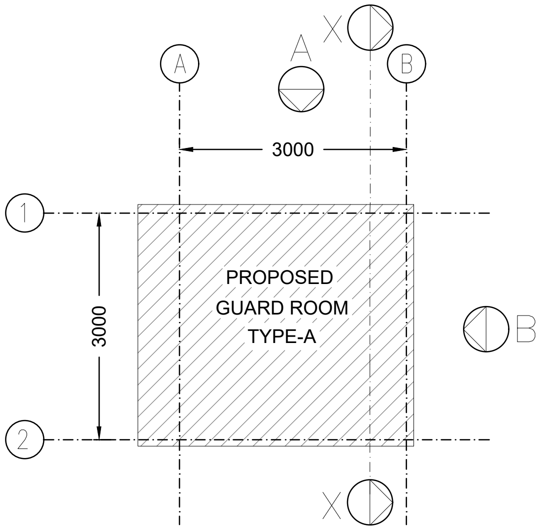
A
X
A
B
3000
1
2
3000
PROPOSED
GUARD ROOM
TYPE-A
B
X

SITE PLAN

1:100

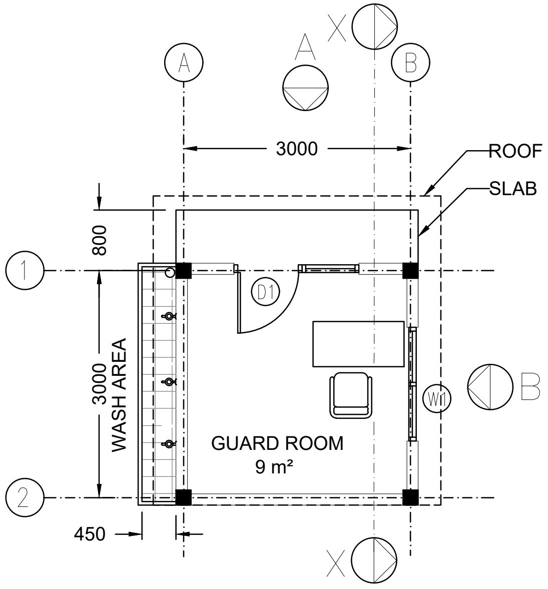
A
X
A
B
3000
ROOF
SLAB
800
1
D1
3000
WASH AREA
W1
B
GUARD ROOM
9 m²
2
450
X

GROUND FLOOR LAYOUT PLAN

1:100

Ministry of Environment, Climate Change and Technology
Green Building, Handhuvareehigun
Rep of Maldives

KOCKS CONSULT GMBH
Stegemannstr. 32-38
Tel: +49 261 1302-400
Email: info@kocks-ing.de

WATER SOLUTIONS PVT LTD
4th FL, M. Niadhurumaage
Tel: +960 3341643
Email: info@water-solutions.biz

Construction of Island Waste Management Centers

GUARD ROOM
TYPE-A

DESIGNED	KASDARLI
DRAFTED	JALEEL
CHECKED	FAYAZ
PROJECT#	213-98616

AMMENDMENTS

DESIGN

Scale	Paper
AS GIVEN	A4

Drawing No.

1

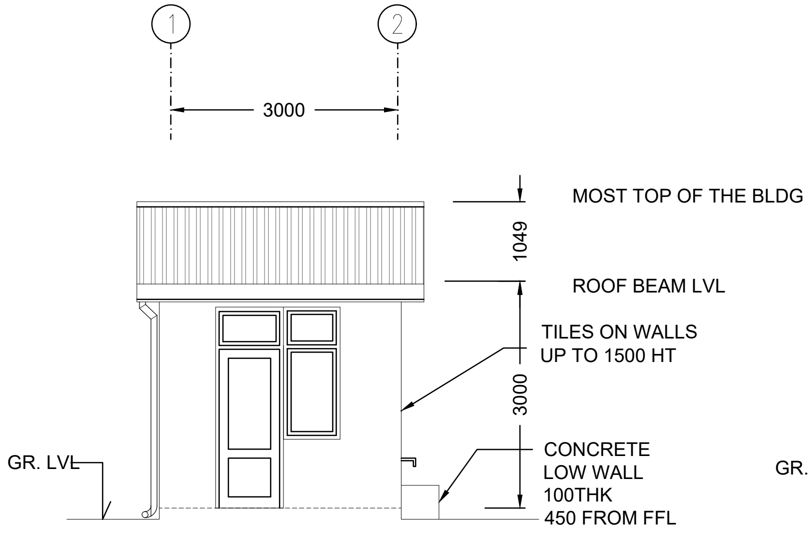
1
2
3000
MOST TOP OF THE BLDG
1049
ROOF BEAM LVL
TILES ON WALLS
UP TO 1500 HT
3000
CONCRETE
LOW WALL
100THK
450 FROM FFL
GR. LVL

ELEVATION A

1:100

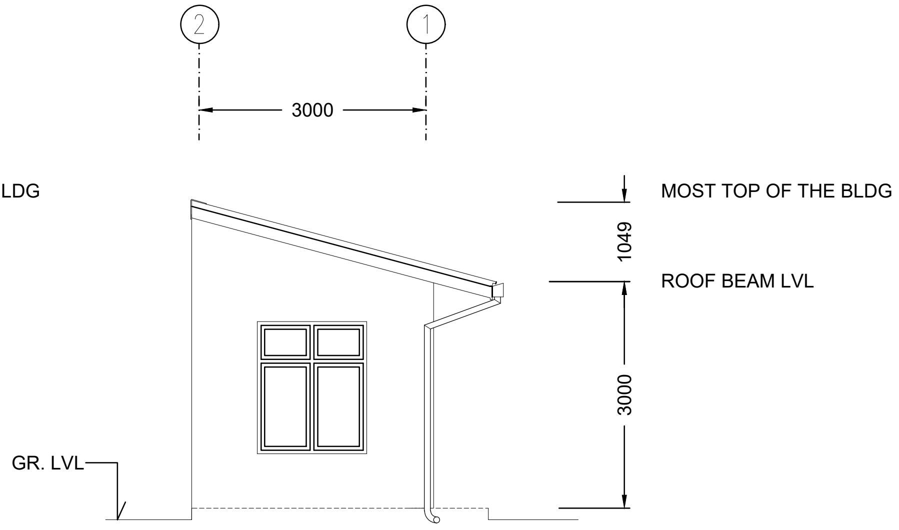
2
1
3000
MOST TOP OF THE BLDG
1049
ROOF BEAM LVL
3000
GR. LVL

ELEVATION B

1:100

Ministry of Environment, Climate
Change and Technology
Green Building, Handhuvareehigun
Rep of Maldives

KOCKS
INGENIEURE
KOCKS CONSULT GMBH
Stegemannstr. 32-38
Tel: +49 261 1302-400
Email: info@kocks-ing.de

WS
WATER SOLUTIONS PVT LTD
4th FL, M. Niadhurumaage
Tel: +960 3341643
Email: info@water-solutions.biz

Construction of Island Waste
Management Centers

GUARD ROOM
TYPE-A

DESIGNED	KASDARLI
DRAFTED	JALEEL
CHECKED	FAYAZ
PROJECT#	213-98616

AMMENDMENTS

DESIGN

Scale	Paper
AS GIVEN	A4

Drawing No.
2

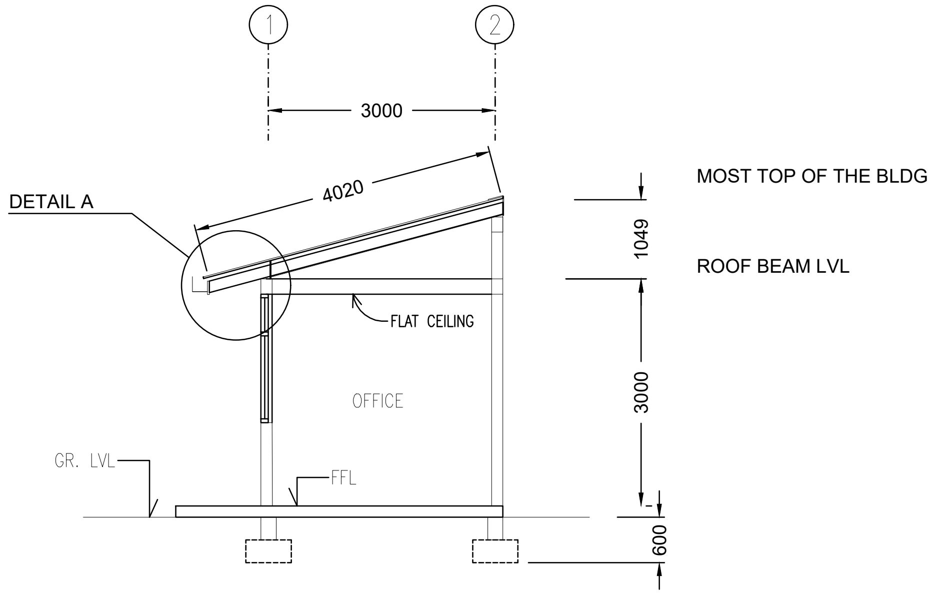
1
2
3000
4020
DETAIL A
MOST TOP OF THE BLDG
1049
ROOF BEAM LVL
FLAT CEILING
OFFICE
3000
GR. LVL
FFL
600

SECTION X-X

1:100

Ministry of Environment, Climate Change and Technology
Green Building, Handhuvareehigun
Rep of Maldives

KOCKS INGENIEURE
KOCKS CONSULT GMBH
Stegemannstr. 32-38
Tel: +49 261 1302-400
Email: info@kocks-ing.de

WS
WATER SOLUTIONS PVT LTD
4th FL, M. Niadhurumaage
Tel: +960 3341643
Email: info@water-solutions.biz

Construction of Island Waste Management Centers

GUARD ROOM
TYPE-A

DESIGNED	KASDARLI
DRAFTED	JALEEL
CHECKED	FAYAZ
PROJECT#	213-98616

AMMENDMENTS

DESIGN

Scale	Paper
AS GIVEN	A4

Drawing No.
3

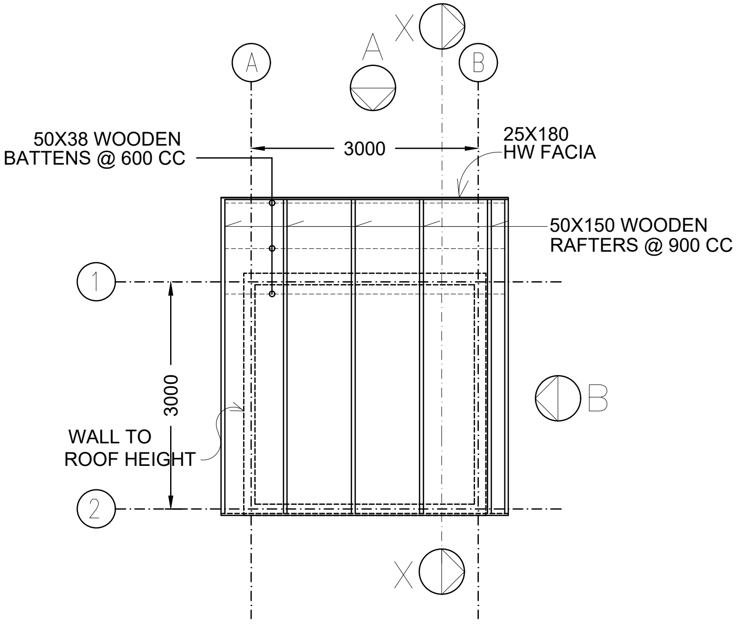
A
B
X
A
50X38 WOODEN
BATTENS @ 600 CC
3000
25X180
HW FACIA
50X150 WOODEN
RAFTERS @ 900 CC
1
3000
B
WALL TO
ROOF HEIGHT
2
X

ROOF STRUCTURE PLAN

1:100

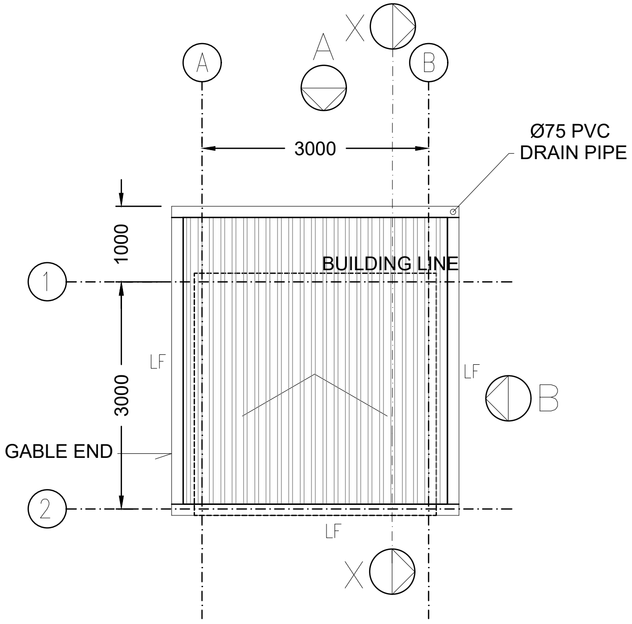
A
B
X
A
3000
Ø75 PVC
DRAIN PIPE
1000
BUILDING LINE
1
LF
LF
3000
B
GABLE END
2
LF
X

ROOF LAYOUT PLAN

1:100

LF: LONGITUDINAL FLASHING

Ministry of Environment, Climate
Change and Technology
Green Building, Handhuvareehigun
Rep of Maldives

KOCKS CONSULT GMBH
Stegemannstr. 32-38
Tel: +49 261 1302-400
Email: info@kocks-ing.de

WATER SOLUTIONS PVT LTD
4th FL, M. Niadhurumaage
Tel: +960 3341643
Email: info@water-solutions.biz

Construction of Island Waste
Management Centers

GUARD ROOM
TYPE-A

DESIGNED	KASDARLI
DRAFTED	JALEEL
CHECKED	FAYAZ
PROJECT#	213-98616

AMMENDMENTS

DESIGN

Scale	Paper
AS GIVEN	A4

Drawing No.

4

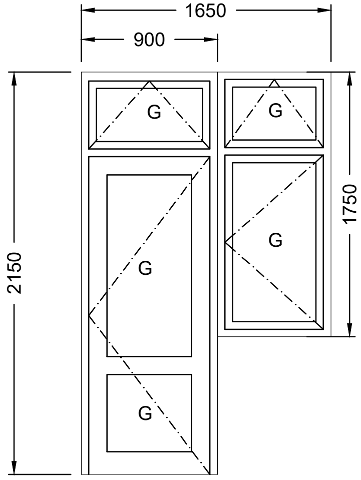

D1

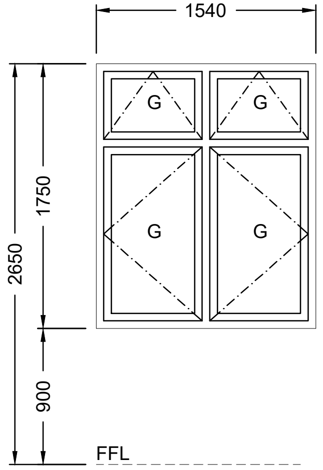

W1

G: 6MM THK CLEAR GLASS

ALL DOORS AND WINDOWS SHOULD BE ALUMINIUM FRAME WITH POWDER COATED WHITE FINISH

DOOR / WINDOW

1:50

Ministry of Environment, Climate Change and Technology
Green Building, Handhuvareehigun
Rep of Maldives

KOCKS INGENIEURE
KOCKS CONSULT GMBH
Stegemannstr. 32-38
Tel: +49 261 1302-400
Email: info@kocks-ing.de

WS
WATER SOLUTIONS PVT LTD
4th FL, M. Niadhurumaage
Tel: +960 3341643
Email: info@water-solutions.biz

Construction of Island Waste Management Centers

GUARD ROOM
TYPE-A

DESIGNED	KASDARLI
DRAFTED	JALEEL
CHECKED	FAYAZ
PROJECT#	213-98616

AMMENDMENTS

DESIGN

Scale	Paper
AS GIVEN	A4

Drawing No.
5

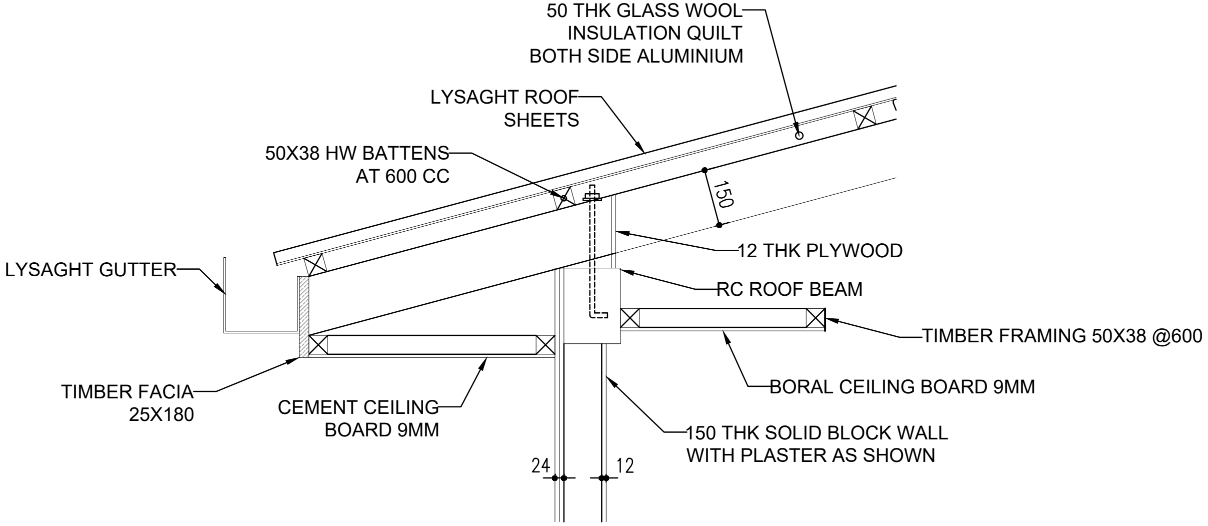
50 THK GLASS WOOL
INSULATION QUILT
BOTH SIDE ALUMINIUM
LYSAGHT ROOF
SHEETS
50X38 HW BATTENS
AT 600 CC
LYSAGHT GUTTER
150
12 THK PLYWOOD
RC ROOF BEAM
TIMBER FRAMING 50X38 @600
TIMBER FACIA
25X180
CEMENT CEILING
BOARD 9MM
BORAL CEILING BOARD 9MM
150 THK SOLID BLOCK WALL
WITH PLASTER AS SHOWN
24
12

DETAIL A

1:20

Ministry of Environment, Climate
Change and Technology
Green Building, Handhuvareehigun
Rep of Maldives

KOCKS INGENIEURE
KOCKS CONSULT GMBH
Stegemannstr. 32-38
Tel: +49 261 1302-400
Email: info@kocks-ing.de

WS
WATER SOLUTIONS PVT LTD
4th FL, M. Niadhurumaage
Tel: +960 3341643
Email: info@water-solutions.biz

Construction of Island Waste
Management Centers

GUARD ROOM
TYPE-A

DESIGNED	KASDARLI
DRAFTED	JALEEL
CHECKED	FAYAZ
PROJECT#	213-98616

AMMENDMENTS

DESIGN

Scale	Paper
AS GIVEN	A4

Drawing No.

6

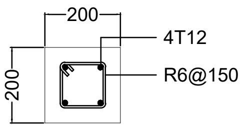
200
200
4T12
R6@150

C1

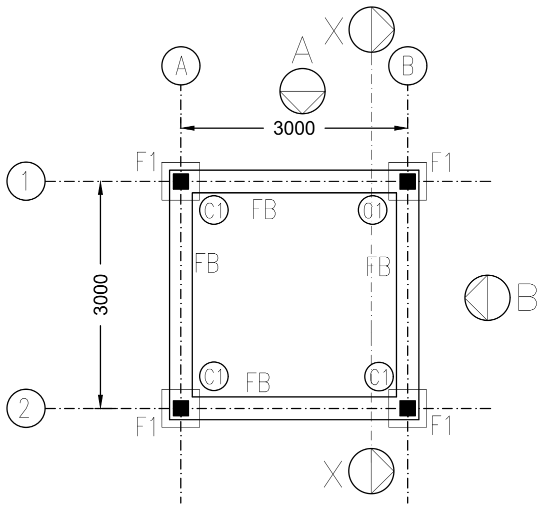
A
B
X
X
A
B
1
2
3000
3000
F1
F1
F1
F1
C1
C1
C1
C1
FB
FB
FB
FB

FOUNDATION LAYOUT PLAN

1:100

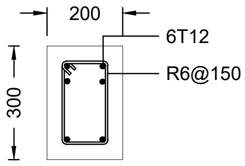
200
300
6T12
R6@150

FB

COVER

Foundations: 50mm

Columns : Below Ground 50mm, Above Ground 40mm
Ground Slab : 40mm
RB : 30mm

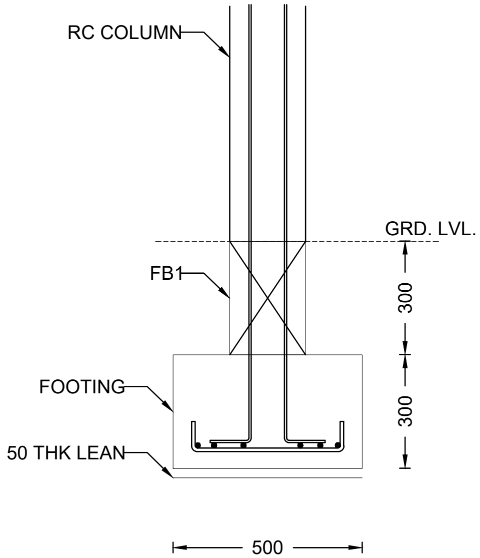
RC COLUMN
GRD. LVL.
FB1
300
300
FOOTING
50 THK LEAN
500

F1

PAD	SIZE	REINFORCEMENT
F1	500X500X300	T10@150 BW

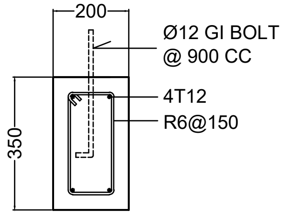
200
Ø12 GI BOLT
@ 900 CC
4T12
R6@150
350

RB1

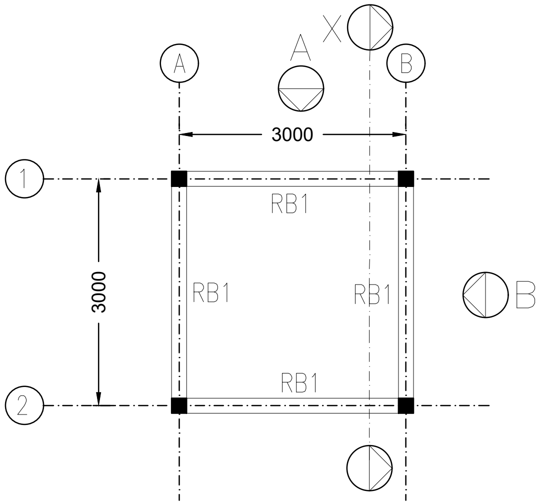
A
B
X
A
B
1
2
3000
3000
RB1
RB1
RB1
RB1

ROOF BEAM PLAN

1:100

Ministry of Environment, Climate Change and Technology
Green Building, Handhuvareehigun
Rep of Maldives

KOCKS INGENIEURE
KOCKS CONSULT GMBH
Stegemannstr. 32-38
Tel: +49 261 1302-400
Email: info@kocks-ing.de

WS
WATER SOLUTIONS PVT LTD
4th FL, M. Niadhurumaage
Tel: +960 3341643
Email: info@water-solutions.biz

Construction of Island Waste Management Centers

GUARD ROOM
TYPE-A

DESIGNED	KASDARLI
DRAFTED	JALEEL
CHECKED	FAYAZ
PROJECT#	213-98616

AMMENDMENTS

DESIGN

Scale	Paper
AS GIVEN	A4

Drawing No.
7

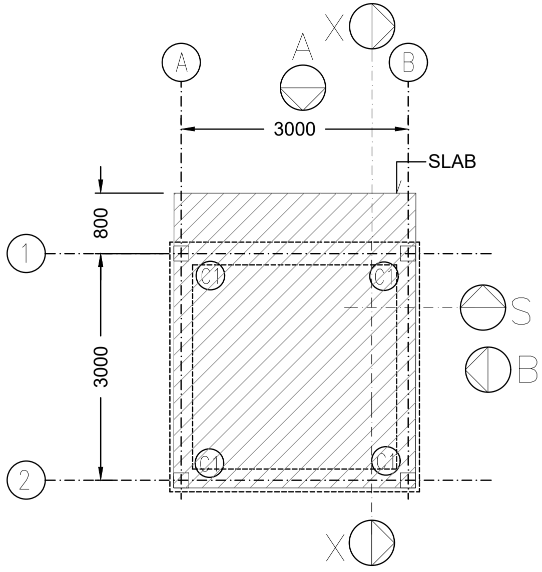
A
X
A
B
3000
SLAB
800
1
3000
C1
C1
S
B
C1
C1
2
X

GROUND SLAB LAYOUT PLAN

1:100

NOTES:

GROUND SLAB IS 100 THICK ON
1000 GAUGE POLYTHENE DPM ON
200 COMPACTED HARDCORE

SLAB RFMT: T10@200 BW

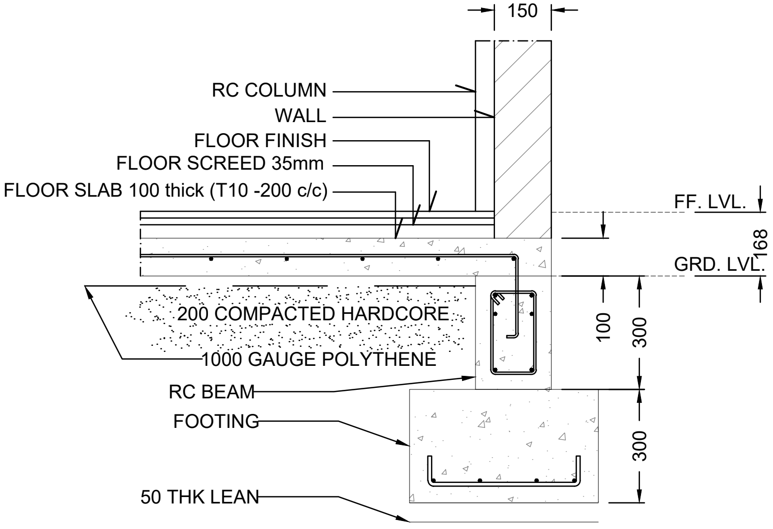
150
RC COLUMN
WALL
FLOOR FINISH
FLOOR SCREED 35mm
FLOOR SLAB 100 thick (T10 -200 c/c)
FF. LVL.
168
GRD. LVL.
200 COMPACTED HARDCORE
1000 GAUGE POLYTHENE
100
300
RC BEAM
FOOTING
300
50 THK LEAN

SECTION-S

1:20

Ministry of Environment, Climate
Change and Technology
Green Building, Handhuvareehigun
Rep of Maldives

KOCKS INGENIEURE
KOCKS CONSULT GMBH
Stegemannstr. 32-38
Tel: +49 261 1302-400
Email: info@kocks-ing.de

WS
WATER SOLUTIONS PVT LTD
4th FL, M. Niadhurumaage
Tel: +960 3341643
Email: info@water-solutions.biz

Construction of Island Waste
Management Centers

GUARD ROOM
TYPE-A

DESIGNED	KASDARLI
DRAFTED	JALEEL
CHECKED	FAYAZ
PROJECT#	213-98616

AMMENDMENTS

DESIGN

Scale	Paper
AS GIVEN	A4

Drawing No.
8

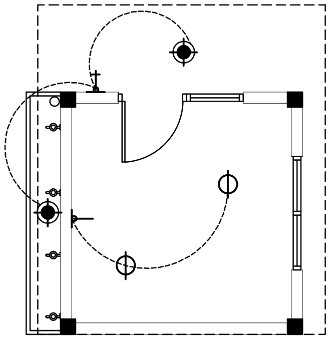

LIGHTING LAYOUT PLAN

1:100

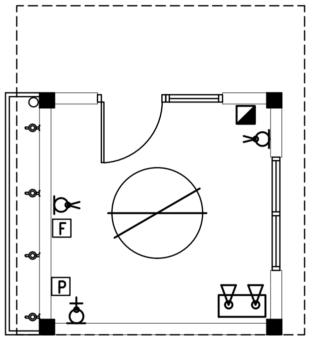

FAN & POWER LAYOUT PLAN

1:100

ELECTRICAL LEGEND

CEILING RECESSED E/S DOWN LIGHT

WATERPROOF SPOTLIGHT LV HALOGEN

EMERGENCY LIGHT(RECHARGEABLE)

ONE-WAY SWITCH (SINGLE GANG)

ONE-WAY SWITCH (DOUBLE GANG)

TWO-WAY SWITCH (SINGLE GANG)

WALL SOCKET OUTLET (DOUBLE GANG)

SERVICE SOCKET OUTLET

WATERPROOF WALL SOCKET OUTLET (SINGLE GANG)

WATERPROOF SERVICE SOCKET OUTLET (SINGLE GANG) 1.8 H

CEILING FAN 1.2M DIA

◪ D-BOARD

P WELL WATER PUMP

F FAN DIMMER

NOTE:
ALL HEIGHTS ARE FROM FINISHED FLOOR LEVEL

ALL WALL SOCKET OUTLETS ARE 0.3M AFFL
EXCEPT WHERE STATED

ALL LIGHT SWITCHES ARE AT 1.2M AFFL

Ministry of Environment, Climate
Change and Technology
Green Building, Handhuvareehigun
Rep of Maldives

KOCKS INGENIEURE
KOCKS CONSULT GMBH
Stegemannstr. 32-38
Tel: +49 261 1302-400
Email: info@kocks-ing.de

WS
WATER SOLUTIONS PVT LTD
4th FL, M. Niadhurumaage
Tel: +960 3341643
Email: info@water-solutions.biz

Construction of Island Waste
Management Centers

GUARD ROOM
TYPE-A

DESIGNED	KASDARLI
DRAFTED	JALEEL
CHECKED	FAYAZ
PROJECT#	213-98616

AMMENDMENTS

DESIGN

Scale	Paper
AS GIVEN	A4

Drawing No.
9

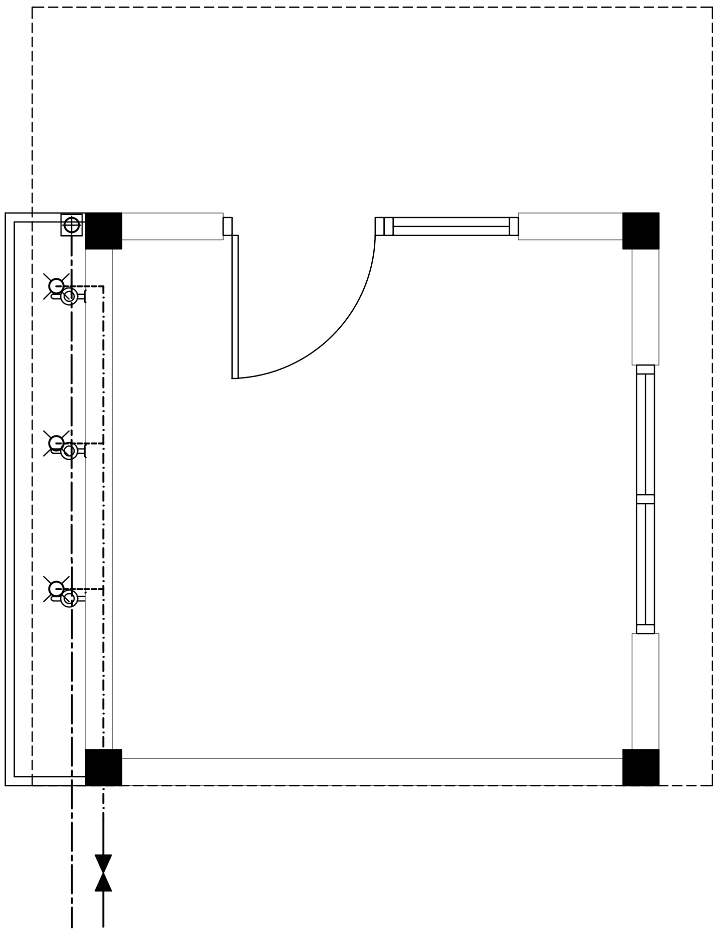

SEWAGE DISPOSAL AND WATER SUPPLY LAYOUT PLAN

PLUMBING LEGEND

─⊗	FAUCET
⊕	DIA 100 DRAIN
⊗	CLEAN-OUT HATCH
─▶◀─	GATE VALVE
═══	DIA 100 WASTE PIPE
─·─·─	DIA 50 WASTE PIPE
── · ──	DIA 12 COLD WATER SUPPLY

Ministry of Environment, Climate
Change and Technology
Green Building, Handhuvareehigun
Rep of Maldives

KOCKS INGENIEURE
KOCKS CONSULT GMBH
Stegemannstr. 32-38
Tel: +49 261 1302-400
Email: info@kocks-ing.de

WS
WATER SOLUTIONS PVT LTD
4th FL, M. Niadhurumaage
Tel: +960 3341643
Email: info@water-solutions.biz

Construction of Island Waste
Management Centers

GUARD ROOM
TYPE-A

DESIGNED	KASDARLI
DRAFTED	JALEEL
CHECKED	FAYAZ
PROJECT#	213-98616

AMMENDMENTS

DESIGN

Scale	Paper
AS GIVEN	A4

Drawing No.
10

Construction of Island Waste Management Center

OFFICE BUILDING TYPE-B

Ministry of Environment, Climate Change and Technology
Green Building, Handhuvareehigun
Rep of Maldives

KOCKS CONSULT GMBH
Stegemannstr. 32-38
Tel: +49 261 1302-400
Email: info@kocks-ing.de

WATER SOLUTIONS PVT LTD
4th FL, M. Niadhurumaage
Tel: +960 3341643
Email: info@water-solutions.biz

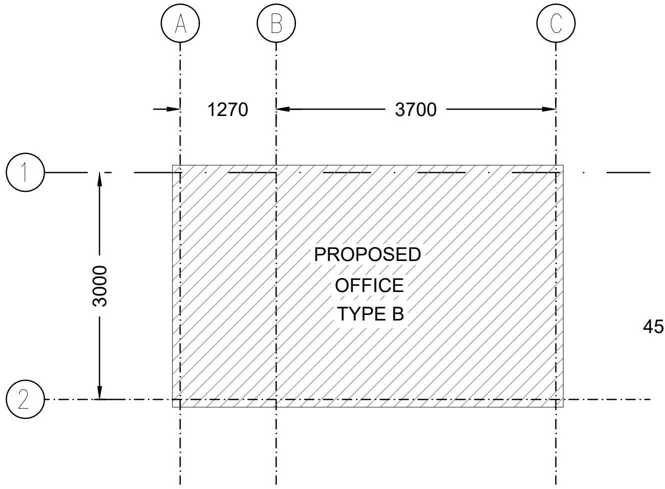
A
B
C
1270
3700
1
2
3000
PROPOSED
OFFICE
TYPE B

SITE PLAN

1:100

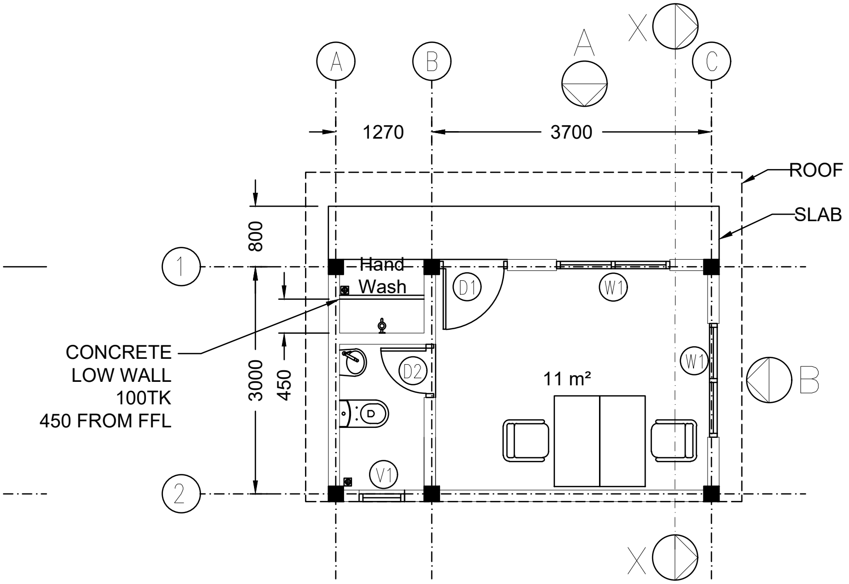
A
B
C
X
A
1270
3700
ROOF
SLAB
800
1
2
3000
450
Hand
Wash
D1
W1
D2
W1
11 m²
V1
B
X
CONCRETE
LOW WALL
100TK
450 FROM FFL

GROUND FLOOR LAYOUT PLAN

1:100

Ministry of Environment, Climate Change and Technology
Green Building, Handhuvareehigun
Rep of Maldives

KOCKS CONSULT GMBH
Stegemannstr. 32-38
Tel: +49 261 1302-400
Email: info@kocks-ing.de

WATER SOLUTIONS PVT LTD
4th FL, M. Niadhurumaage
Tel: +960 3341643
Email: info@water-solutions.biz

Construction of Island Waste Management Centers

OFFICE BUILDING
TYPE-B

DESIGNED	KASDARLI
DRAFTED	JALEEL
CHECKED	FAYAZ
PROJECT#	213-98616

AMMENDMENTS

DESIGN

Scale	Paper
AS GIVEN	A4

Drawing No.
1

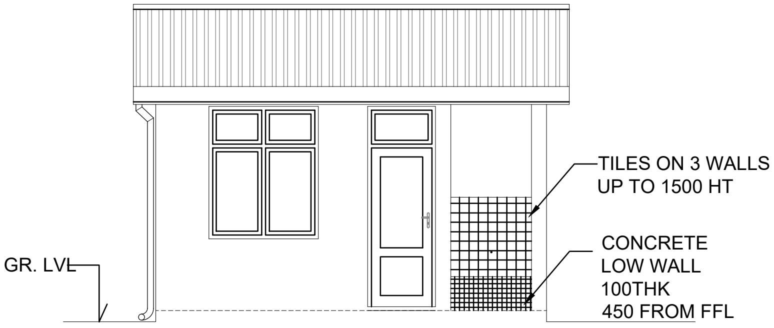
GR. LVL
TILES ON 3 WALLS
UP TO 1500 HT
CONCRETE
LOW WALL
100THK
450 FROM FFL

ELEVATION A
1:100

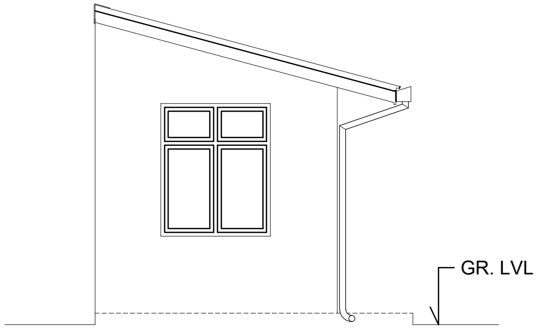

ELEVATION B
1:100

Ministry of Environment, Climate
Change and Technology
Green Building, Handhuvareehigun
Rep of Maldives

KOCKS CONSULT GMBH
Stegemannstr. 32-38
Tel: +49 261 1302-400
Email: info@kocks-ing.de

WATER SOLUTIONS PVT LTD
4th FL, M. Niadhurumaage
Tel: +960 3341643
Email: info@water-solutions.biz

Construction of Island Waste
Management Centers

OFFICE BUILDING
TYPE-B

DESIGNED	KASDARLI
DRAFTED	JALEEL
CHECKED	FAYAZ
PROJECT#	213-98616

AMMENDMENTS

DESIGN

Scale	Paper
AS GIVEN	A4

Drawing No.
2

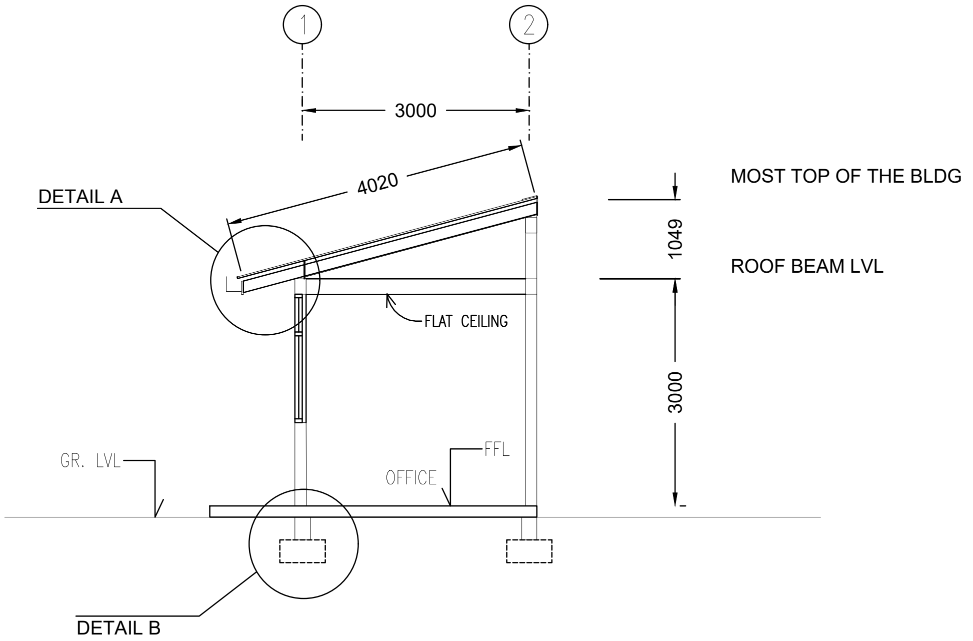
1
2
3000
4020
DETAIL A
MOST TOP OF THE BLDG
1049
ROOF BEAM LVL
FLAT CEILING
3000
GR. LVL
OFFICE
FFL
DETAIL B

SECTION X-X

1:100

Ministry of Environment, Climate Change and Technology
Green Building, Handhuvareehigun
Rep of Maldives

KOCKS CONSULT GMBH
Stegemannstr. 32-38
Tel: +49 261 1302-400
Email: info@kocks-ing.de

WATER SOLUTIONS PVT LTD
4th FL, M. Niadhurumaage
Tel: +960 3341643
Email: info@water-solutions.biz

Construction of Island Waste Management Centers

OFFICE BUILDING
TYPE-B

DESIGNED	KASDARLI
DRAFTED	JALEEL
CHECKED	FAYAZ
PROJECT#	213-98616

AMMENDMENTS

DESIGN

Scale	Paper
AS GIVEN	A4

Drawing No.
3

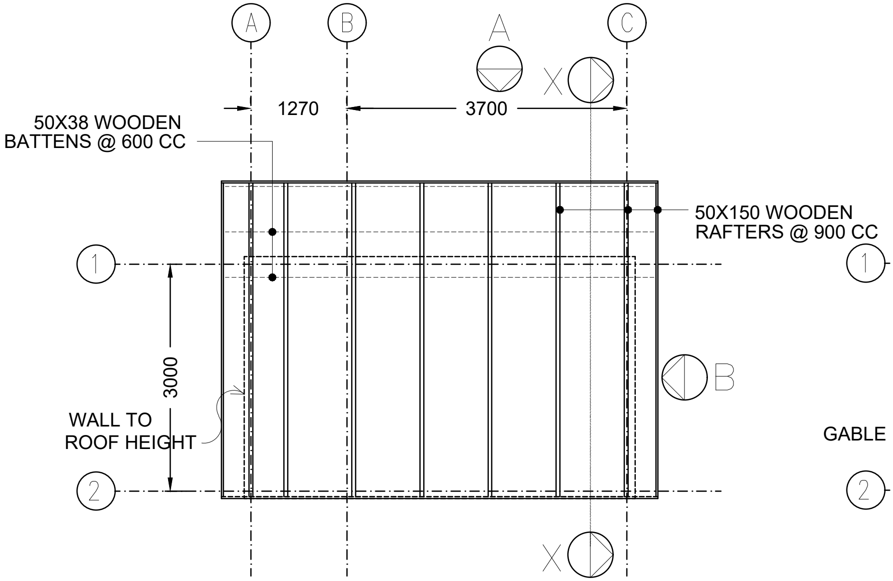
A
B
A
C
X
1270
3700
50X38 WOODEN
BATTENS @ 600 CC
50X150 WOODEN
RAFTERS @ 900 CC
1
3000
B
WALL TO
ROOF HEIGHT
2
X

ROOF STRUCTURE PLAN

1:100

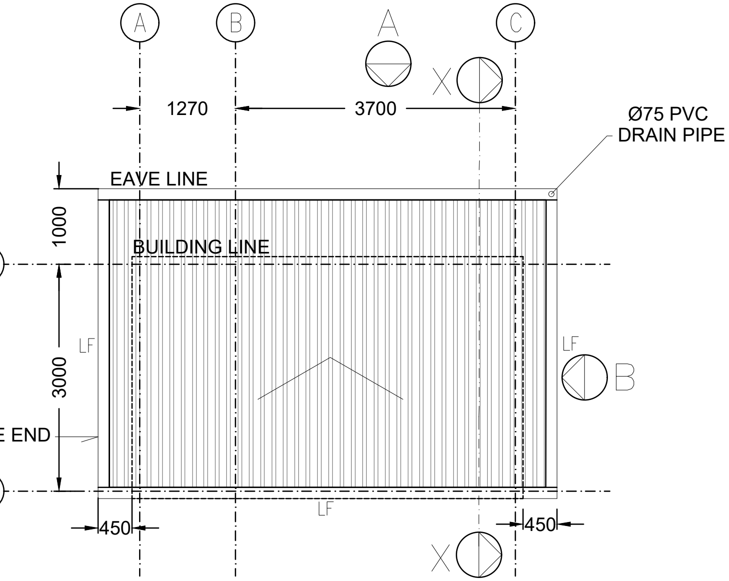
A
B
A
C
X
1270
3700
Ø75 PVC
DRAIN PIPE
EAVE LINE
1000
BUILDING LINE
1
LF
LF
3000
B
GABLE END
2
450
LF
450
X

ROOF LAYOUT PLAN

1:100

LF: LONGITUDINAL FLASHING
RC: RIDGE CAPPING

Ministry of Environment, Climate Change and Technology
Green Building, Handhuvareehigun
Rep of Maldives

KOCKS CONSULT GMBH
Stegemannstr. 32-38
Tel: +49 261 1302-400
Email: info@kocks-ing.de

WATER SOLUTIONS PVT LTD
4th FL, M. Niadhurumaage
Tel: +960 3341643
Email: info@water-solutions.biz

Construction of Island Waste Management Centers

OFFICE BUILDING
TYPE-B

DESIGNED	KASDARLI
DRAFTED	JALEEL
CHECKED	FAYAZ
PROJECT#	213-98616

AMMENDMENTS

DESIGN

Scale	Paper
AS GIVEN	A4

Drawing No.
4

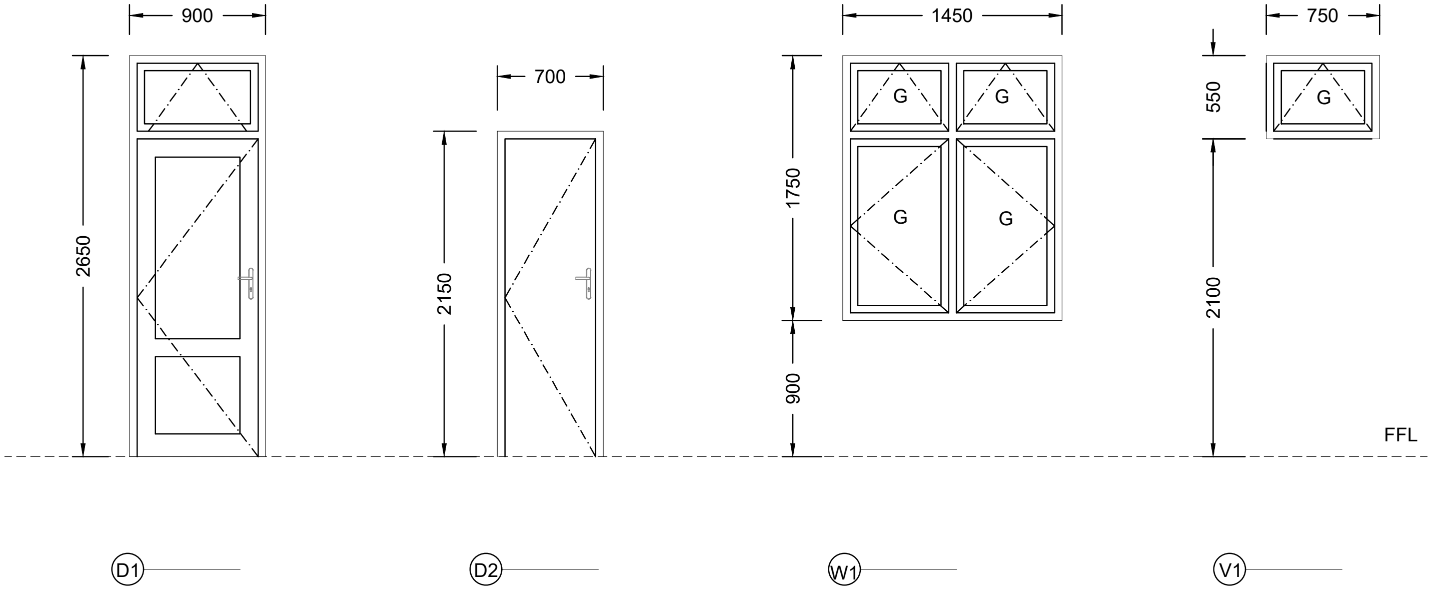

G: 6MM THK CLEAR GLASS

ALL DOORS AND WINDOWS SHOULD BE ALUMINIUM FRAME WITH POWDER COATED WHITE FINISH

DOOR / WINDOW

1:50

Ministry of Environment, Climate Change and Technology
Green Building, Handhuvareehigun
Rep of Maldives

KOCKS CONSULT GMBH
Stegemannstr. 32-38
Tel: +49 261 1302-400
Email: info@kocks-ing.de

WATER SOLUTIONS PVT LTD
4th FL, M. Niadhurumaage
Tel: +960 3341643
Email: info@water-solutions.biz

Construction of Island Waste Management Centers

OFFICE BUILDING
TYPE-B

DESIGNED	KASDARLI
DRAFTED	JALEEL
CHECKED	FAYAZ
PROJECT#	213-98616

AMMENDMENTS

DESIGN

Scale	Paper
AS GIVEN	A4

Drawing No.
5

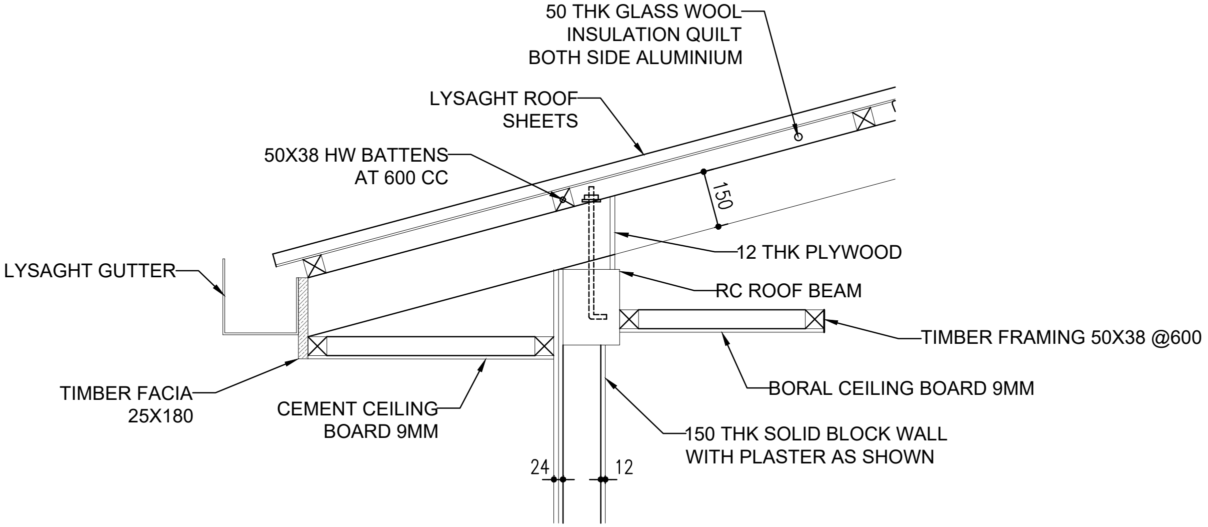
50 THK GLASS WOOL
INSULATION QUILT
BOTH SIDE ALUMINIUM
LYSAGHT ROOF
SHEETS
50X38 HW BATTENS
AT 600 CC
150
LYSAGHT GUTTER
12 THK PLYWOOD
RC ROOF BEAM
TIMBER FRAMING 50X38 @600
BORAL CEILING BOARD 9MM
TIMBER FACIA
25X180
CEMENT CEILING
BOARD 9MM
150 THK SOLID BLOCK WALL
WITH PLASTER AS SHOWN
24
12

DETAIL A

1:20

Ministry of Environment, Climate
Change and Technology
Green Building, Handhuvareehigun
Rep of Maldives

KOCKS CONSULT GMBH
Stegemannstr. 32-38
Tel: +49 261 1302-400
Email: info@kocks-ing.de

WATER SOLUTIONS PVT LTD
4th FL, M. Niadhurumaage
Tel: +960 3341643
Email: info@water-solutions.biz

Construction of Island Waste
Management Centers

OFFICE BUILDING
TYPE-B

DESIGNED	KASDARLI
DRAFTED	JALEEL
CHECKED	FAYAZ
PROJECT#	213-98616

AMMENDMENTS

DESIGN

Scale	Paper
AS GIVEN	A4

Drawing No.
6

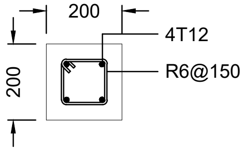
200
200
4T12
R6@150

C1

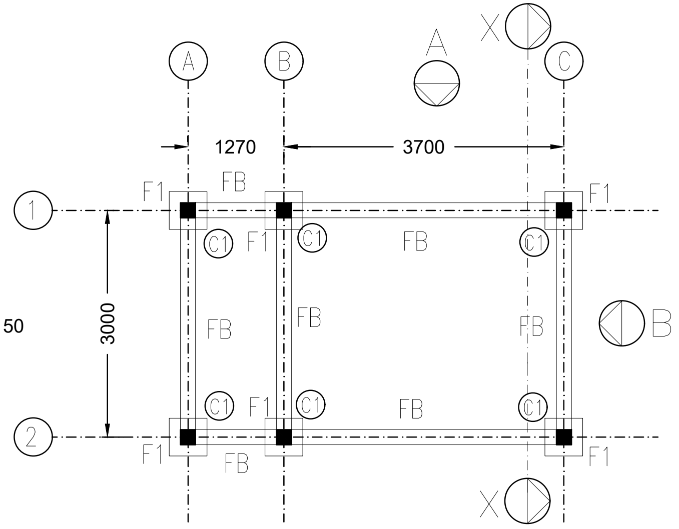
A
B
C
A
X
X
B
1
2
1270
3700
3000
F1
FB
C1
FB

FOUNDATION LAYOUT PLAN

1:100

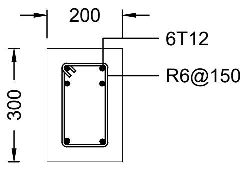
200
300
6T12
R6@150

FB

COVER

Foundations: 50mm

Columns : Below Ground 50mm, Above Ground 40mm
Ground Slab : 40mm
RB : 30mm

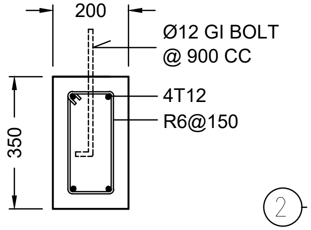
200
350
Ø12 GI BOLT
@ 900 CC
4T12
R6@150

RB1

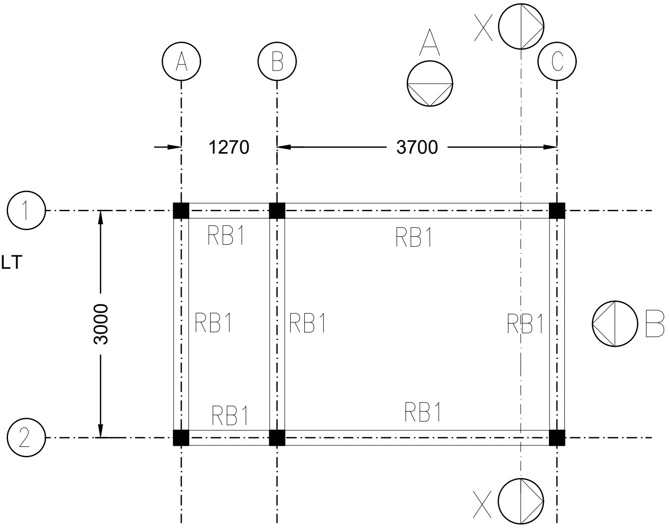
A
B
C
A
X
X
B
1
2
1270
3700
3000
RB1

ROOF BEAM PLAN

1:100

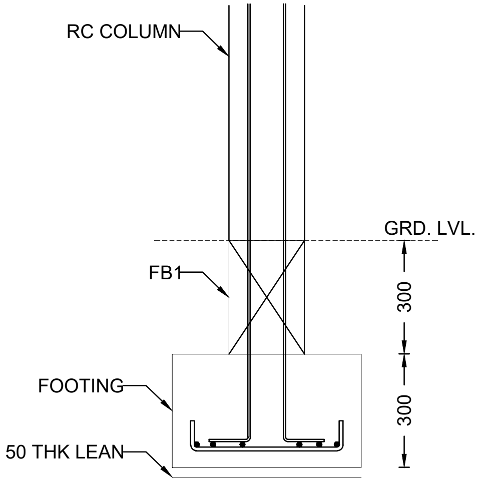
RC COLUMN
GRD. LVL.
FB1
300
300
FOOTING
50 THK LEAN

DETAIL B

1:20

Ministry of Environment, Climate Change and Technology
Green Building, Handhuvareehigun
Rep of Maldives

KOCKS INGENIEURE
KOCKS CONSULT GMBH
Stegemannstr. 32-38
Tel: +49 261 1302-400
Email: info@kocks-ing.de

WS
WATER SOLUTIONS PVT LTD
4th FL, M. Niadhurumaage
Tel: +960 3341643
Email: info@water-solutions.biz

Construction of Island Waste Management Centers

OFFICE BUILDING
TYPE-B

DESIGNED	KASDARLI
DRAFTED	JALEEL
CHECKED	FAYAZ
PROJECT#	213-98616

AMMENDMENTS

DESIGN

Scale	Paper
AS GIVEN	A4

Drawing No.
7

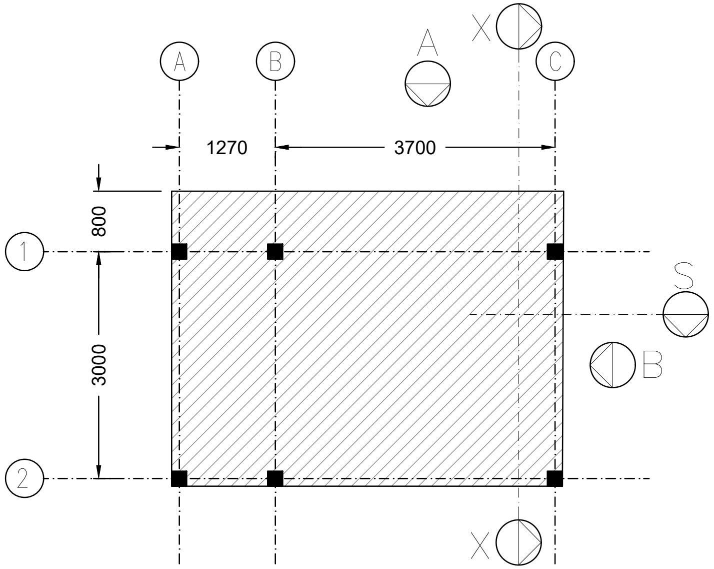
A
B
C
A
X
X
S
B
1
2
1270
3700
800
3000

GROUND SLAB LAYOUT PLAN

1:100

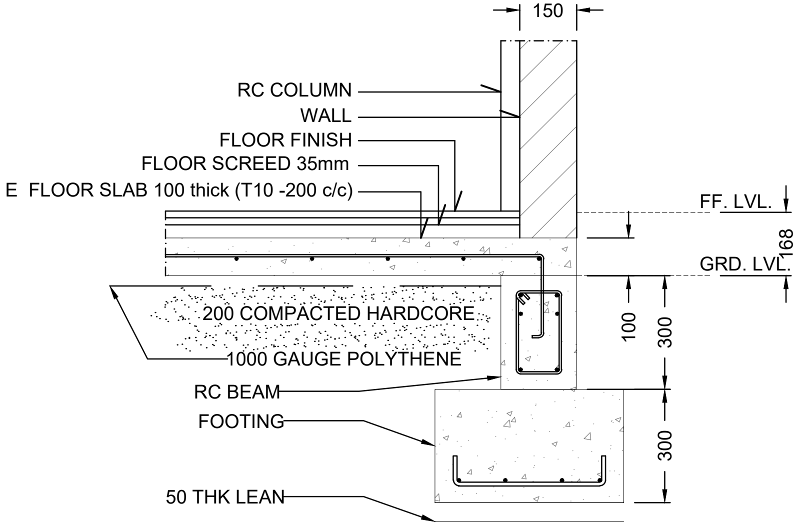
150
RC COLUMN
WALL
FLOOR FINISH
FLOOR SCREED 35mm
E FLOOR SLAB 100 thick (T10 -200 c/c)
FF. LVL.
GRD. LVL.
168
200 COMPACTED HARDCORE
1000 GAUGE POLYTHENE
100
300
RC BEAM
FOOTING
300
50 THK LEAN

SECTION-S

1:20

NOTES:

GROUND SLAB IS 100 THICK ON
1000 GAUGE POLYTHENE DPM ON
200 COMPACTED HARDCORE

SLAB RFMT: T10@200 BW

Ministry of Environment, Climate Change and Technology
Green Building, Handhuvareehigun
Rep of Maldives

KOCKS INGENIEURE
KOCKS CONSULT GMBH
Stegemannstr. 32-38
Tel: +49 261 1302-400
Email: info@kocks-ing.de

WS
WATER SOLUTIONS PVT LTD
4th FL, M. Niadhurumaage
Tel: +960 3341643
Email: info@water-solutions.biz

Construction of Island Waste Management Centers

OFFICE BUILDING
TYPE-B

DESIGNED	KASDARLI
DRAFTED	JALEEL
CHECKED	FAYAZ
PROJECT#	213-98616

AMMENDMENTS

DESIGN

Scale	Paper
AS GIVEN	A4

Drawing No.

8

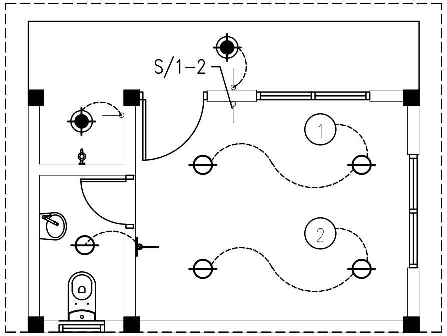

LIGHTING LAYOUT PLAN

1:100

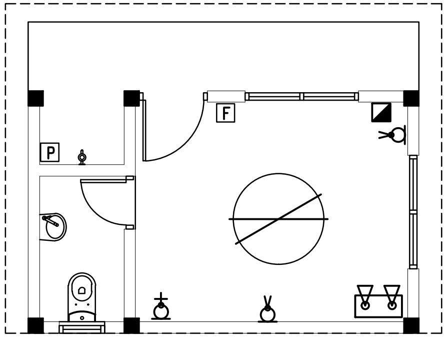

FAN & POWER LAYOUT PLAN

1:100

ELECTRICAL LEGEND

CEILING RECESSED E/S DOWN LIGHT

WATERPROOF SPOTLIGHT LV HALOGEN

EMERGENCY LIGHT(RECHARGEABLE)

ONE-WAY SWITCH (SINGLE GANG)

ONE-WAY SWITCH (DOUBLE GANG)

TWO-WAY SWITCH (SINGLE GANG)

WALL SOCKET OUTLET (DOUBLE GANG)

SERVICE SOCKET OUTLET

WATERPROOF WALL SOCKET OUTLET (SINGLE GANG)

WATERPROOF SERVICE SOCKET OUTLET (SINGLE GANG) 1.8 H

CEILING FAN 1.2M DIA

D-BOARD

F FAN DIMMER

P WELL WATER PUMP

NOTE:

ALL HEIGHTS ARE FROM FINISHED FLOOR LEVEL

ALL WALL SOCKET OUTLETS ARE 0.3M AFFL EXCEPT WHERE STATED

ALL LIGHT SWITCHES ARE AT 1.2M AFFL

Ministry of Environment, Climate Change and Technology
Green Building, Handhuvareehigun
Rep of Maldives

KOCKS INGENIEURE
KOCKS CONSULT GMBH
Stegemannstr. 32-38
Tel: +49 261 1302-400
Email: info@kocks-ing.de

WS
WATER SOLUTIONS PVT LTD
4th FL, M. Niadhurumaage
Tel: +960 3341643
Email: info@water-solutions.biz

Construction of Island Waste Management Centers

OFFICE BUILDING
TYPE-B

DESIGNED	KASDARLI
DRAFTED	JALEEL
CHECKED	FAYAZ
PROJECT#	213-98616

AMMENDMENTS

DESIGN

Scale	Paper
AS GIVEN	A4

Drawing No.
9

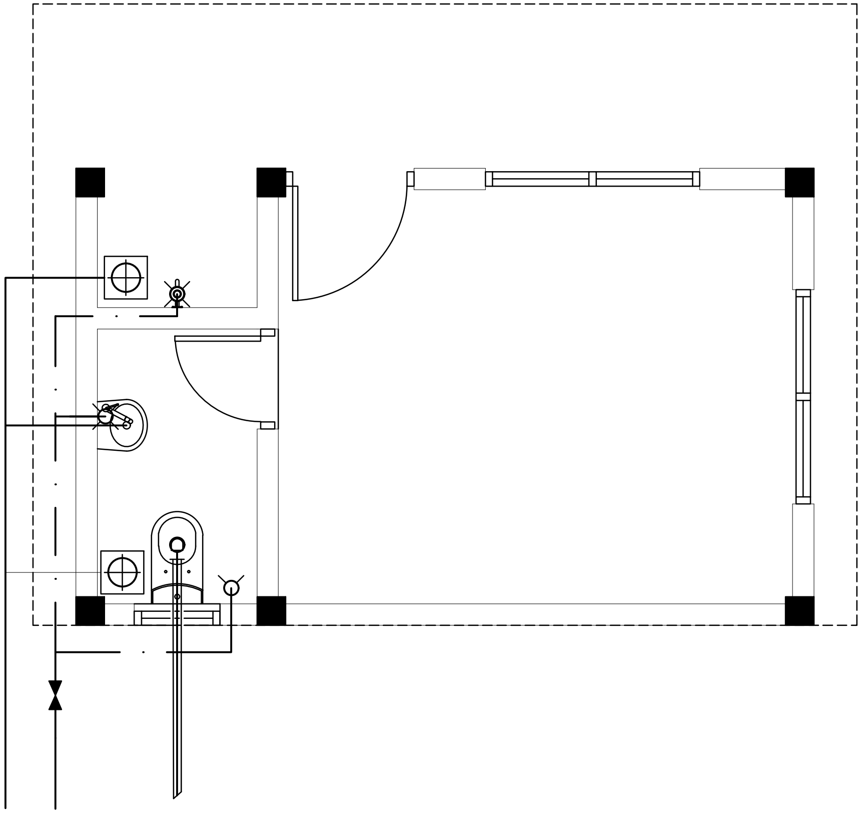

PLUMBING LEGEND

- MUSLIN SHOWER
- FAUCET
- DIA 100 DRAIN
- CLEAN-OUT HATCH
- GATE VALVE
- DIA 100 WASTE PIPE
- DIA 50 WASTE PIPE
- DIA 12 COLD WATER SUPPLY

SEWAGE DISPOSAL AND WATER SUPPLY LAYOUT PLAN

1:100

Ministry of Environment, Climate Change and Technology
Green Building, Handhuvareehigun
Rep of Maldives

KOCKS INGENIEURE
KOCKS CONSULT GMBH
Stegemannstr. 32-38
Tel: +49 261 1302-400
Email: info@kocks-ing.de

WS
WATER SOLUTIONS PVT LTD
4th FL, M. Niadhurumaage
Tel: +960 3341643
Email: info@water-solutions.biz

Construction of Island Waste Management Centers

OFFICE BUILDING
TYPE-B

DESIGNED	KASDARLI
DRAFTED	JALEEL
CHECKED	FAYAZ
PROJECT#	213-98616

AMMENDMENTS

DESIGN

Scale	Paper
AS GIVEN	A4

Drawing No.
10

Construction of
Island Waste Management Center

SHED TYPE-A

Ministry of Environment, Climate Change and Technology
Green Building, Handhuvareehigun
Rep of Maldives

KOCKS INGENIEURE
KOCKS CONSULT GMBH
Stegemannstr. 32-38
Tel: +49 261 1302-400
Email: info@kocks-ing.de

WS
WATER SOLUTIONS PVT LTD
4th FL, M. Niadhurumaage
Tel: +960 3341643
Email: info@water-solutions.biz

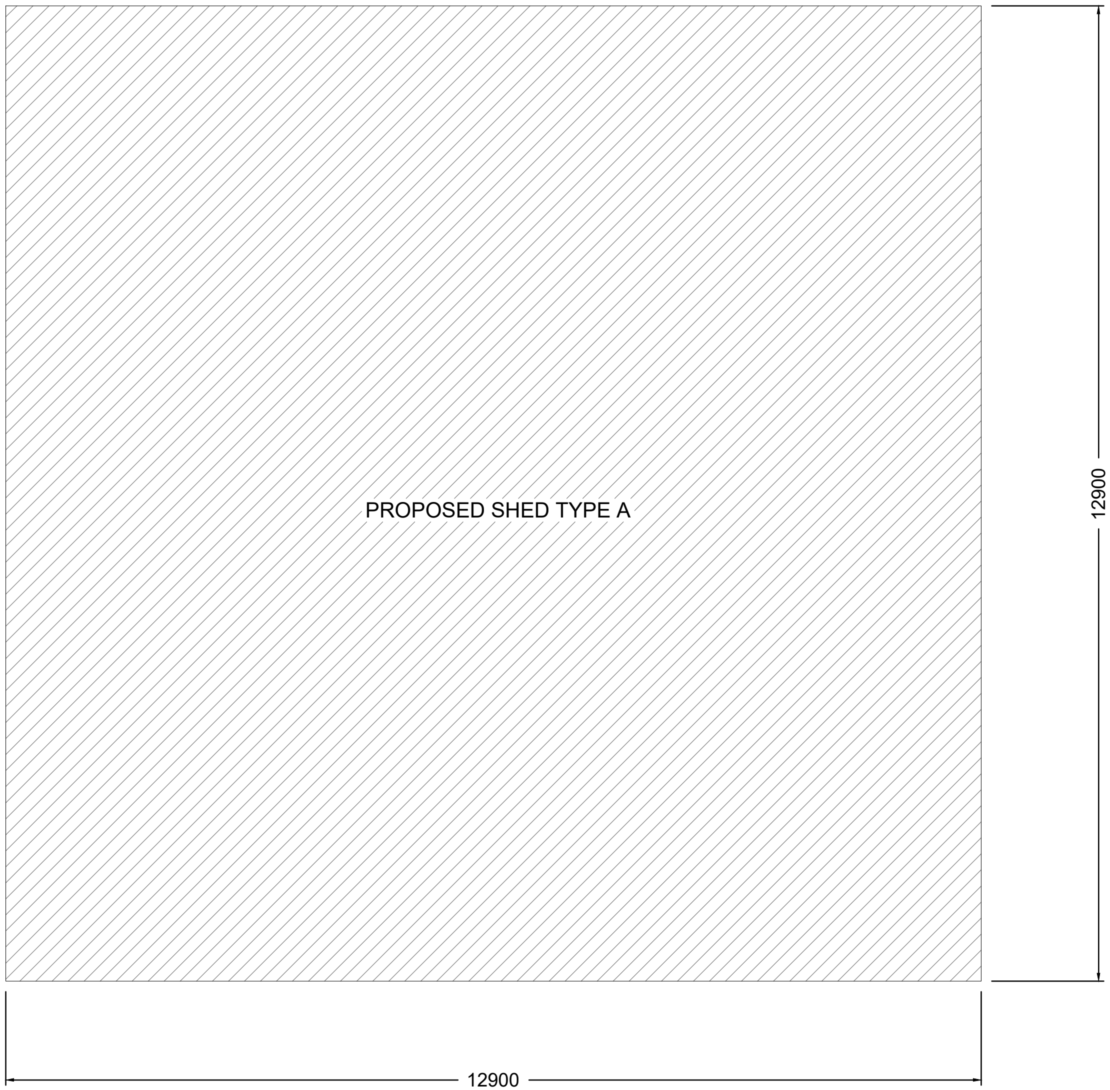

SITE PLAN

1:100

Ministry of Environment, Climate Change and Technology
Green Building, Handhuvareehigun
Rep of Maldives

KOCKS INGENIEURE
KOCKS CONSULT GMBH
Stegemannstr. 32-38
Tel: +49 261 1302-400
Email: info@kocks-ing.de

WS
WATER SOLUTIONS PVT LTD
4th FL, M. Niadhurumaage
Tel: +960 3341643
Email: info@water-solutions.biz

Construction of Island Waste Management Centers

SHED
TYPE-A

DESIGNED	KASDARLI
DRAFTED	JALEEL
CHECKED	FAYAZ
PROJECT#	213-98616

AMMENDMENTS

DESIGN

Scale AS GIVEN	Paper A4

Drawing No.
1

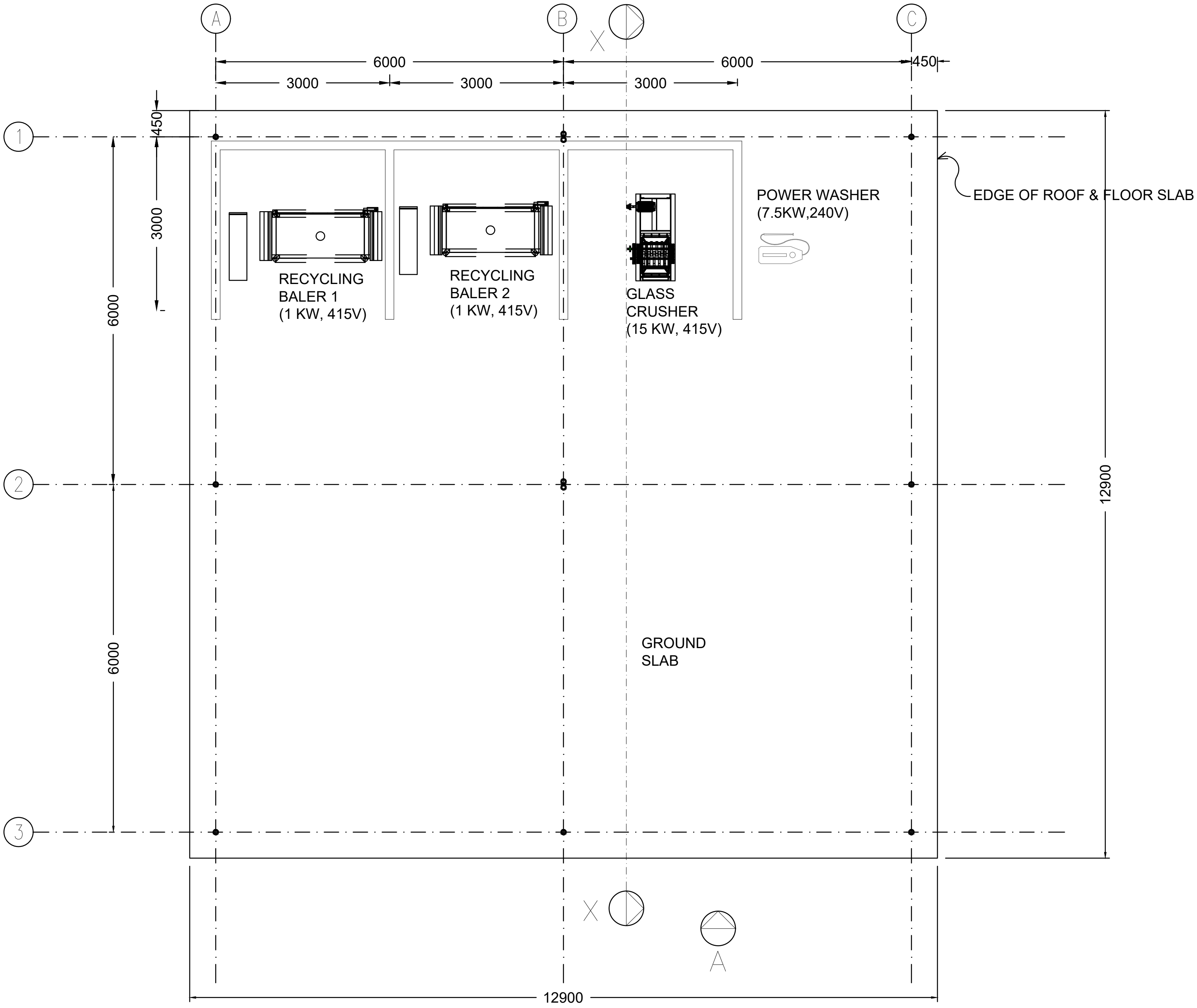
A
B
C
1
2
3
X
X
A
6000
6000
3000
3000
3000
450
450
3000
6000
6000
12900
12900
RECYCLING BALER 1 (1 KW, 415V)
RECYCLING BALER 2 (1 KW, 415V)
GLASS CRUSHER (15 KW, 415V)
POWER WASHER (7.5KW,240V)
EDGE OF ROOF & FLOOR SLAB
GROUND SLAB

GROUND FLOOR LAYOUT PLAN

1:100

Ministry of Environment, Climate Change and Technology
Green Building, Handhuvareehigun
Rep of Maldives

KOCKS INGENIEURE
KOCKS CONSULT GMBH
Stegemannstr. 32-38
Tel: +49 261 1302-400
Email: info@kocks-ing.de

WS
WATER SOLUTIONS PVT LTD
4th FL, M. Niadhurumaage
Tel: +960 3341643
Email: info@water-solutions.biz

Construction of Island Waste Management Centers

SHED
TYPE-A

DESIGNED	KASDARLI
DRAFTED	JALEEL
CHECKED	FAYAZ
PROJECT#	213-98616

AMMENDMENTS

DESIGN

Scale	Paper
AS GIVEN	A4

Drawing No.
2

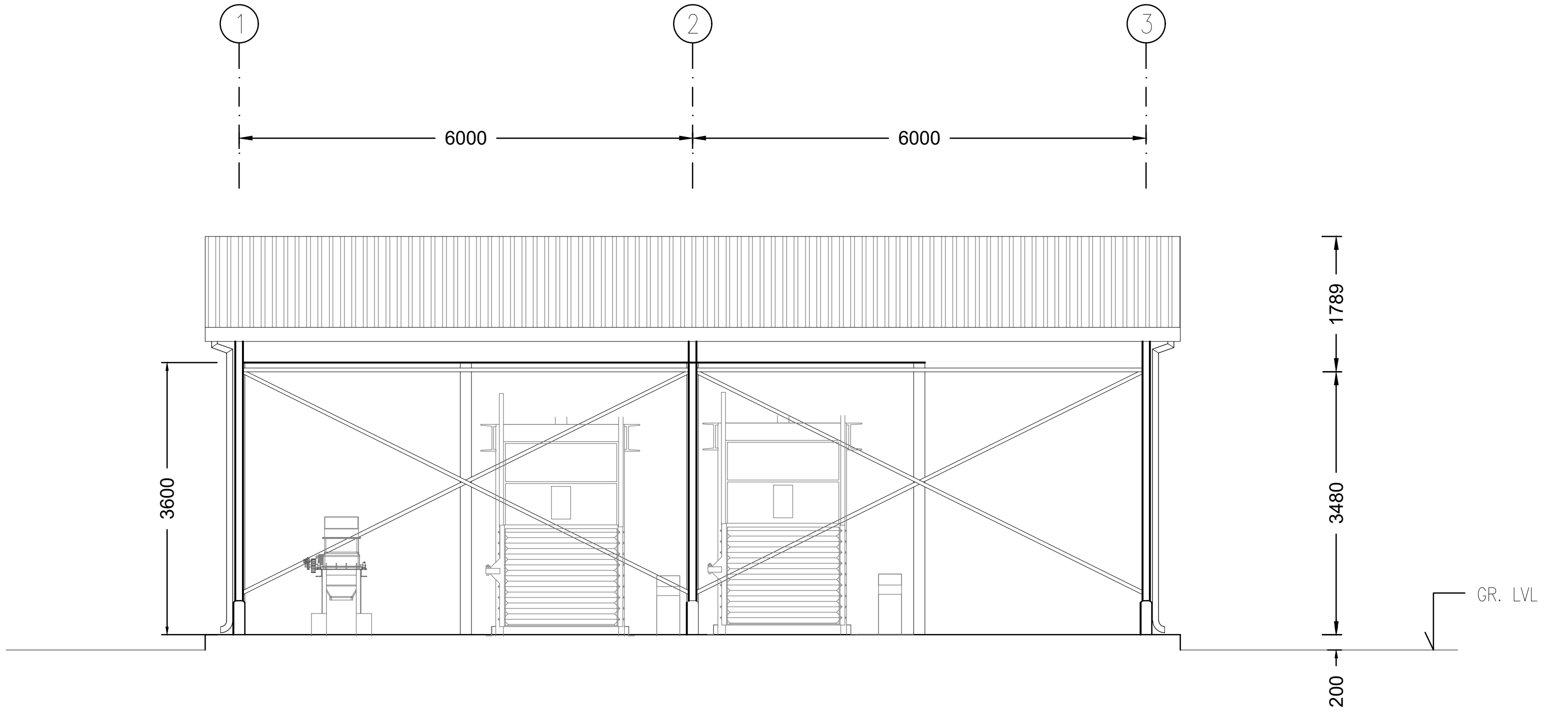

ELEVATION A

1:100

Ministry of Environment, Climate Change and Technology
Green Building, Handhuvareehigun
Rep of Maldives

KOCKS INGENIEURE
KOCKS CONSULT GMBH
Stegemannstr. 32-38
Tel: +49 261 1302-400
Email: info@kocks-ing.de

WATER SOLUTIONS PVT LTD
4th FL, M. Niadhurumaage
Tel: +960 3341643
Email: info@water-solutions.biz

Construction of Island Waste Management Centers

SHED
TYPE-A

DESIGNED	KASDARLI
DRAFTED	JALEEL
CHECKED	FAYAZ
PROJECT#	213-98616

AMMENDMENTS

DESIGN

Scale	Paper
AS GIVEN	A4

Drawing No.
3

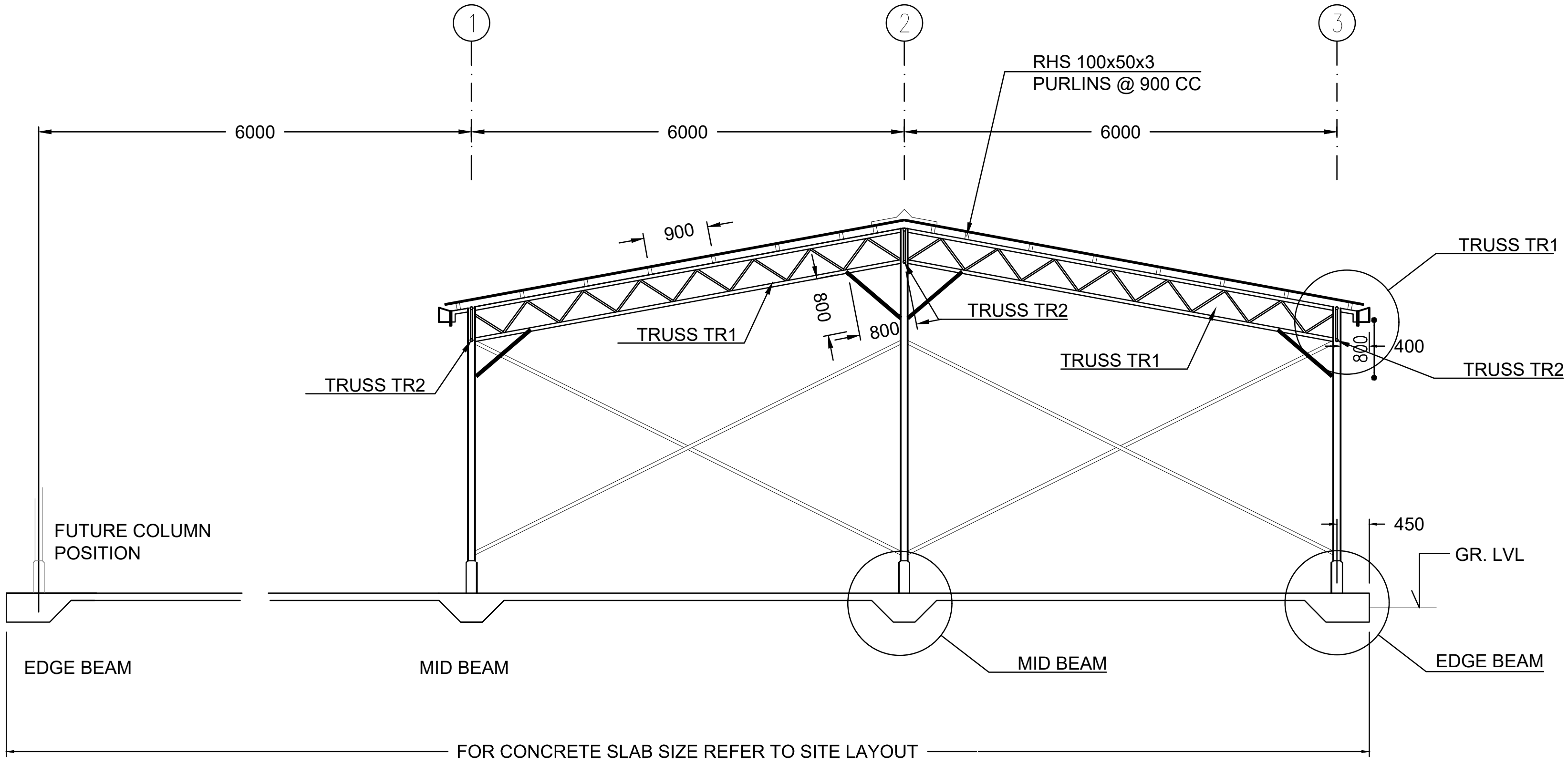
1
2
3
6000
6000
6000
RHS 100x50x3
PURLINS @ 900 CC
900
800
800
TRUSS TR1
TRUSS TR2
TRUSS TR1
TRUSS TR2
TRUSS TR1
TRUSS TR2
400
800
450
GR. LVL
FUTURE COLUMN
POSITION
EDGE BEAM
MID BEAM
MID BEAM
EDGE BEAM
FOR CONCRETE SLAB SIZE REFER TO SITE LAYOUT

SECTION X-X

1:100

Ministry of Environment, Climate Change and Technology
Green Building, Handhuvareehigun
Rep of Maldives

KOCKS INGENIEURE
KOCKS CONSULT GMBH
Stegemannstr. 32-38
Tel: +49 261 1302-400
Email: info@kocks-ing.de

WATER SOLUTIONS PVT LTD
4th FL, M. Niadhurumaage
Tel: +960 3341643
Email: info@water-solutions.biz

Construction of Island Waste Management Centers

SHED
TYPE-A

DESIGNED	KASDARLI
DRAFTED	JALEEL
CHECKED	FAYAZ
PROJECT#	213-98616

AMMENDMENTS

DESIGN

Scale	Paper
AS GIVEN	A4

Drawing No.
4

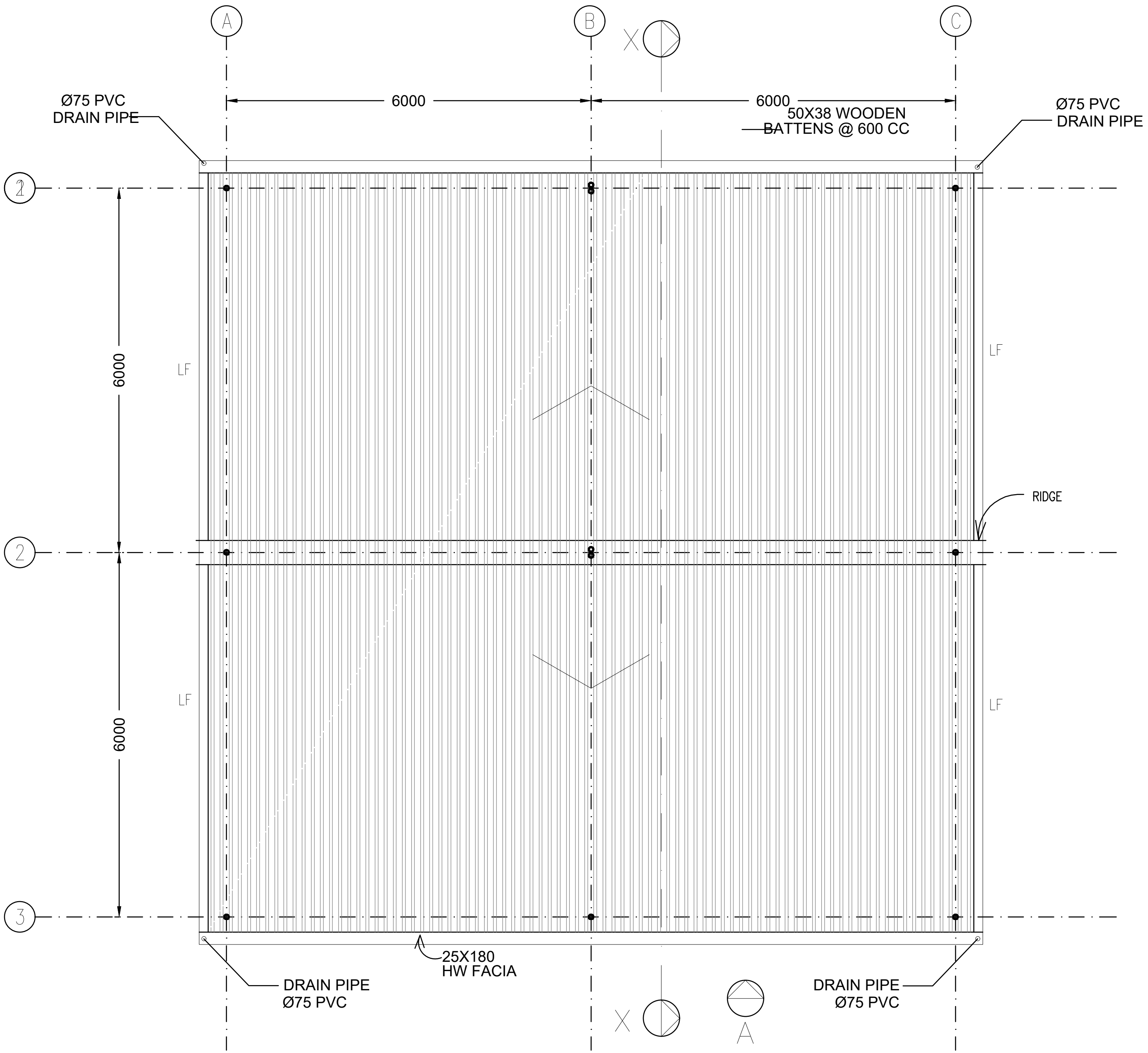
A
B
C
X
1
2
3
6000
6000
6000
6000
Ø75 PVC
DRAIN PIPE
50X38 WOODEN
BATTENS @ 600 CC
Ø75 PVC
DRAIN PIPE
LF
LF
LF
LF
RIDGE
25X180
HW FACIA
DRAIN PIPE
Ø75 PVC
DRAIN PIPE
Ø75 PVC
X
A

ROOF PLAN

1:100

Ministry of Environment, Climate Change and Technology
Green Building, Handhuvareehigun
Rep of Maldives

KOCKS CONSULT GMBH
Stegemannstr. 32-38
Tel: +49 261 1302-400
Email: info@kocks-ing.de

WATER SOLUTIONS PVT LTD
4th FL, M. Niadhurumaage
Tel: +960 3341643
Email: info@water-solutions.biz

Construction of Island Waste Management Centers

SHED
TYPE-A

DESIGNED	KASDARLI
DRAFTED	JALEEL
CHECKED	FAYAZ
PROJECT#	213-98616

AMMENDMENTS

DESIGN

Scale	Paper
AS GIVEN	A4

Drawing No.
5

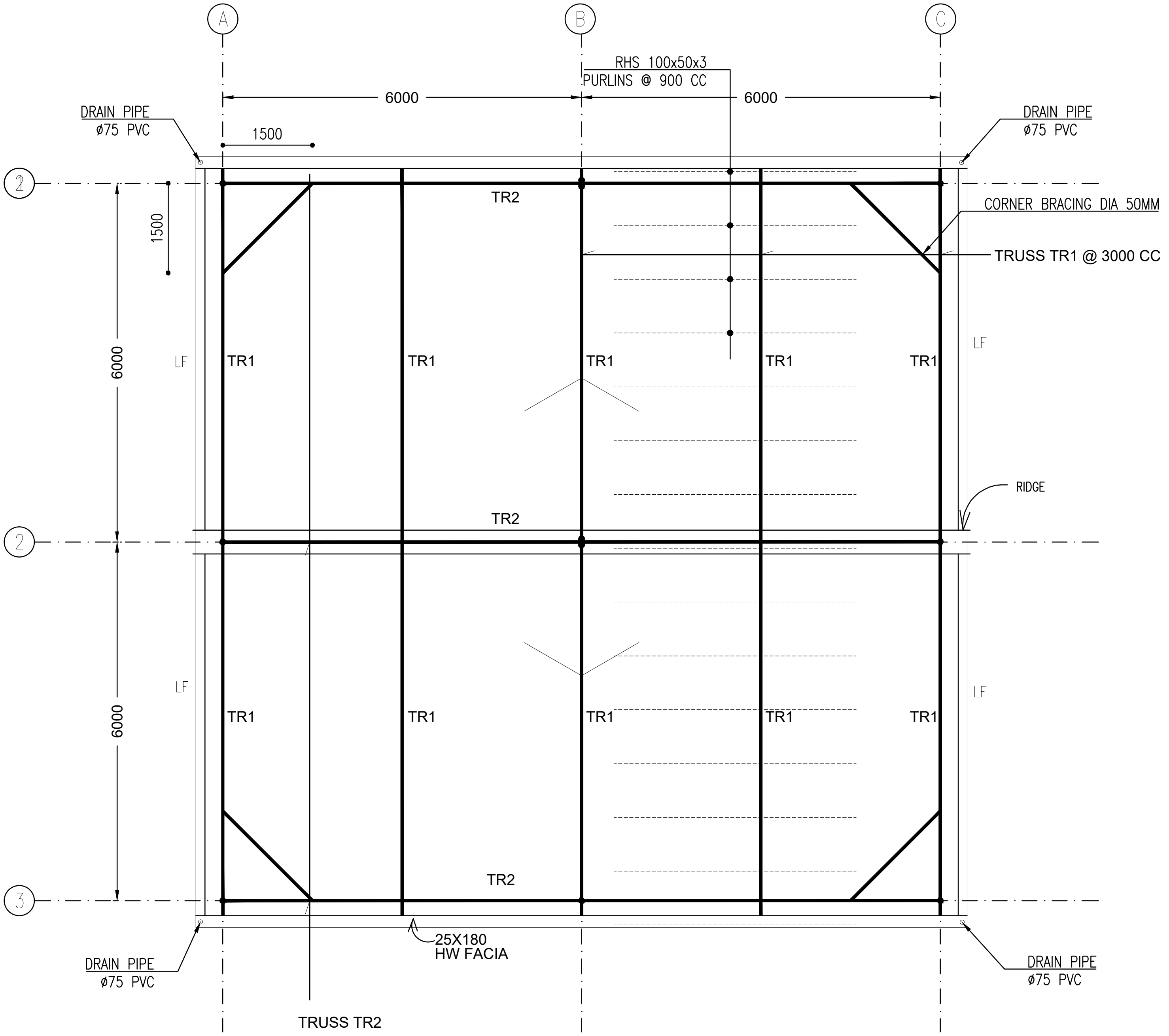
A
B
C
RHS 100x50x3
PURLINS @ 900 CC
6000
6000
DRAIN PIPE
ø75 PVC
1500
DRAIN PIPE
ø75 PVC
2
1500
TR2
CORNER BRACING DIA 50MM
TRUSS TR1 @ 3000 CC
6000
LF
TR1
TR1
TR1
TR1
TR1
LF
RIDGE
TR2
2
LF
6000
TR1
TR1
TR1
TR1
TR1
LF
TR2
3
25X180
HW FACIA
DRAIN PIPE
ø75 PVC
DRAIN PIPE
ø75 PVC
TRUSS TR2

ROOF STRUCTURE

1:100

Ministry of Environment, Climate Change and Technology
Green Building, Handhuvareehigun
Rep of Maldives

KOCKS INGENIEURE
KOCKS CONSULT GMBH
Stegemannstr. 32-38
Tel: +49 261 1302-400
Email: info@kocks-ing.de

WS
WATER SOLUTIONS PVT LTD
4th FL, M. Niadhurumaage
Tel: +960 3341643
Email: info@water-solutions.biz

Construction of Island Waste Management Centers

SHED
TYPE-A

DESIGNED	KASDARLI
DRAFTED	JALEEL
CHECKED	FAYAZ
PROJECT#	213-98616

AMMENDMENTS

DESIGN

Scale	Paper
AS GIVEN	A4

Drawing No.
6

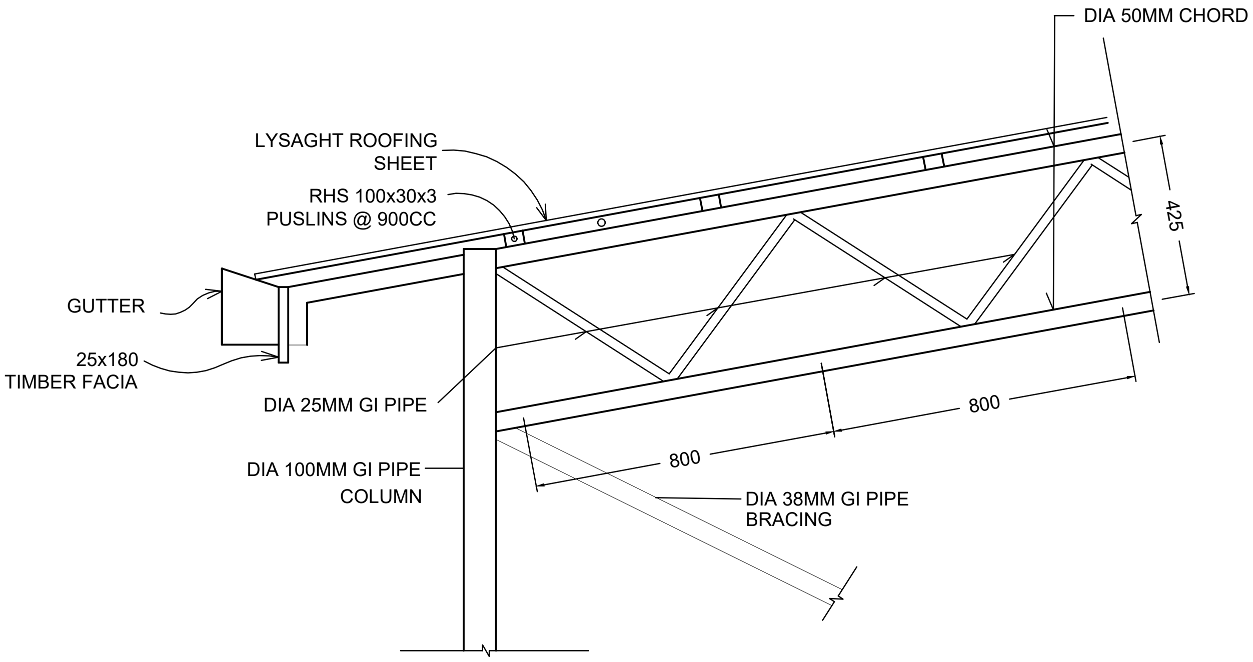
DIA 50MM CHORD
LYSAGHT ROOFING SHEET
RHS 100x30x3 PUSLINS @ 900CC
425
GUTTER
25x180 TIMBER FACIA
DIA 25MM GI PIPE
800
800
DIA 100MM GI PIPE COLUMN
DIA 38MM GI PIPE BRACING

TR-1

1:20

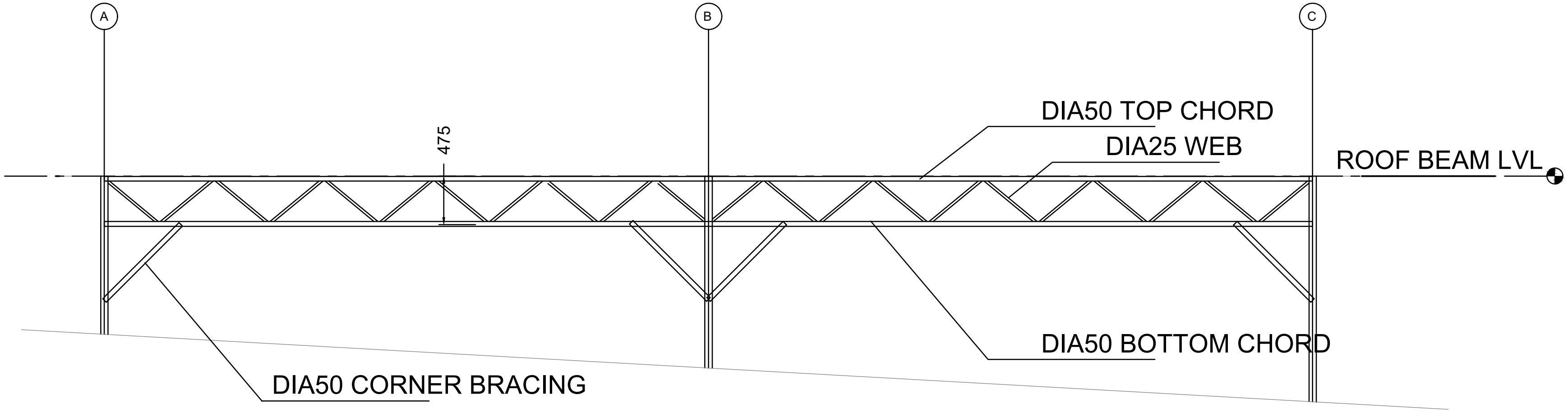
A
B
C
475
DIA50 TOP CHORD
DIA25 WEB
ROOF BEAM LVL
DIA50 BOTTOM CHORD
DIA50 CORNER BRACING

TR-2

Ministry of Environment, Climate
Change and Technology
Green Building, Handhuvareehigun
Rep of Maldives

KOCKS
INGENIEURE
KOCKS CONSULT GMBH
Stegemannstr. 32-38
Tel: +49 261 1302-400
Email: info@kocks-ing.de

WS
WATER SOLUTIONS PVT LTD
4th FL, M. Niadhurumaage
Tel: +960 3341643
Email: info@water-solutions.biz

Construction of Island Waste
Management Centers

SHED
TYPE-A

DESIGNED	KASDARLI
DRAFTED	JALEEL
CHECKED	FAYAZ
PROJECT#	213-98616

AMMENDMENTS

DESIGN

Scale	Paper
AS GIVEN	A4

Drawing No.

7

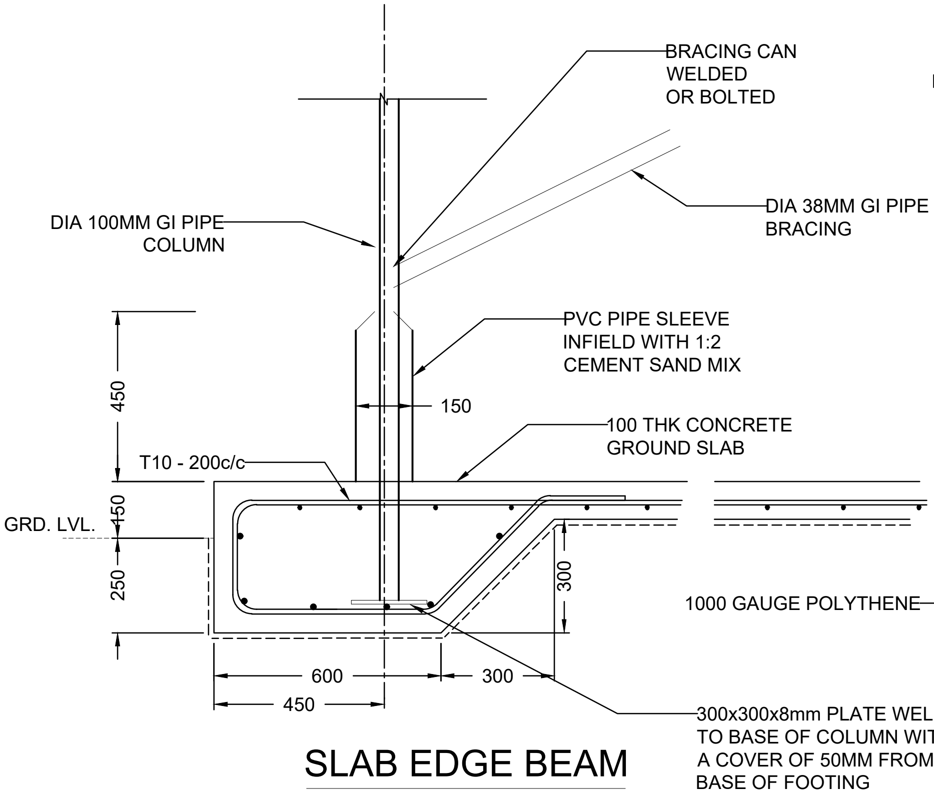
BRACING CAN
WELDED
OR BOLTED
DIA 100MM GI PIPE
COLUMN
DIA 38MM GI PIPE
BRACING
PVC PIPE SLEEVE
INFIELD WITH 1:2
CEMENT SAND MIX
150
450
100 THK CONCRETE
GROUND SLAB
T10 - 200c/c
150
GRD. LVL.
250
300
600
300
450
300x300x8mm PLATE WELDED
TO BASE OF COLUMN WITH
A COVER OF 50MM FROM
BASE OF FOOTING

SLAB EDGE BEAM

1:20

C1

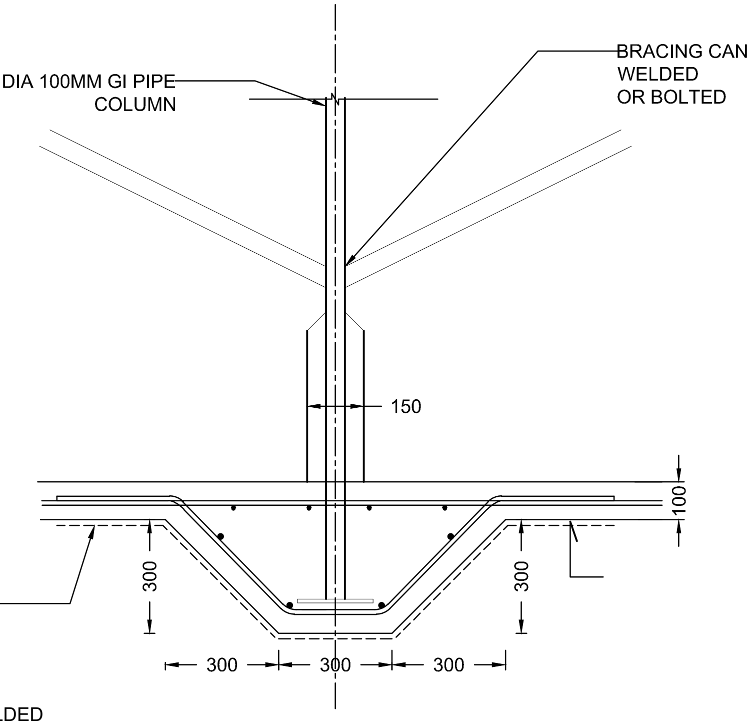
DIA 100MM GI PIPE
COLUMN
BRACING CAN
WELDED
OR BOLTED
150
100
1000 GAUGE POLYTHENE
300
300
300
300
300

SLAB MID BEAM

1:20

C2

TYPICAL CONCRETE SLAB DETAILS - Shed, Hazardous waste, Concrete Slab

1:20

Ministry of Environment, Climate
Change and Technology
Green Building, Handhuvareehigun
Rep of Maldives

KOCKS INGENIEURE
KOCKS CONSULT GMBH
Stegemannstr. 32-38
Tel: +49 261 1302-400
Email: info@kocks-ing.de

WS
WATER SOLUTIONS PVT LTD
4th FL, M. Niadhurumaage
Tel: +960 3341643
Email: info@water-solutions.biz

Construction of Island Waste
Management Centers

SHED
TYPE-A

DESIGNED	KASDARLI
DRAFTED	JALEEL
CHECKED	FAYAZ
PROJECT#	213-98616

AMMENDMENTS

DESIGN

Scale	Paper
AS GIVEN	A4

Drawing No.
8

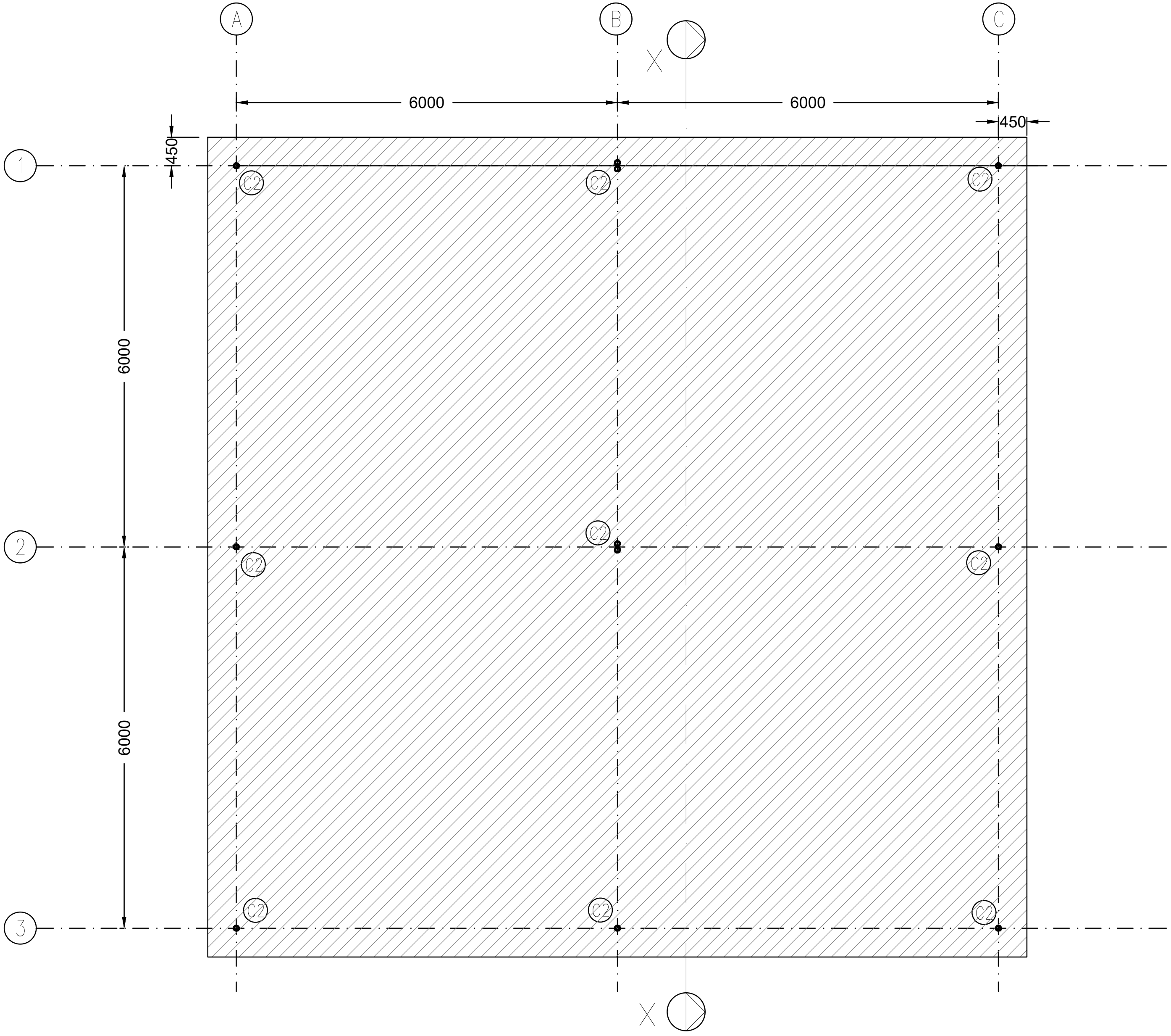

SHED CONCRETE SLAB LAYOUT PLAN

1:100

▨ 100 THICK CONCRETE SLAB ON GROUND
1000 GAUGE POLYTHENE DPM ON
200 COMPACTED HARDCORE
SLAB RFMT: T10@200 BW

Ministry of Environment, Climate Change and Technology
Green Building, Handhuvareehigun
Rep of Maldives

KOCKS INGENIEURE
KOCKS CONSULT GMBH
Stegemannstr. 32-38
Tel: +49 261 1302-400
Email: info@kocks-ing.de

WS
WATER SOLUTIONS PVT LTD
4th FL, M. Niadhurumaage
Tel: +960 3341643
Email: info@water-solutions.biz

Construction of Island Waste Management Centers

SHED
TYPE-A

DESIGNED	KASDARLI
DRAFTED	JALEEL
CHECKED	FAYAZ
PROJECT#	213-98616

AMMENDMENTS

DESIGN

Scale	Paper
AS GIVEN	A4

Drawing No.
9

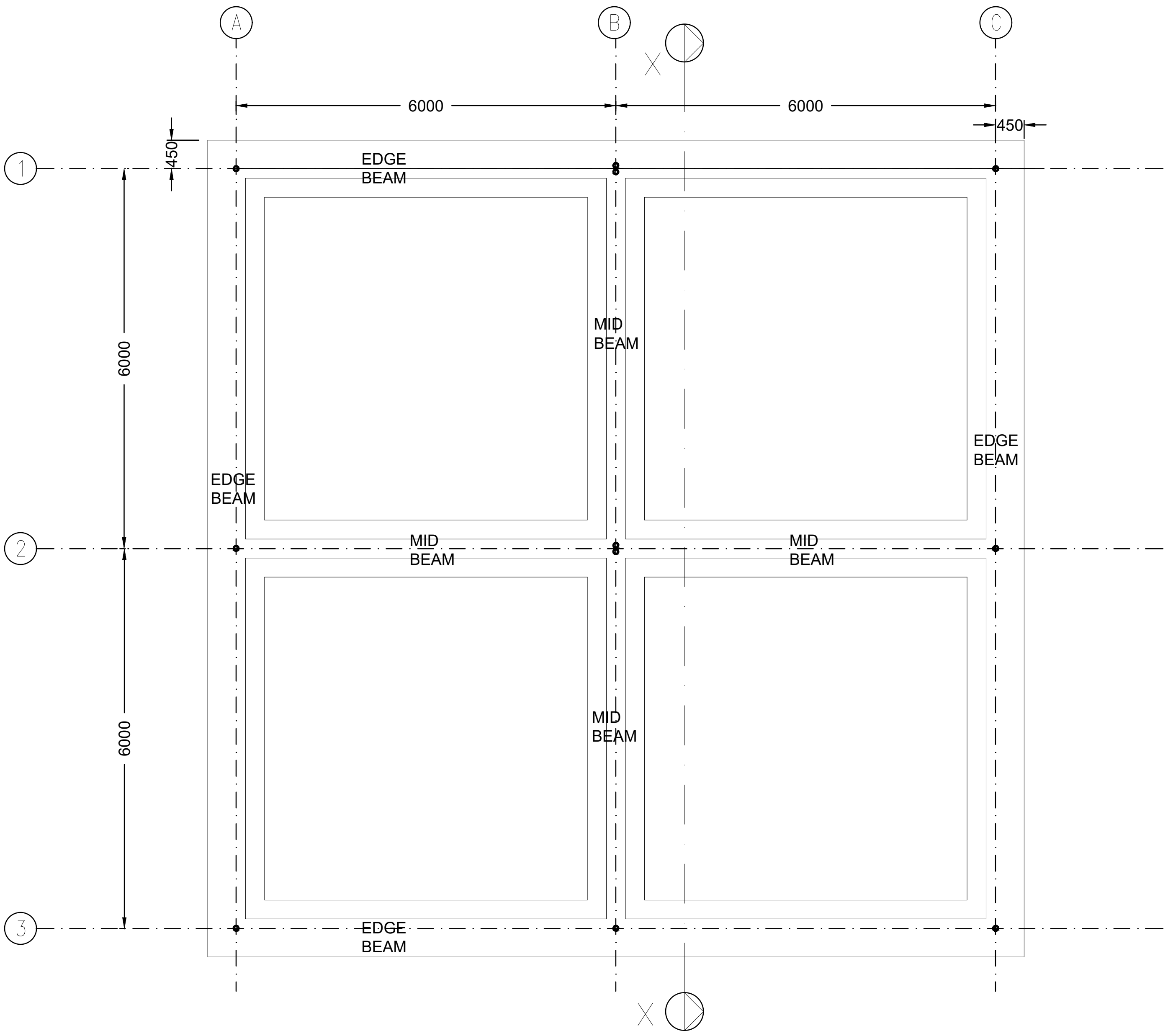
A
B
C
X
6000
6000
450
450
1
2
3
6000
6000
EDGE BEAM
MID BEAM
EDGE BEAM
EDGE BEAM
MID BEAM
MID BEAM
MID BEAM
EDGE BEAM
X

SHED CONCRETE BEAM LAYOUT PLAN

1:100

Ministry of Environment, Climate Change and Technology
Green Building, Handhuvareehigun
Rep of Maldives

KOCKS INGENIEURE
KOCKS CONSULT GMBH
Stegemannstr. 32-38
Tel: +49 261 1302-400
Email: info@kocks-ing.de

WATER SOLUTIONS PVT LTD
4th FL, M. Niadhurumaage
Tel: +960 3341643
Email: info@water-solutions.biz

Construction of Island Waste Management Centers

SHED
TYPE-A

DESIGNED	KASDARLI
DRAFTED	JALEEL
CHECKED	FAYAZ
PROJECT#	213-98616

AMMENDMENTS

DESIGN

Scale	Paper
AS GIVEN	A4

Drawing No.
10

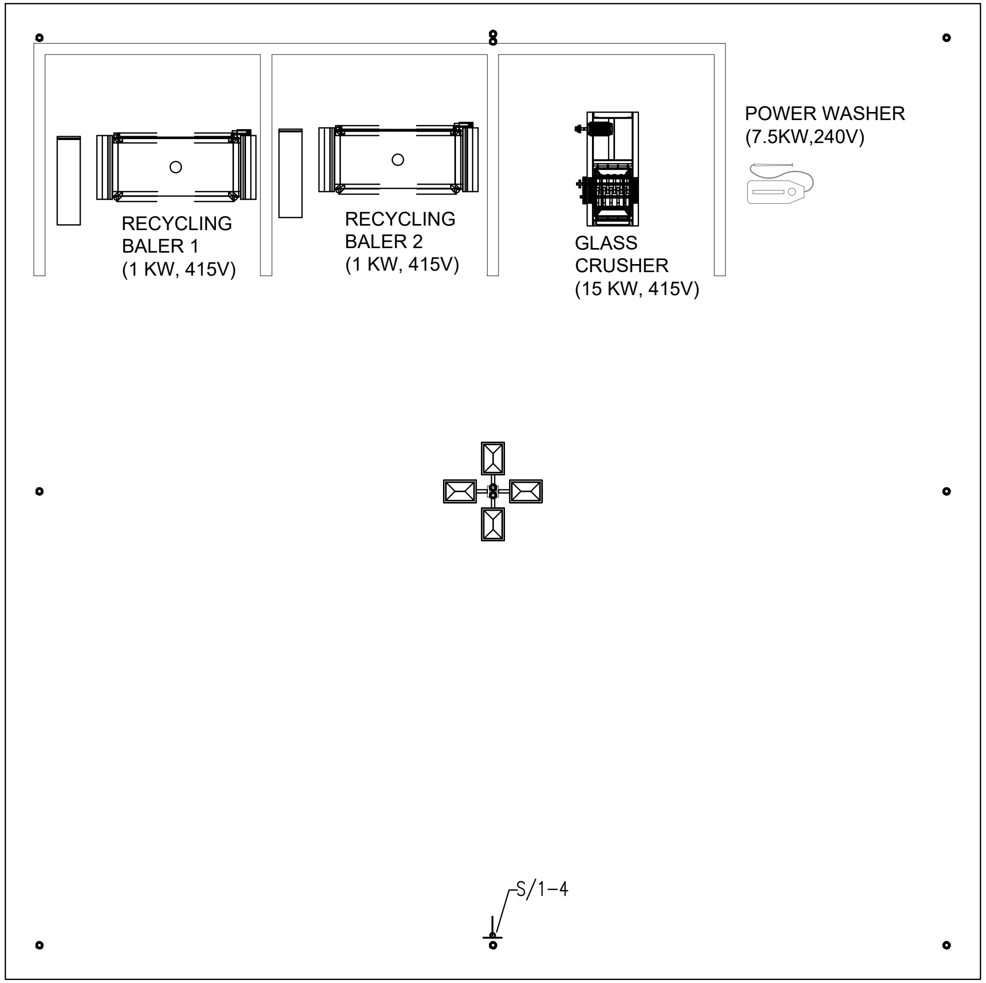
RECYCLING
BALER 1
(1 KW, 415V)
RECYCLING
BALER 2
(1 KW, 415V)
GLASS
CRUSHER
(15 KW, 415V)
POWER WASHER
(7.5KW,240V)
S/1-4

LIGHTING & POWER LAYOUT

1:100

ELECTRICAL LEGEND

⊠	MERCURY FLOOD LED LIGHT
⊢	ONE-WAY SWITCH (SINGLE GANG)
●	WATERPROOF WALL SOCKET OUTLET (SINGLE GANG) 1.2 AFFL
●+	WATERPROOF SERVICE SOCKET OUTLET (SINGLE GANG) 1.8 AFFL
◪	D-BOARD

NOTE:

ALL HEIGHTS ARE FROM FINISHED FLOOR LEVEL

ALL WALL SOCKET OUTLETS ARE 0.3M AFFL EXCEPT WHERE STATED

ALL LIGHT SWITCHES ARE AT 1.2M AFFL

ALL MACHINERY WILL BE SUPPLIED BY CLIENT

Ministry of Environment, Climate Change and Technology
Green Building, Handhuvareehigun
Rep of Maldives

KOCKS INGENIEURE
KOCKS CONSULT GMBH
Stegemannstr. 32-38
Tel: +49 261 1302-400
Email: info@kocks-ing.de

WS
WATER SOLUTIONS PVT LTD
4th FL, M. Niadhurumaage
Tel: +960 3341643
Email: info@water-solutions.biz

Construction of Island Waste Management Centers

SHED
TYPE-A

DESIGNED	KASDARLI
DRAFTED	JALEEL
CHECKED	FAYAZ
PROJECT#	213-98616

AMMENDMENTS

DESIGN

Scale	Paper
AS GIVEN	A4

Drawing No.
11

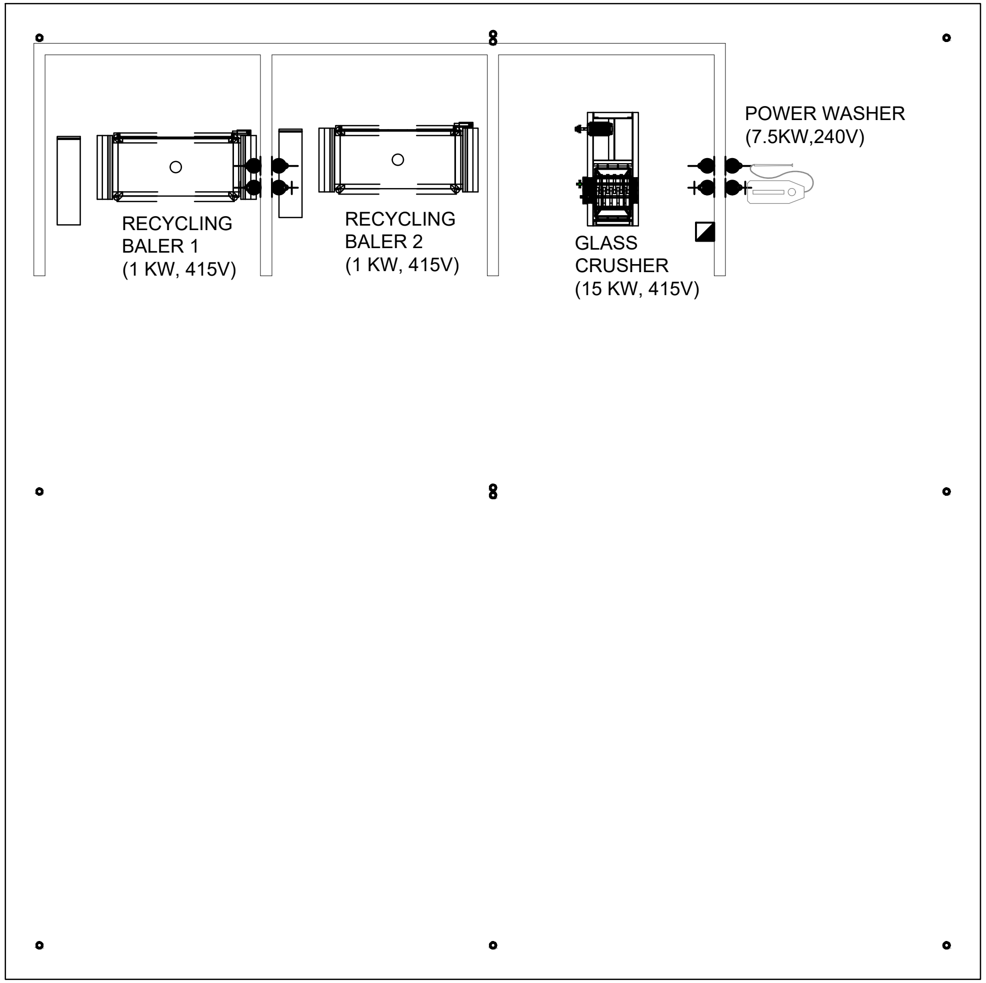
RECYCLING BALER 1 (1 KW, 415V)
RECYCLING BALER 2 (1 KW, 415V)
GLASS CRUSHER (15 KW, 415V)
POWER WASHER (7.5KW,240V)

LIGHTING & POWER LAYOUT

1:100

ELECTRICAL LEGEND

⊠	MERCURY FLOOD LED LIGHT
⊢	ONE-WAY SWITCH (SINGLE GANG)
●	WATERPROOF WALL SOCKET OUTLET (SINGLE GANG) 1.2 AFFL
●+	WATERPROOF SERVICE SOCKET OUTLET (SINGLE GANG)
◩	D-BOARD

NOTE:

ALL HEIGHTS ARE FROM FINISHED FLOOR LEVEL

ALL WALL SOCKET OUTLETS ARE 0.3M AFFL
EXCEPT WHERE STATED

ALL LIGHT SWITCHES ARE AT 1.2M AFFL

Ministry of Environment, Climate Change and Technology
Green Building, Handhuvareehigun
Rep of Maldives

KOCKS INGENIEURE
KOCKS CONSULT GMBH
Stegemannstr. 32-38
Tel: +49 261 1302-400
Email: info@kocks-ing.de

WATER SOLUTIONS PVT LTD
4th FL, M. Niadhurumaage
Tel: +960 3341643
Email: info@water-solutions.biz

Construction of Island Waste Management Centers

SHED
TYPE-A

DESIGNED	KASDARLI
DRAFTED	JALEEL
CHECKED	FAYAZ
PROJECT#	213-98616

AMMENDMENTS

DESIGN

Scale	Paper
AS GIVEN	A4

Drawing No.
12