CONSULTANCY SERVICES FOR SURVEY, DESIGN AND EIA WORKS OF WATER SUPPLY AND SEWERAGE FACILITIES IN 7 ISLANDS, MALDIVES

PAKAGE 6

# SEWERAGE SYSTEM OF L. KUNAHANDHOO ,MALDIVES

For Ministry of National Planning and Housing Infrastructure, Republic of Maldives

EPOCH
ASSOCIATES

**T**: +960 333 3528 **E**: info@epoch.associates **W**: wwww.epoch.associates
**A**: 4A, 4th Floor, M. Ahigasdhoshuge, Fareedhee Magu Male' Republic of Maldives

FEEDBACK INFRA
Making Infrastructure Happen

# CONTENTS

**OVERALL LAYOUT**

| | |
|---|---|
| Sewerage Network Layout | A-(1) |
| Sewerage Network Catchment Areas | A-(2) |
| Sewerage Network Zone Layout | A-(3) |
| Sewerage Network Layout - Zone 01 | 04 |
| Sewerage Network Layout - Zone 02 | 05 |
| Sewerage Network Layout - Zone 03 | 06 |
| Sewerage Network Layout - Zone 04 | 07 |
| Sewerage Network Layout - Zone 05 | 08 |
| Sewerage Network Layout - Zone 06 | 09 |
| Sewerage Network Layout - Zone 07 | 10 |
| Sewerage Network Layout - Zone 08 | 11 |
| Sewerage Network Layout - Zone 09 | 12 |
| Sewerage Network Layout - Zone 10 | 13 |

**DETAILED DRAWINGS FOR SPECIFIC COMPONENTS**

| | |
|---|---|
| PUMP STATION 1 LAYOUT | W-(1) |
| PUMP STATION 2 LAYOUT | W-(2) |
| PUMP STATION 3 LAYOUT | W-(3) |
| PUMP STATION 4 LAYOUT | W-(24) |
| PUMP STATION 5 LAYOUT | W-(25) |
| STP LAYOUT | W-(4) |
| PUMP STATION DETAILS | W-(5), W(6), W(7) |
| GATE DETAILS | W-(8) |
| PUMP STATION BOUNDARY WALL DETAILS | W-(9) |
| VENT STACK DETAILS | W-(10) |
| VENT STACK AND AIR BLOWER DETAILS | W-(11) |
| CONTROL PANEL BOARD DETAILS | W-(12) |
| LIGHT POST DETAILS | W-(13) |
| TRENCH & BEDDING DETAILS | W-(14) |
| MAINTENANCE SHAFT (MH) DETAILS | W-(15) |
| TYPICAL MANHOLE BASE DETAILS | W-(16) |
| CLEANOUT DETAILS | W-(17) |
| TYPICAL HOUSE CONNECTION DETAILS | W-(18) |
| THRUST BLOCK DETAILS | W-(19) |
| BALLAST BLOCK DETAILS | W-(20) |
| T-HEAD DIFFUSER DETAILS | W-(21) |
| SEA OUTFALL DETAILS | W-(22) |
| PRESSURE NETWORK LAYOUT | W-(23) |
| PROFILE DIAGRAMS - PUMP STATION 01 | PS1-01 - PS1-11 |
| PROFILE DIAGRAMS - PUMP STATION 02 | PS2-01 - PS2-08 |
| PROFILE DIAGRAMS - PUMP STATION 03 | PS3-01 - PS3-12 |

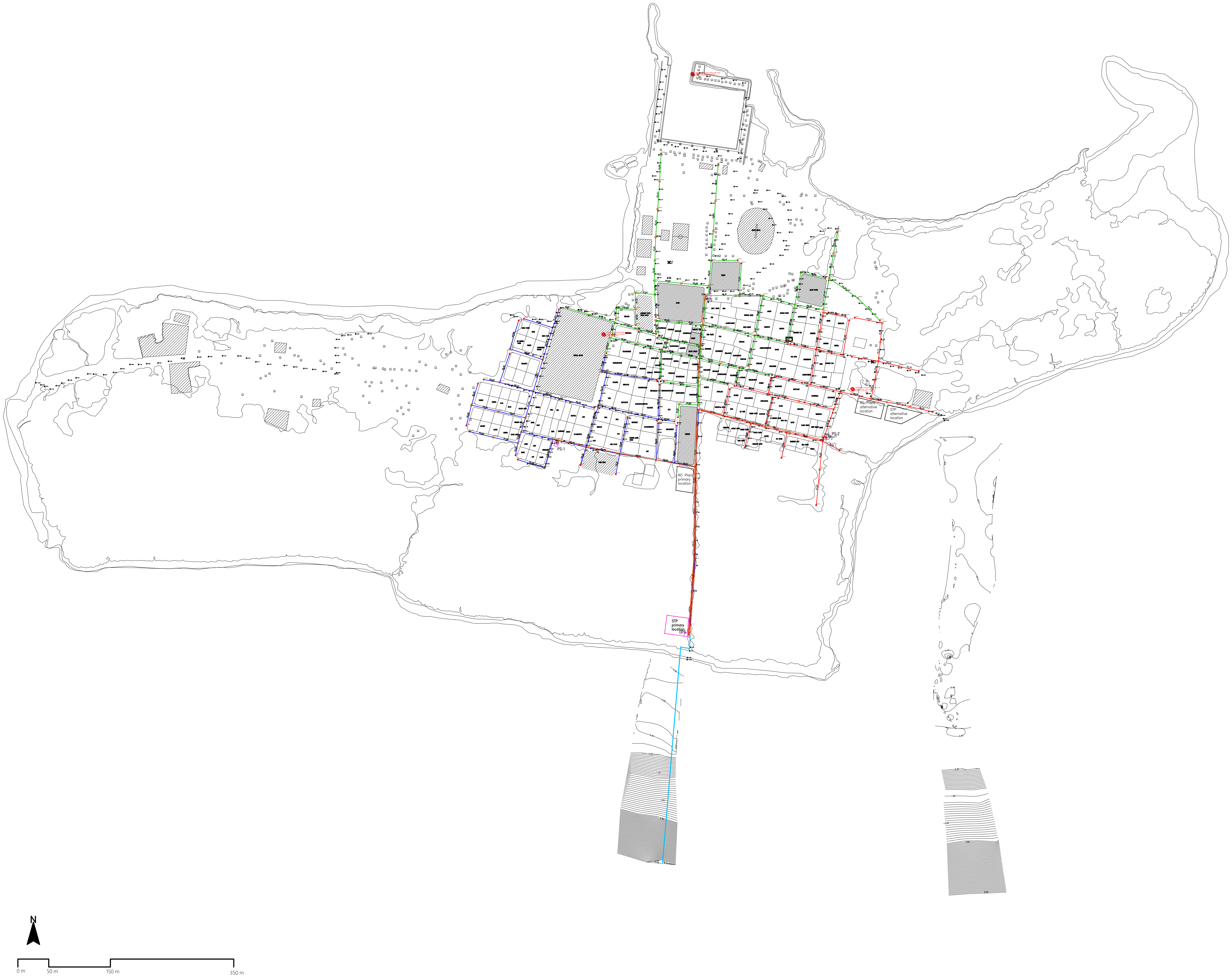

L. KUNAHANDHOO SEWERAGE SYSTEM - DETAILED DESIGN OF SEWERAGE NETWORK LAYOUT

1:6000

N
L. KUNAHANDHOO SEWERAGE SYSTEM - DETAILED DESIGN OF SEWERAGE NETWORK LAYOUT
1:6000

## Legend

| | | |
|---|---|---|
| 🟦 | 160mm Ø uPVC PS1 Gravity Sewer Main (SN4, SDR41) | – 2284 m |
| 🟥 | 160mm Ø uPVC PS2 Gravity Sewer Main (SN4, SDR41) | – 1634 m |
| 🟩 | 160mm Ø uPVC PS3 Gravity Sewer Main (SN4, SDR41) | – 2667 m |
| 🟧 | 110 mm Ø HDPE Pumping Main (PE100, PN16, SDR11) | – 1623 m |
| 🟦 | 160 mm Ø HDPE Sea Outfall Pipe (PE100, PN16, SDR11) | – 56 m on land<br>– 335 m offshore<br>– 391 m total |
| MH | 600mm Ø PE/PP Maintenance Shaft | – 103 nos |
| ● | 160mmø uPVC Clean Out | – 64 nos |
| ⊕ | PERMANENT SURVEY MARK PSM_0099<br>318628.0850E, 197674.0730N<br>1.608m From MSL | |
| ⊕ | PERMANENT SURVEY MARK PSM_0100<br>318485.463E, 197250.969N<br>0.370m From MSL | |
| ⊕ | PERMANENT SURVEY MARK PSM_0101<br>318884.223E, 197157.653N<br>0.485m From MSL | |

NOTES

1. ALL LEVELS SHOWN ARE IN METERS.
2. ALL LEVELS SHOWN ARE FROM MEAN SEA LEVEL
3. THIS DRAWING TO BE READ IN CONJUNCTION WITH ALL OTHER RELEVANT DRAWINGS AND SPECIFICATIONS.
4. ALL GRAVITY SEWER PIPES SHALL BE UPVC TO BS EN1401–1: 2019.
5. ALL GRAVITY SEWER MAINS SHALL BE 160MM DIA UPVC OF WALL THICKNESS & STIFFNESS RATED TO SN4 & SDR41.
6. ALL GRAVITY HOUSE LATERALS SHALL BE 110MM DIA UPVC OF WALL THICKNESS & STIFFNESS RATED TO SN4 & SDR41.
7. ALL GRAVITY SEWER MAINS SHALL HAVE MINIMUM 0.4% SLOPE.
8. ALL GRAVITY SEWER PIPES SHALL BE JOINTED USING RUBBER RING PUSH FIT JOINTING METHOD & RUBBER RINGS COMPLY WITH BS 2494 (TYP2).
9. CONNECTION FROM THE HOUSEHOLD TO THE INSPECTION CHAMBER IS NOT INCLUDED. PROVISION SHALL BE GIVEN IN IC FOR MULTIPLE CONNECTIONS.
10. ALL SEWER PIPES SHALL BE BURIED UNDER EARTH COVER OF MINIMUM 0.6 METERS.
11. CATCHMENT OVER FLOW LINKS ARE TO BE CONNECTED AS INDICATED BELOW:
    - a) CO3–05 and MH1–26
    - b) CO3–17 and CO3–12
    - c) CO3–21 and MH3–02
    - d) CO2–11 and MH1–14

| REV. NO. | Date | Revision Description | Drawn | Chkd | Appd. |
|---|---|---|---|---|---|
| | | | | | |
| | | | | | |
| | | | | | |
| | | | | | |
| | | | | | |

Title:

**Consultancy Services for Survey, Design and EIA works of Water Supply and Sewerage Facilities in 7 islands, Maldives - Package 6**

Sub Title:

**Sewerage System in GA. Nilandhoo**

Client:

**Ministry of National Planning, Housing and Infrastructure, Republic of Maldives**

EPOCH ASSOCIATES
**T**: +960 333 3528
**E**: info@epoch.associates
**W**: wwww.epoch.associates
**A**: G. Rosary West,
Husnuheenaa Magu, Male', Maldives

FEEDBACK INFRA
Making Infrastructure Happen

| | | | |
|---|---|---|---|
| Drawn: | F.I.A. | Checked: | M.S.S. |
| Designed: | F.I.A. | Approved: | I.W. |
| Date: | Sep 2020 | SCALE (A3): | 1:6000 |
| Project No: | EP-WS/2019/06 | | |
| Rev: | | Page: | A-(1) |

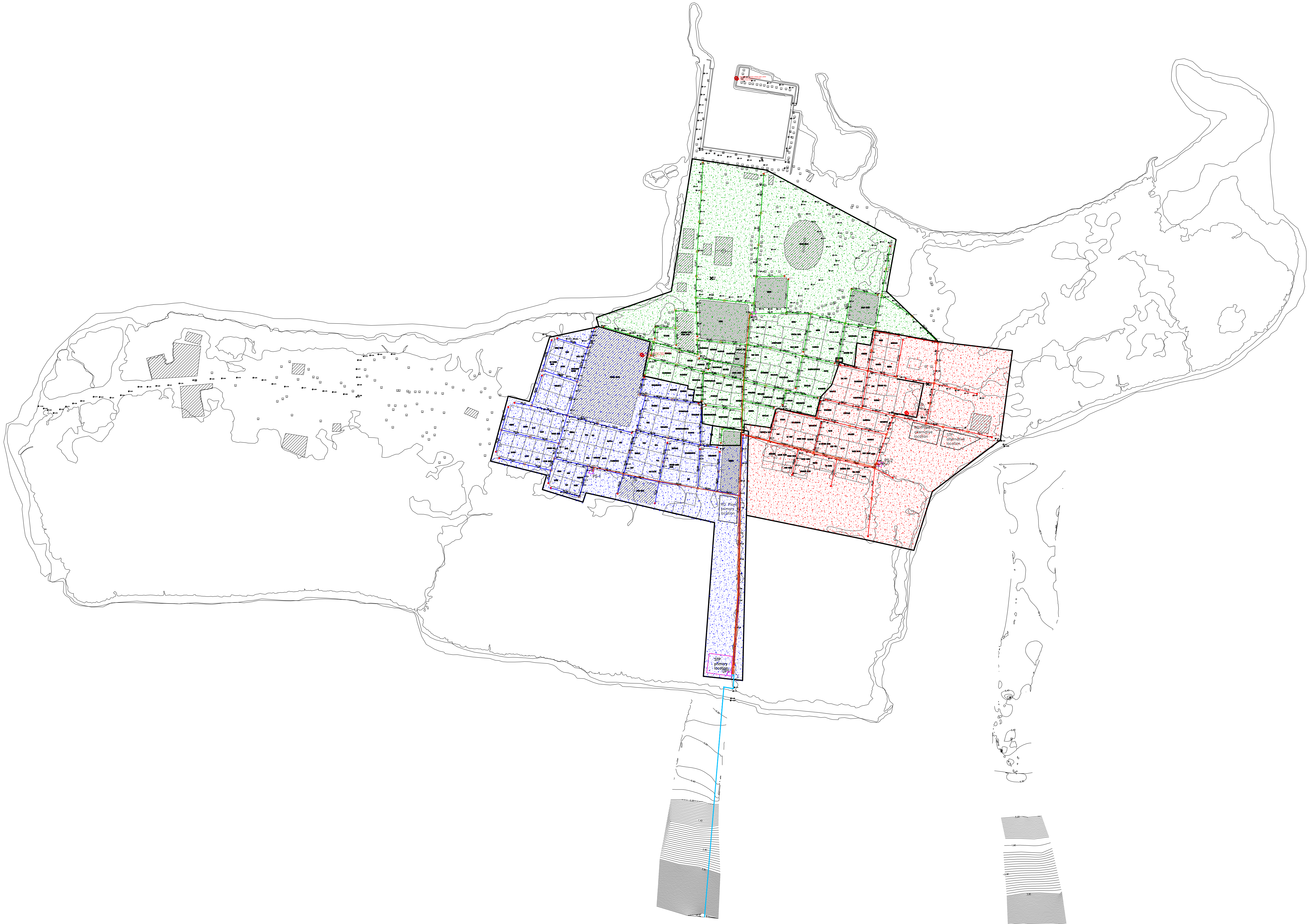
RO Plant primary location
RO Plant alternative location
STP alternative location
PS-2
STP primary location
DPS

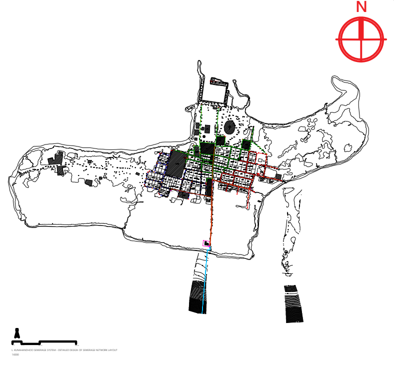

**Legend**

🟦 PS–1 Catchment Area

🟥 PS–2 Catchment Area

🟩 PS–3 Catchment Area

| REV. NO. | Date | Revision Description | Drawn | Chkd | Appd. |
|---|---|---|---|---|---|
| | | | | | |
| | | | | | |
| | | | | | |
| | | | | | |
| | | | | | |

Title:

**Consultancy Services for Survey, Design and EIA works of Water Supply and Sewerage Facilities in 7 islands, Maldives - Package 6**

Sub Title:

**Sewerage System in GA. Nilandhoo**

Client:

**Ministry of National Planning, Housing and Infrastructure, Republic of Maldives**

EPOCH ASSOCIATES
**T**: +960 333 3528
**E**: info@epoch.associates
**W**: wwww.epoch.associates
**A**: G. Rosary West,
Husnuheenaa Magu, Male', Maldives

FEEDBACK INFRA
Making Infrastructure Happen

| | | | |
|---|---|---|---|
| Drawn: | F.I.A. | Checked: | M.S.S. |
| Designed: | F.I.A. | Approved: | I.W. |
| Date: | Sep 2020 | SCALE (A3): | 1:6000 |

Project No: EP-WS/2019/06

Rev:

Page: A-(2)

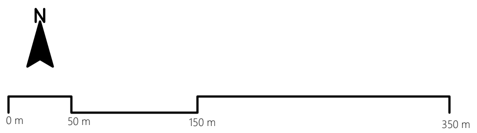
N
0 m
50 m
150 m
350 m

L. KUNAHANDHOO SEWERAGE SYSTEM - SEWERAGE NETWORK CATCHMENT AREAS

1:6000

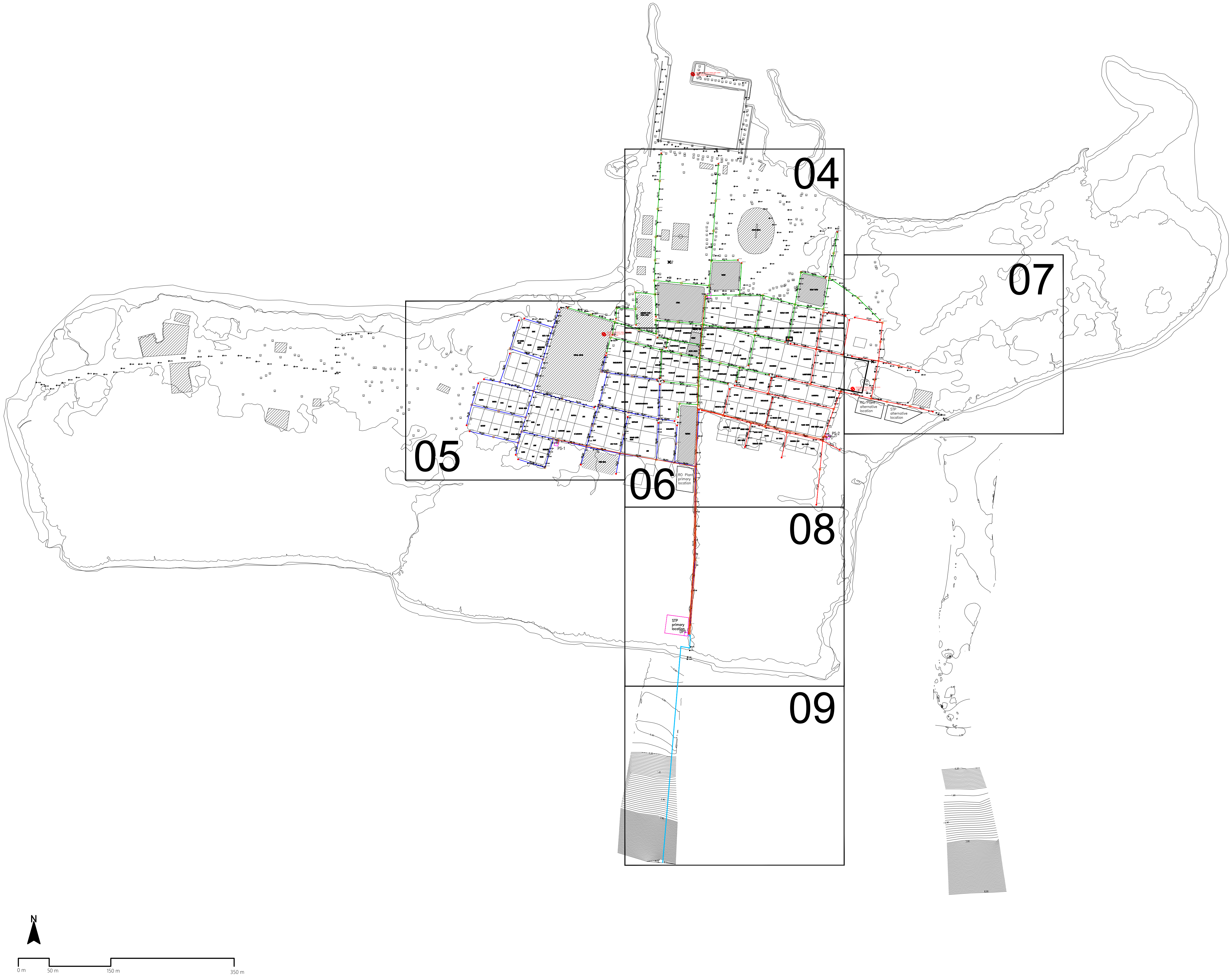
04
05
06
07
08
09
PS-1
PS-2
RO Plant primary location
RO Plant alternative location
STP alternative location
STP primary location
N
0 m
50 m
150 m
350 m

L. KUNAHANDHOO SEWERAGE SYSTEM - SEWERAGE NETWORK ZONE LAYOUT
1:6000

N
L. KUNAHANDHOO SEWERAGE SYSTEM - DETAILED DESIGN OF SEWERAGE NETWORK LAYOUT
1:6000

**Legend**

| | |
|---|---|
| 🟦 | 160mm Ø uPVC PS1 Gravity Sewer Main (SN4, SDR41) |
| 🟥 | 160mm Ø uPVC PS2 Gravity Sewer Main (SN4, SDR41) |
| 🟩 | 160mm Ø uPVC PS3 Gravity Sewer Main (SN4, SDR41) |
| MH | 600mm Ø PE/PP Maintenance Shaft |
| ● | 160mmø uPVC Clean Out |
| 🟧 | 160 mm Ø HDPE Pumping Main (PE100, PN16, SDR11) |
| 🟦 | 160 mm Ø HDPE Sea Outfall Pipe (PE100, PN16, SDR11) |

| REV. NO. | Date | Revision Description | Drawn | Chkd | Appd. |
|---|---|---|---|---|---|
| | | | | | |

Title:
**Consultancy Services for Survey, Design and EIA works of Water Supply and Sewerage Facilities in 7 islands, Maldives - Package 6**

Sub Title:
**Sewerage System in GA. Nilandhoo**

Client:
**Ministry of National Planning, Housing and Infrastructure, Republic of Maldives**

EPOCH ASSOCIATES
T: +960 333 3528
E: info@epoch.associates
W: wwww.epoch.associates
A: G. Rosary West,
Husnuheenaa Magu, Male', Maldives

FEEDBACK INFRA
Making Infrastructure Happen

| | | | |
|---|---|---|---|
| Drawn: | F.I.A. | Checked: | M.S.S. |
| Designed: | F.I.A. | Approved: | I.W. |
| Date: | Sep 2020 | SCALE (A3): | 1:6000 |
| Project No: | EP-WS/2019/06 | | |
| Rev: | | Page: | A-(3) |

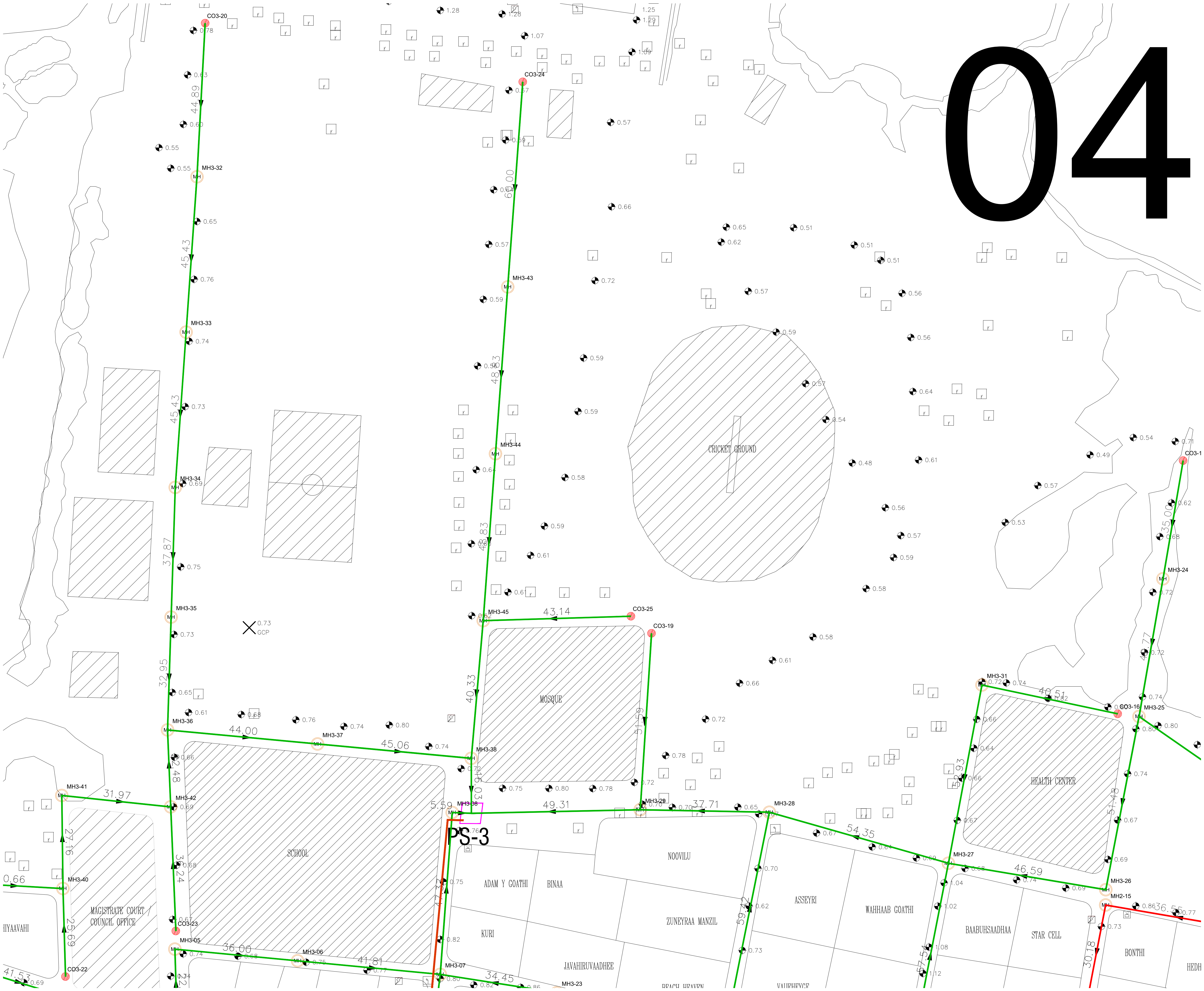
04
CO3-20
MH3-32
MH3-33
MH3-34
MH3-35
MH3-36
MH3-37
MH3-38
MH3-39
MH3-40
MH3-41
MH3-42
MH3-43
MH3-44
MH3-45
MH3-05
MH3-06
MH3-07
MH3-23
MH3-24
MH3-25
MH3-26
MH3-27
MH3-28
MH3-29
MH3-31
MH2-15
CO3-24
CO3-25
CO3-19
CO3-1
CO3-16
CO3-22
CO3-23
PS-3
44.89
45.43
45.43
37.87
32.95
44.00
45.06
60.00
48.03
48.83
40.33
43.14
51.59
49.31
37.71
54.35
46.59
40.51
51.48
35.00
49.77
31.97
27.16
25.69
36.00
41.81
34.45
36.56
30.18
59.42
57.54
5.59
0.73 GCP
CRICKET GROUND
MOSQUE
SCHOOL
HEALTH CENTER
MAGISTRATE COURT / COUNCIL OFFICE
NOOVILU
ADAM Y GOATHI
BINAA
KURI
JAVAHIRUVAADHEE
ZUNEYRAA MANZIL
ASSEYRI
WAHHAAB GOATHI
BAABUHSAADHAA
STAR CELL
BONTHI
HIYAAVAHI
BEACH HEAVEN
HEDH

N
L. KUNAHANDHOO SEWERAGE SYSTEM - DETAILED DESIGN OF SEWERAGE NETWORK LAYOUT
1:6000

## Legend

| | |
|---|---|
| 🟦 | 160mm Ø uPVC PS1 Gravity Sewer Main (SN4, SDR41) |
| 🟥 | 160mm Ø uPVC PS2 Gravity Sewer Main (SN4, SDR41) |
| 🟩 | 160mm Ø uPVC PS3 Gravity Sewer Main (SN4, SDR41) |
| MH | 600mm Ø PE/PP Maintenance Shaft |
| ● | 160mmø uPVC Clean Out |
| 🟧 | 160 mm Ø HDPE Pumping Main (PE100, PN16, SDR11) |
| 🟦 | 160 mm Ø HDPE Sea Outfall Pipe (PE100, PN16, SDR11) |

| REV. NO. | Date | Revision Description | Drawn | Chkd | Appd. |
|---|---|---|---|---|---|
| | | | | | |

Title:

# Consultancy Services for Survey, Design and EIA works of Water Supply and Sewerage Facilities in 7 islands, Maldives - Package 6

Sub Title:

## Sewerage System in GA. Nilandhoo

Client:

**Ministry of National Planning, Housing and Infrastructure, Republic of Maldives**

EPOCH ASSOCIATES

**T**: +960 333 3528
**E**: info@epoch.associates
**W**: wwww.epoch.associates
**A**: G. Rosary West,
Husnuheenaa Magu, Male', Maldives

FEEDBACK INFRA
Making Infrastructure Happen

| | | | |
|---|---|---|---|
| Drawn: | F.I.A. | Checked: | M.S.S. |
| Designed: | F.I.A. | Approved: | I.W. |
| Date: | Sep 2020 | SCALE (A3): | 1:1000 |
| Project No: | EP-WS/2019/06 | | |
| Rev: | | Page: | (4) |

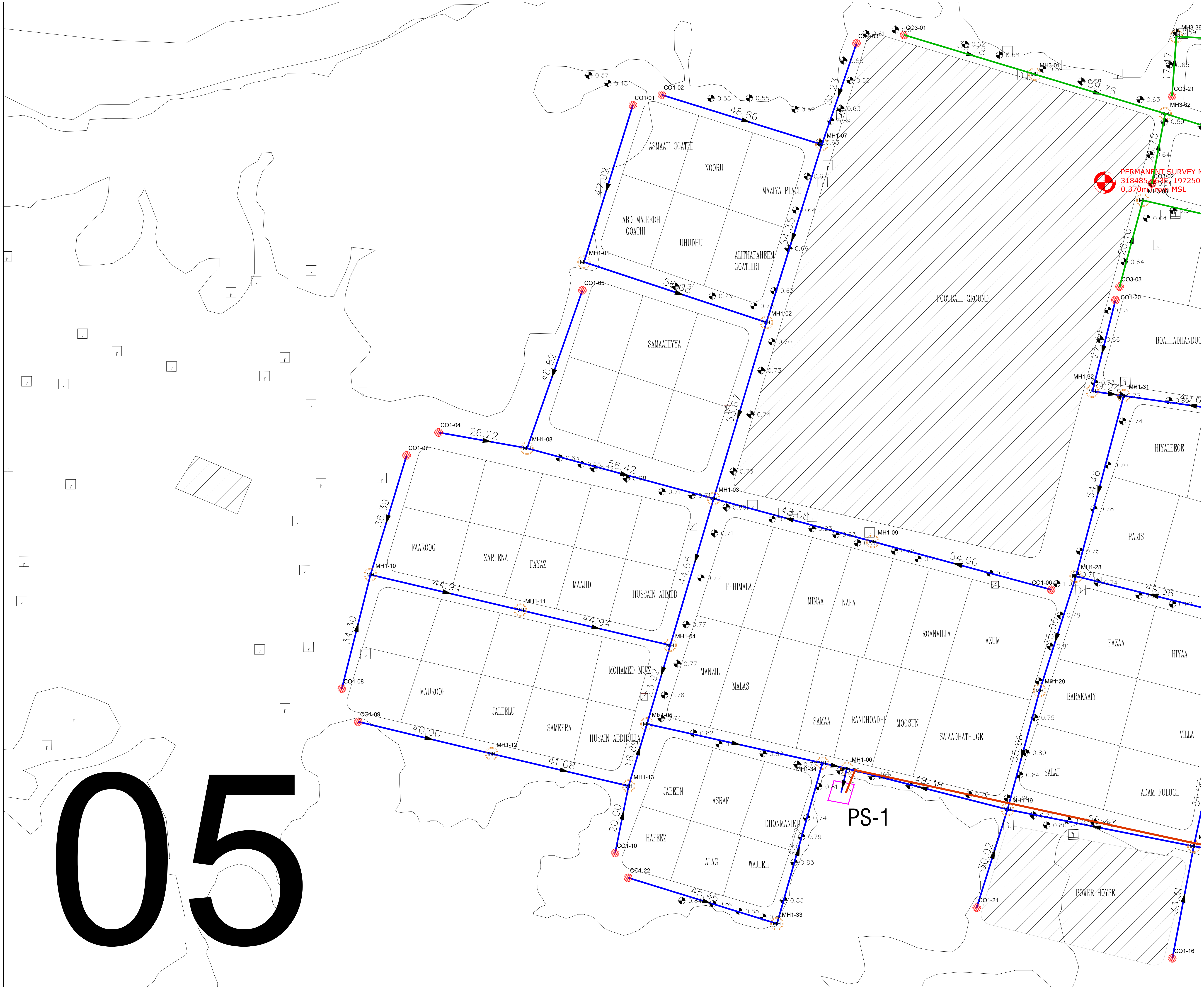
CO1-01
CO1-02
CO1-03
CO3-01
MH3-39
MH3-01
CO3-21
MH3-02
MH1-07
ASMAAU GOATHI
NOORU
MAZIYA PLACE
ABD MAJEEDH GOATHI
UHUDHU
ALITHAFAHEEM GOATHIRI
FOOTBALL GROUND
PERMANENT SURVEY M
318485.63E, 197250
0.370m From MSL
CO3-02
MH3-09
CO3-03
CO1-20
BOALHADHANDUG
MH1-01
CO1-05
MH1-02
SAMAAHIYYA
MH1-32
MH1-31
CO1-04
MH1-08
CO1-07
MH1-03
HIYALEEGE
PARIS
MH1-09
MH1-28
CO1-06
MH1-10
FAAROOG
ZAREENA
FAYAZ
MAAJID
HUSSAIN AHMED
FEHIMALA
MINAA
NAFA
ROANVILLA
AZUM
FAZAA
HIYAA
MH1-11
MH1-04
MOHAMED MUIZ
MANZIL
MALAS
BARAKAAIY
MH1-29
CO1-08
MAUROOF
JALEELU
SAMEERA
HUSAIN ABDHULLA
SAMAA
RANDHOADHI
MOOSUN
SA'AADHATHUGE
VILLA
CO1-09
MH1-12
MH1-05
MH1-13
JABEEN
ASRAF
MH1-06
MH1-34
SALAF
ADAM FULUGE
PS-1
MH1-19
HAFEEZ
DHONMANIKU
CO1-10
ALAG
WAJEEH
CO1-22
MH1-33
POWER HOUSE
CO1-21
CO1-16

05

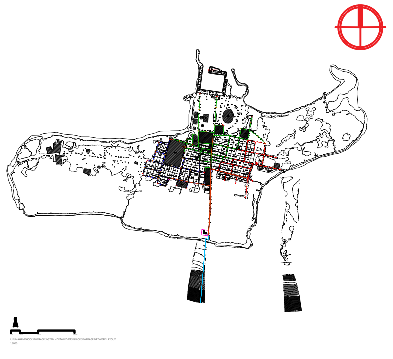
N
L. KUNAHANDHOO SEWERAGE SYSTEM - DETAILED DESIGN OF SEWERAGE NETWORK LAYOUT
1:6000

## Legend

| | |
|---|---|
| 🟦 | 160mm Ø uPVC PS1 Gravity Sewer Main (SN4, SDR41) |
| 🟥 | 160mm Ø uPVC PS2 Gravity Sewer Main (SN4, SDR41) |
| 🟩 | 160mm Ø uPVC PS3 Gravity Sewer Main (SN4, SDR41) |
| MH | 600mm Ø PE/PP Maintenance Shaft |
| ● | 160mmø uPVC Clean Out |
| 🟧 | 160 mm Ø HDPE Pumping Main (PE100, PN16, SDR11) |
| 🟦 | 160 mm Ø HDPE Sea Outfall Pipe (PE100, PN16, SDR11) |

| REV. NO. | Date | Revision Description | Drawn | Chkd | Appd. |
|---|---|---|---|---|---|
| | | | | | |

Title:

**Consultancy Services for Survey, Design and EIA works of Water Supply and Sewerage Facilities in 7 islands, Maldives - Package 6**

Sub Title:

**Sewerage System in GA. Nilandhoo**

Client:

**Ministry of National Planning, Housing and Infrastructure, Republic of Maldives**

EPOCH ASSOCIATES
**T**: +960 333 3528
**E**: info@epoch.associates
**W**: wwww.epoch.associates
**A**: G. Rosary West,
Husnuheenaa Magu, Male', Maldives

FEEDBACK INFRA
Making Infrastructure Happen

| | | | |
|---|---|---|---|
| Drawn: | F.I.A. | Checked: | M.S.S. |
| Designed: | F.I.A. | Approved: | I.W. |
| Date: | Sep 2020 | SCALE (A3): | 1:1000 |

Project No: EP-WS/2019/06

Rev:

Page: (5)

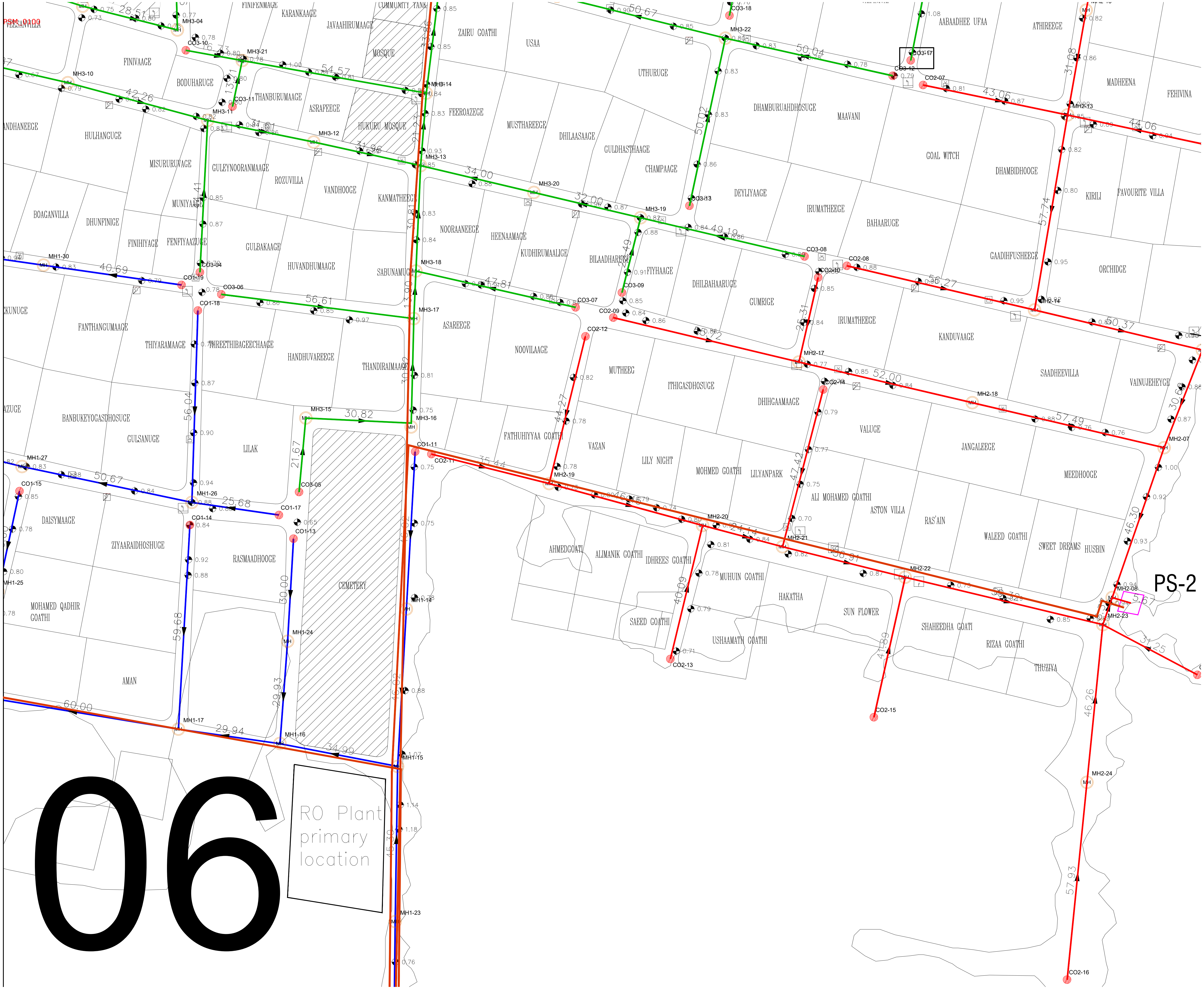
PSM- 0.100
FINIFENMAGE
KARANKAAGE
JAVAAHIRUMAAGE
COMMUNITY TANK
ZAIRU GOATHI
USAA
UTHURUGE
AABAADHEE UFAA
ATHIREEGE
MADHEENA
FEHIVINA
FINIVAAGE
BODUHARUGE
MOSQUE
HUKURU MOSQUE
THANBURUMAAGE
ASRAFEEGE
FEEROAZEGE
MUSTHAREEGE
DHILAASAAGE
GULDHASTHAAGE
CHAMPAAGE
DHAMBURUAHDHOSUGE
MAAVANI
GOAL WITCH
DHAMBIDHOOGE
KIRILI
FAVOURITE VILLA
ANDHANEEGE
HULHANGUGE
MISURURUVAAGE
GULEYNOORANMAAGE
ROZUVILLA
VANDHOOGE
KANMATHEEGE
NOORAANEEGE
HEENAAMAAGE
KUDHIRUMAALIGE
BILAADHAREEGE
FIYHAAGE
DEYLIYAAGE
IRUMATHEEGE
BAHAARUGE
GAADHIFUSHEEGE
ORCHIDGE
BOAGANVILLA
DHUNFINIGE
MUNIYAAGE
FINIHIYAGE
FENFIYAAZUGE
GULBAKAAGE
HUVANDHUMAAGE
SABUNAMUGE
DHILBAHAARUGE
GUMRIGE
IRUMATHEEGE
KANDUVAAGE
KUNUGE
FANTHANGUMAAGE
THIYARAMAAGE
THREETHIBAGEECHAAGE
ASAREEGE
NOOVILAAGE
MUTHEEG
ITHIGASDHOSUGE
DHIHGAAMAAGE
SAADHEEVILLA
VAINUJEHEYGE
HANDHUVAREEGE
THANDIRAIMAAGE
AZUGE
BANBUKEYOGASDHOSUGE
GULSANUGE
LILAK
FATHUHIYYAA GOATHI
VAZAN
LILY NIGHT
MOHMED GOATHI
LILYANPARK
VALUGE
JANGALEEGE
MEEDHOOGE
ALI MOHAMED GOATHI
ASTON VILLA
RAS'AIN
WALEED GOATHI
SWEET DREAMS
HUSBIN
DAISYMAAGE
ZIYAARAIDHOSHUGE
RASMAADHOOGE
AHMEDGOATI
ALIMANIK GOATHI
IDHREES GOATHI
MUHUIN GOATHI
HAKATHA
SUN FLOWER
MOHAMED QADHIR GOATHI
CEMETERY
SAEED GOATHI
USHAAMATH GOATHI
SHAHEEDHA GOATI
RIZAA GOATHI
THUZIYA
AMAN
PS-2
RO Plant primary location
06
MH3-04
CO3-10
MH3-21
MH3-10
MH3-11
CO3-11
MH3-12
MH3-14
MH3-13
MH3-20
MH3-19
MH3-18
MH3-17
MH3-15
MH3-16
MH3-22
CO3-18
CO3-17
CO3-12
CO3-13
CO3-08
CO3-09
CO3-07
CO3-06
CO3-04
CO3-05
CO2-07
CO2-08
CO2-10
CO2-09
CO2-12
CO2-14
CO2-11
CO2-13
CO2-15
CO2-16
MH2-13
MH2-14
MH2-17
MH2-18
MH2-07
MH2-19
MH2-20
MH2-21
MH2-22
MH2-08
MH2-23
MH2-24
MH1-30
MH1-27
MH1-26
MH1-25
MH1-24
MH1-17
MH1-16
MH1-15
MH1-14
MH1-23
CO1-19
CO1-18
CO1-15
CO1-14
CO1-17
CO1-13
CO1-11

N
L. KUNAHANDHOO SEWERAGE SYSTEM - DETAILED DESIGN OF SEWERAGE NETWORK LAYOUT
1:6000

**Legend**

| | |
|---|---|
| 🟦 | 160mm Ø uPVC PS1 Gravity Sewer Main (SN4, SDR41) |
| 🟥 | 160mm Ø uPVC PS2 Gravity Sewer Main (SN4, SDR41) |
| 🟩 | 160mm Ø uPVC PS3 Gravity Sewer Main (SN4, SDR41) |
| MH | 600mm Ø PE/PP Maintenance Shaft |
| ● | 160mmø uPVC Clean Out |
| 🟧 | 160 mm Ø HDPE Pumping Main (PE100, PN16, SDR11) |
| 🟦 | 160 mm Ø HDPE Sea Outfall Pipe (PE100, PN16, SDR11) |

| REV. NO. | Date | Revision Description | Drawn | Chkd | Appd. |
|---|---|---|---|---|---|
| | | | | | |
| | | | | | |
| | | | | | |

Title:
**Consultancy Services for Survey, Design and EIA works of Water Supply and Sewerage Facilities in 7 islands, Maldives - Package 6**

Sub Title:
**Sewerage System in GA. Nilandhoo**

Client:
**Ministry of National Planning, Housing and Infrastructure, Republic of Maldives**

EPOCH ASSOCIATES

**T**: +960 333 3528
**E**: info@epoch.associates
**W**: wwww.epoch.associates
**A**: G. Rosary West,
Husnuheenaa Magu, Male', Maldives

FEEDBACK INFRA
Making Infrastructure Happen

Drawn: F.I.A.
Checked: M.S.S.
Designed: F.I.A.
Approved: I.W.
Date: Sep 2020
SCALE (A3): 1:1000
Project No: EP-WS/2019/06
Rev:
Page: (6)

# 07

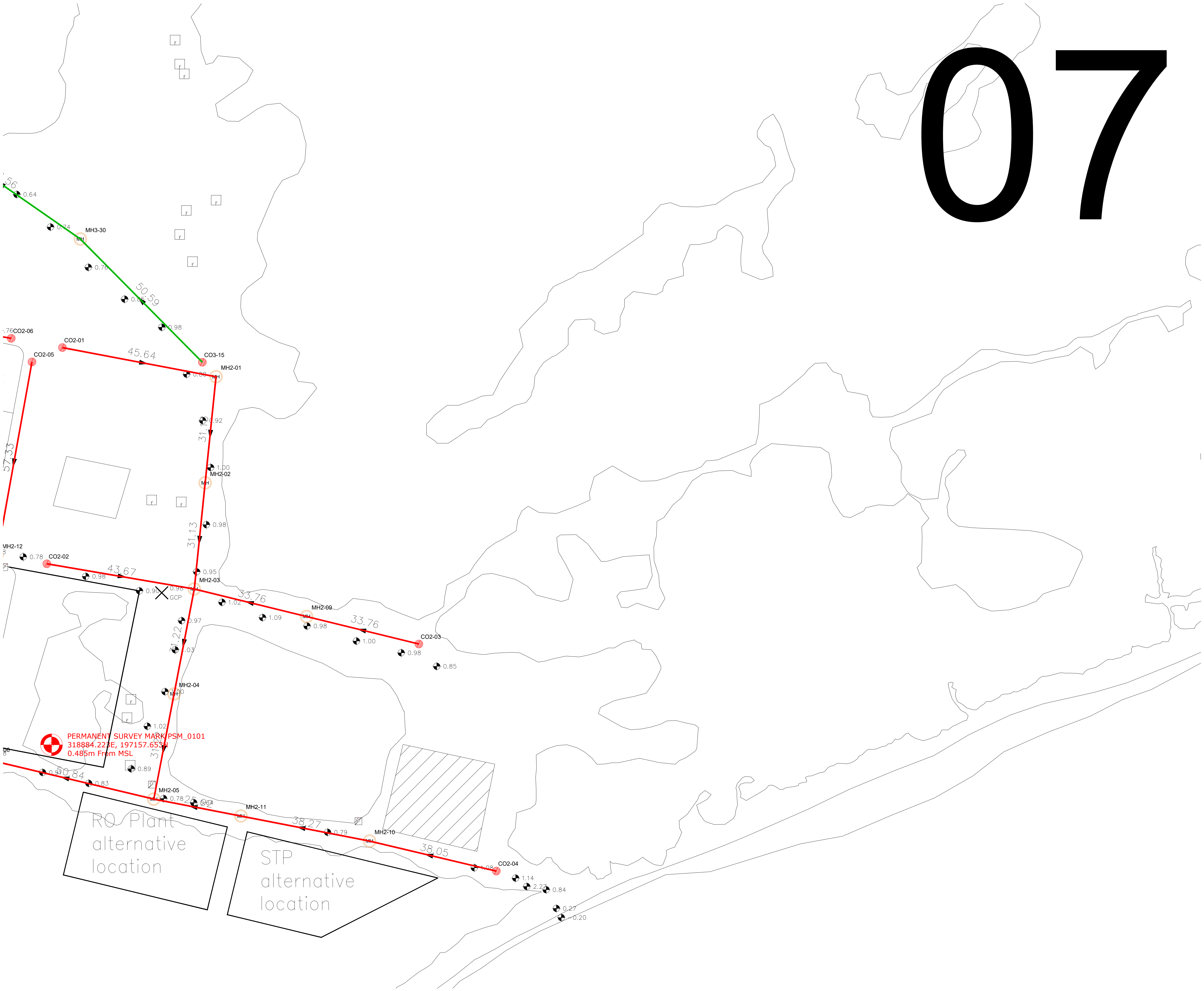
56
0.64
0.74
MH3-30
MH
0.76
50.59
0.85
0.98
.76
CO2-06
CO2-01
CO2-05
45.64
CO3-15
MH2-01
0.88
0.92
31.13
57.33
1.00
MH2-02
0.98
31.13
MH2-12
0.78
CO2-02
43.67
0.98
0.95
MH2-03
0.90
0.98
GCP
1.02
33.76
1.09
MH2-09
0.98
33.76
CO2-03
1.00
0.98
0.85
0.97
31.22
1.03
MH2-04
1.00
1.02
PERMANENT SURVEY MARK PSM_0101
318884.223E, 197157.653N
0.485m From MSL
31.22
0.89
0.91
50.84
0.83
MH2-05
0.78
25.92
0.64
MH2-11
38.27
0.79
MH2-10
38.05
1.08
CO2-04
1.14
2.27
0.84
0.27
-0.20
RO Plant alternative location
STP alternative location

N
L. KUNAHANDHOO SEWERAGE SYSTEM - DETAILED DESIGN OF SEWERAGE NETWORK LAYOUT
1:6000

**Legend**

| | |
|---|---|
| — | 160mm Ø uPVC PS1 Gravity Sewer Main (SN4, SDR41) |
| — | 160mm Ø uPVC PS2 Gravity Sewer Main (SN4, SDR41) |
| — | 160mm Ø uPVC PS3 Gravity Sewer Main (SN4, SDR41) |
| MH | 600mm Ø PE/PP Maintenance Shaft |
| ● | 160mmø uPVC Clean Out |
| — | 160 mm Ø HDPE Pumping Main (PE100, PN16, SDR11) |
| — | 160 mm Ø HDPE Sea Outfall Pipe (PE100, PN16, SDR11) |

| REV. NO. | Date | Revision Description | Drawn | Chkd | Appd. |
|---|---|---|---|---|---|
| | | | | | |
| | | | | | |
| | | | | | |
| | | | | | |
| | | | | | |
| | | | | | |

Title:

## Consultancy Services for Survey, Design and EIA works of Water Supply and Sewerage Facilities in 7 islands, Maldives - Package 6

Sub Title:

**Sewerage System in GA. Nilandhoo**

Client:

**Ministry of National Planning, Housing and Infrastructure, Republic of Maldives**

EPOCH ASSOCIATES

**T**: +960 333 3528
**E**: info@epoch.associates
**W**: wwww.epoch.associates
**A**: G. Rosary West,
Husnuheenaa Magu, Male', Maldives

FEEDBACK INFRA
Making Infrastructure Happen

| | | | |
|---|---|---|---|
| Drawn: | F.I.A. | Checked: | M.S.S. |
| Designed: | F.I.A. | Approved: | I.W. |
| Date: | Sep 2020 | SCALE (A3): | 1:1000 |

Project No: EP-WS/2019/06

Rev:

Page: (7)

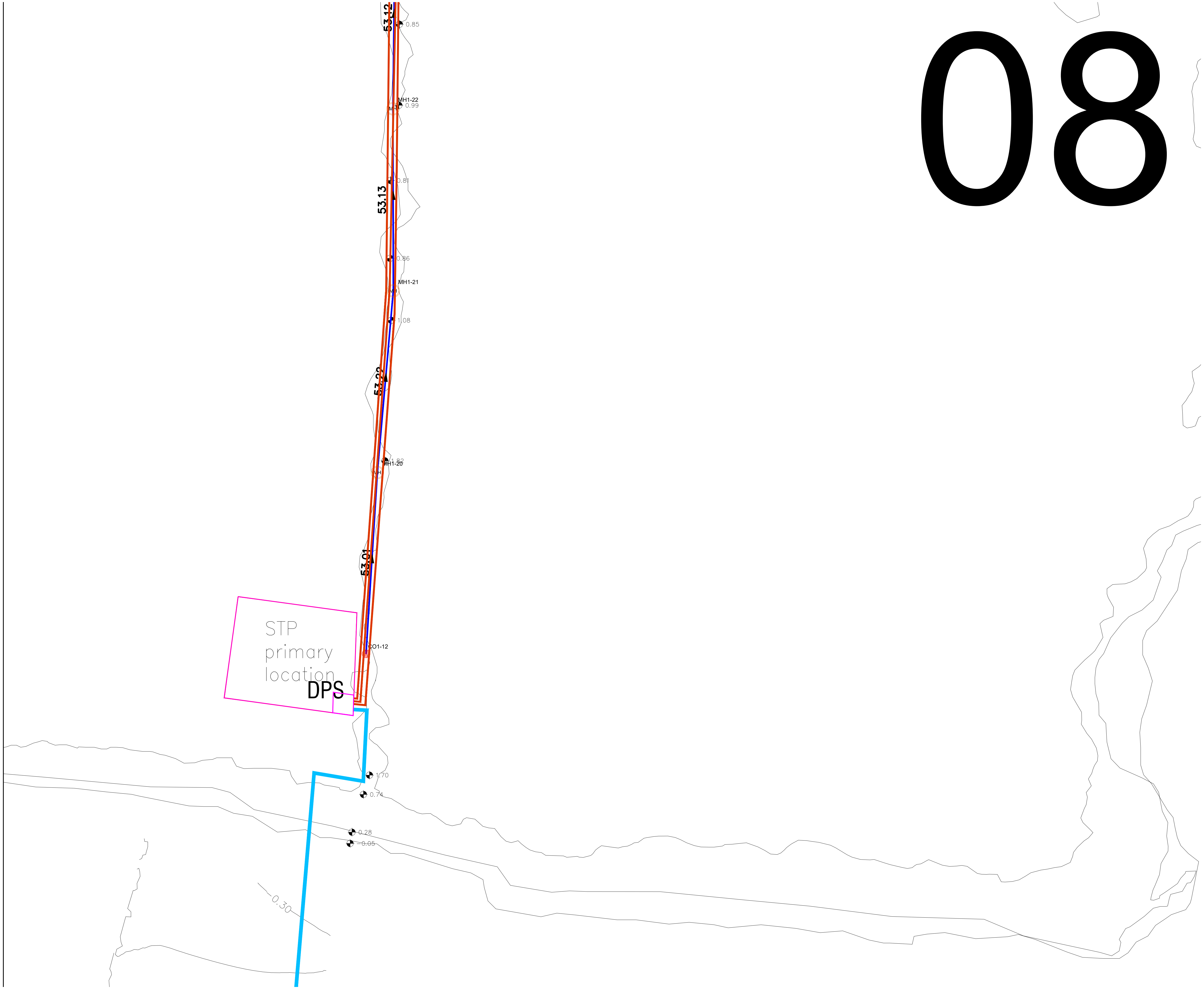
53.12
0.85
MH1-22
0.99
0.81
53.13
0.86
MH1-21
1.08
53.22
1.82
MH1-20
53.01
STP
primary
location
DPS
CO1-12
1.70
0.74
0.28
-0.05
0.30

# 08

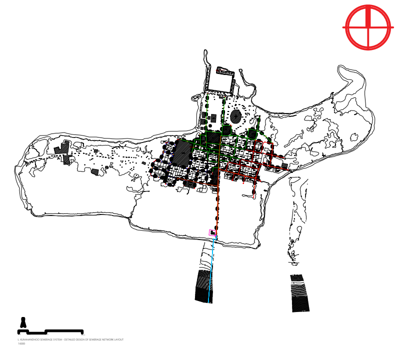
N
L. KUNAHANDHOO SEWERAGE SYSTEM - DETAILED DESIGN OF SEWERAGE NETWORK LAYOUT
1:6000

**Legend**

| | |
|---|---|
| ― | 160mm Ø uPVC PS1 Gravity Sewer Main (SN4, SDR41) |
| ― | 160mm Ø uPVC PS2 Gravity Sewer Main (SN4, SDR41) |
| ― | 160mm Ø uPVC PS3 Gravity Sewer Main (SN4, SDR41) |
| MH | 600mm Ø PE/PP Maintenance Shaft |
| ● | 160mmø uPVC Clean Out |
| ━ | 160 mm Ø HDPE Pumping Main (PE100, PN16, SDR11) |
| ━ | 160 mm Ø HDPE Sea Outfall Pipe (PE100, PN16, SDR11) |

| REV. NO. | Date | Revision Description | Drawn | Chkd | Appd. |
|---|---|---|---|---|---|
| | | | | | |

Title:
**Consultancy Services for Survey, Design and EIA works of Water Supply and Sewerage Facilities in 7 islands, Maldives - Package 6**

Sub Title:
**Sewerage System in GA. Nilandhoo**

Client:
**Ministry of National Planning, Housing and Infrastructure, Republic of Maldives**

EPOCH ASSOCIATES
**T**: +960 333 3528
**E**: info@epoch.associates
**W**: wwww.epoch.associates
**A**: G. Rosary West,
Husnuheenaa Magu, Male', Maldives

FEEDBACK INFRA
Making Infrastructure Happen

| | | | |
|---|---|---|---|
| Drawn: | F.I.A. | Checked: | M.S.S. |
| Designed: | F.I.A. | Approved: | I.W. |
| Date: | Sep 2020 | SCALE (A3): | 1:1000 |

Project No: EP-WS/2019/06

Rev:

Page: (8)

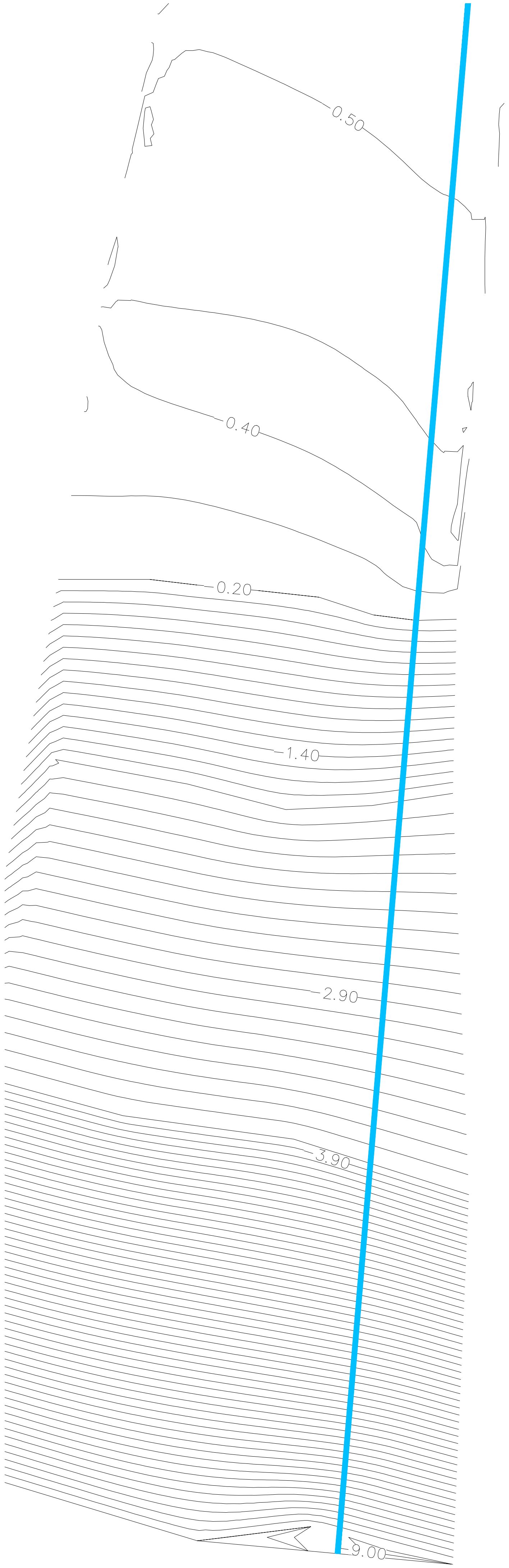

# 09

## Legend

| | |
|---|---|
| ▬ | 160mm Ø uPVC PS1 Gravity Sewer Main (SN4, SDR41) |
| ▬ | 160mm Ø uPVC PS2 Gravity Sewer Main (SN4, SDR41) |
| ▬ | 160mm Ø uPVC PS3 Gravity Sewer Main (SN4, SDR41) |
| MH | 600mm Ø PE/PP Maintenance Shaft |
| ● | 160mmø uPVC Clean Out |
| ▬ | 160 mm Ø HDPE Pumping Main (PE100, PN16, SDR11) |
| ▬ | 160 mm Ø HDPE Sea Outfall Pipe (PE100, PN16, SDR11) |

| REV. NO. | Date | Revision Description | Drawn | Chkd | Appd. |
|---|---|---|---|---|---|

Title:

Consultancy Services for Survey, Design and EIA works of Water Supply and Sewerage Facilities in 7 islands, Maldives - Package 6

Sub Title:

Sewerage System in GA. Nilandhoo

Client:

Ministry of National Planning, Housing and Infrastructure, Republic of Maldives

EPOCH ASSOCIATES

**T**: +960 333 3528
**E**: info@epoch.associates
**W**: wwww.epoch.associates
**A**: G. Rosary West,
Husnuheenaa Magu, Male', Maldives

FEEDBACK INFRA
Making Infrastructure Happen

| | | | |
|---|---|---|---|
| Drawn: | F.I.A. | Checked: | M.S.S. |
| Designed: | F.I.A. | Approved: | I.W. |
| Date: | Sep 2020 | SCALE (A3): | 1:1000 |
| Project No: | EP-WS/2019/06 | | |
| Rev: | | Page: | (9) |

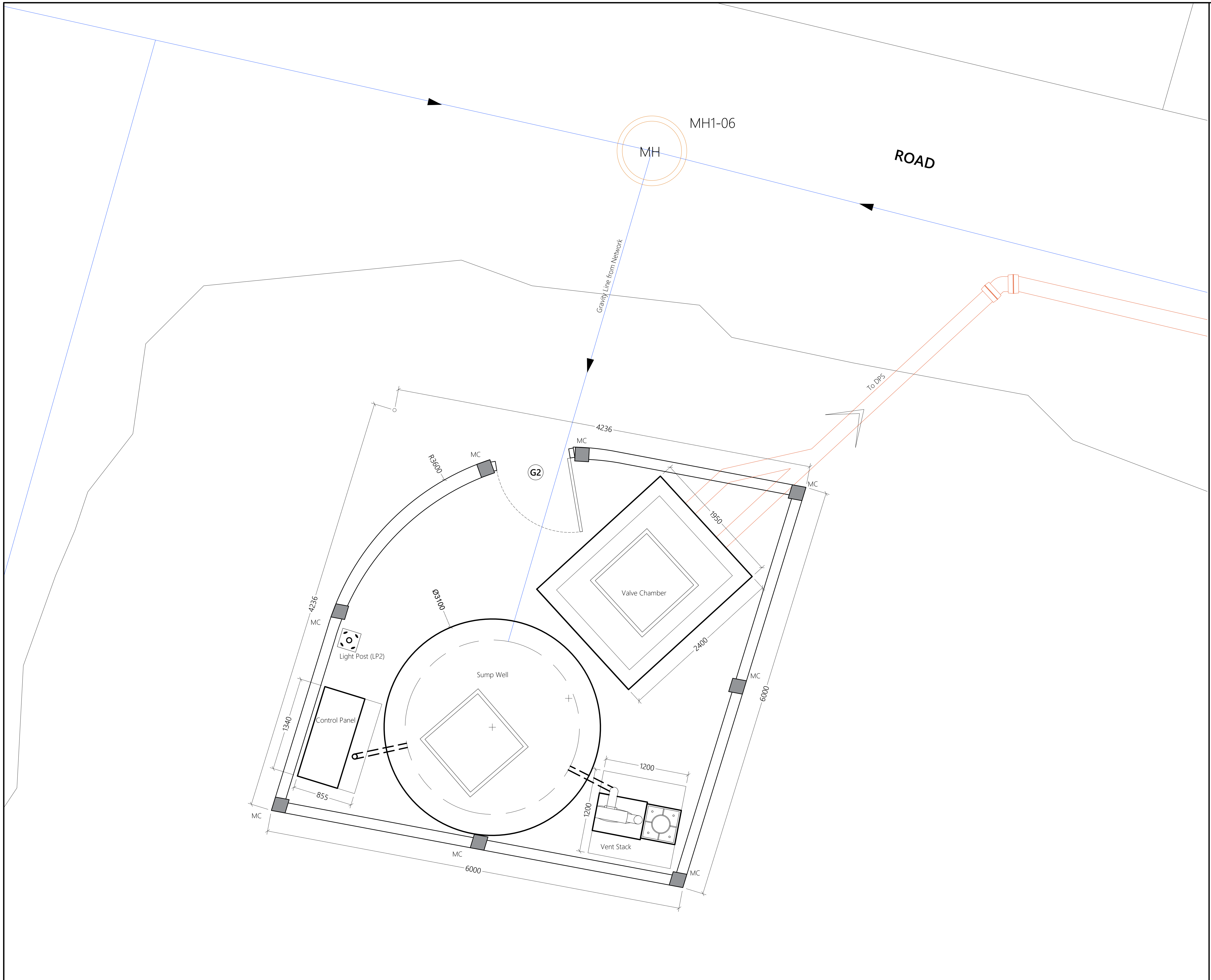
MH1-06
MH
ROAD
Gravity Line from Network
To DPS
4236
MC
R3600
MC
G2
MC
1950
Valve Chamber
2400
Ø3100
4236
MC
Light Post (LP2)
Sump Well
Control Panel
1340
855
MC
1200
1200
Vent Stack
MC
6000
MC
6000
MC

## PUMP STATION (PS1) LAYOUT

1:50

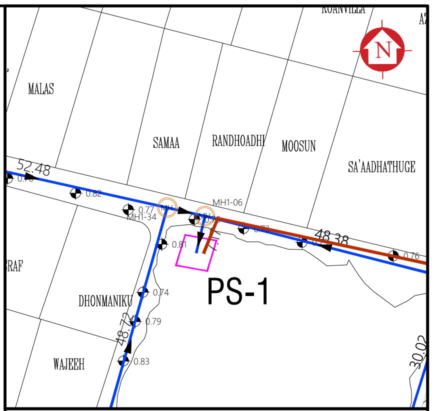
MALAS
SAMAA
RANDHOADHI
MOOSUN
SA'AADHATHUGE
RAF
DHONMANIKU
WAJEEH
52.48
0.82
0.77
MH1-34
MH1-06
0.81
0.74
0.79
0.83
48.72
48.38
0.76
30.02
PS-1
N

Legend

— 160mm Ø uPVC PS1 Gravity Sewer Main (SN4, SDR41)

Note:

| | | | | | |
|---|---|---|---|---|---|
| | | | | | |
| | | | | | |
| | | | | | |
| | | | | | |
| | | | | | |
| | | | | | |
| REV. NO. | Date | Revision Description | Drawn | Chkd | Appd. |

Title:

**Consultancy Services for Survey, Design and EIA works of Water Supply and Sewerage Facilities in 7 islands, Maldives - Pakage 6**

Sub Title:

**Water Supply System in L. Kunahandhoo**

Client:

**Ministry of National Planning, Housing and Infrastructure, Republic of Maldives**

EPOCH ASSOCIATES
**T**: +960 333 3528
**E**: info@epoch.associates
**W**: wwww.epoch.associates
**A**: G. Rosary West,
Husnuheenaa Magu, Male', Maldives

FEEDBACK INFRA
Making Infrastructure Happen

| | | | |
|---|---|---|---|
| Drawn: | F.I.A. | Checked: | M.S.S. |
| Designed: | F.I.A. | Approved: | I.W. |
| Date: | Aug 2020 | SCALE (A3): | 1:50 |
| Project No: | 01010101 | | |
| Rev: | | Page: | W-(1) |

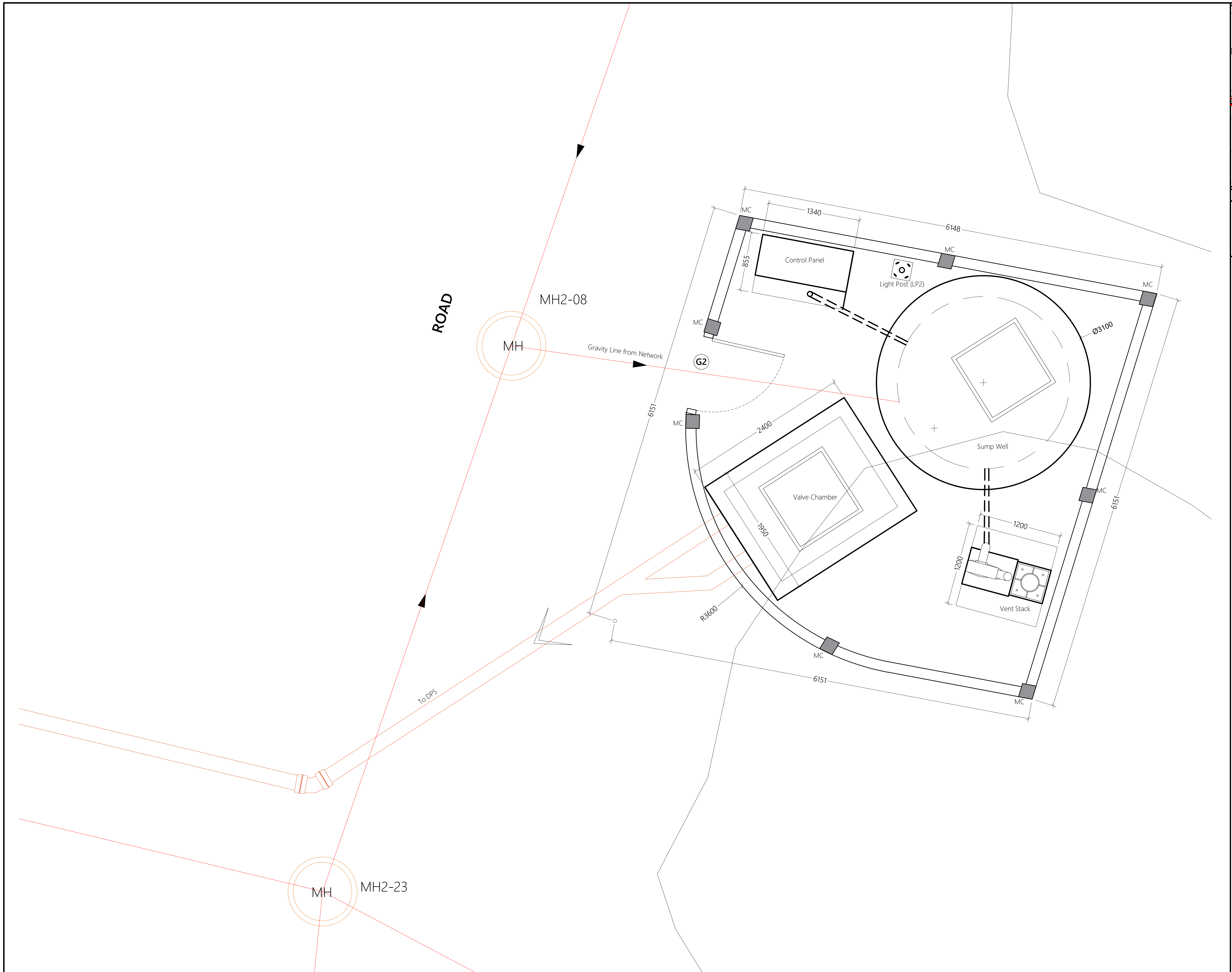
ROAD
MH2-08
MH
Gravity Line from Network
G2
MC
1340
6148
855
Control Panel
Light Post (LP2)
Ø3100
6151
2400
Sump Well
Valve Chamber
1950
1200
Vent Stack
R3600
To DPS
MH
MH2-23

## PUMP STATION (PS2) LAYOUT

1:50

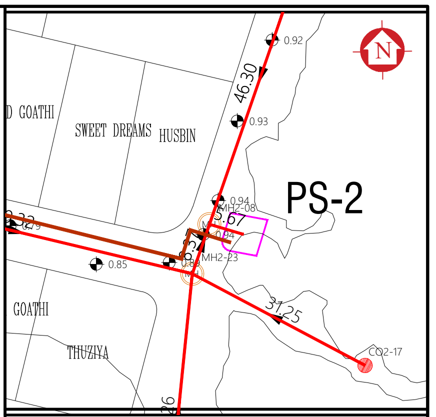
GOATHI
SWEET DREAMS
HUSBIN
46.30
0.92
0.93
0.94
0.85
PS-2
MH2-08
MH2-23
31.25
CO2-17
THUZIYA
26

Legend

| | |
|---|---|
| — | 160mm Ø uPVC PS3 Gravity Sewer Main (SN4, SDR41) |

Note:

| | | | | | |
|---|---|---|---|---|---|
| | | | | | |
| | | | | | |
| | | | | | |
| | | | | | |
| | | | | | |
| | | | | | |
| REV. NO. | Date | Revision Description | Drawn | Chkd | Appd. |

Title:
**Consultancy Services for Survey, Design and EIA works of Water Supply and Sewerage Facilities in 7 islands, Maldives - Pakage 6**

Sub Title:
**Water Supply System in L. Kunahandhoo**

Client:
**Ministry of National Planning, Housing and Infrastructure, Republic of Maldives**

EPOCH ASSOCIATES
**T**: +960 333 3528
**E**: info@epoch.associates
**W**: wwww.epoch.associates
**A**: G. Rosary West,
Husnuheenaa Magu, Male', Maldives

FEEDBACK INFRA
Making Infrastructure Happen

| | | | |
|---|---|---|---|
| Drawn: | F.I.A. | Checked: | M.S.S. |
| Designed: | F.I.A. | Approved: | I.W. |
| Date: | Aug 2020 | SCALE (A3): | 1:50 |

Project No: 01010101

Rev:

Page: W-(2)

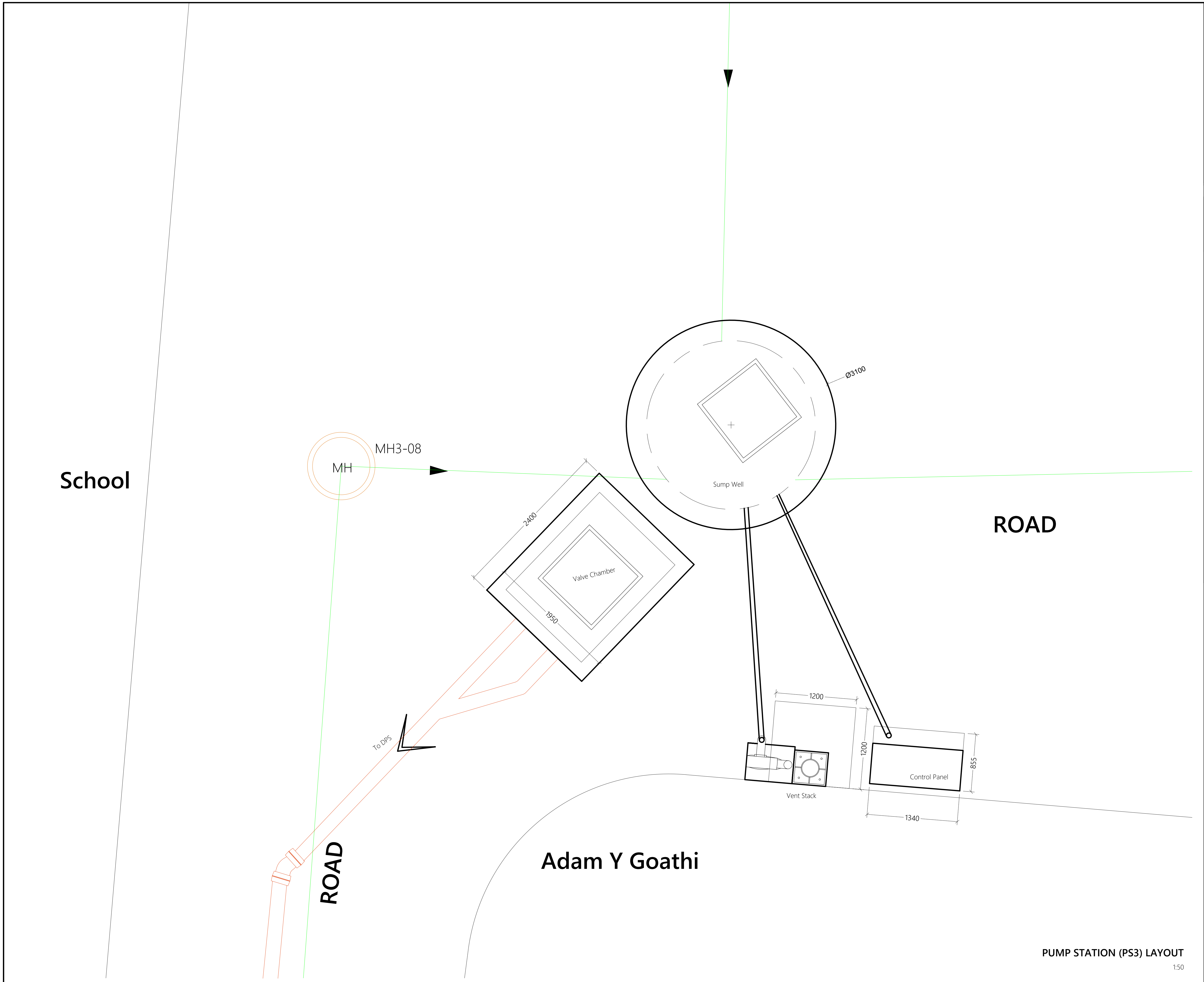
School
MH
MH3-08
2400
1950
Valve Chamber
To DPS
ROAD
Ø3100
Sump Well
ROAD
1200
1200
Vent Stack
Control Panel
855
1340
Adam Y Goathi

PUMP STATION (PS3) LAYOUT

1:50

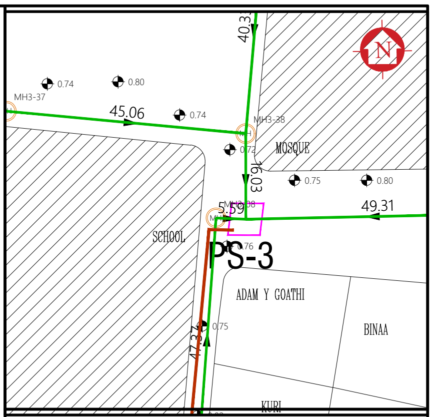
40.3
0.74
0.80
MH3-37
45.06
0.74
MH3-38
0.72
MOSQUE
16.03
0.75
0.80
5.59
MH3-08
49.31
SCHOOL
PS-3
0.76
ADAM Y GOATHI
0.75
BINAA
47.37
KURI
N

Legend

🟩 160mm Ø uPVC PS3 Gravity Sewer Main (SN4, SDR41)

Note:

-Contractor should carry out a buried utility survey for the proposed area and revise the layout and present a shop drawing for layouts

| REV. NO. | Date | Revision Description | Drawn | Chkd | Appd. |
|---|---|---|---|---|---|
| | | | | | |
| | | | | | |
| | | | | | |
| | | | | | |
| | | | | | |
| | | | | | |

Title:

**Consultancy Services for Survey, Design and EIA works of Water Supply and Sewerage Facilities in 7 islands, Maldives - Pakage 6**

Sub Title:

**Water Supply System in L. Kunahandhoo**

Client:

**Ministry of National Planning, Housing and Infrastructure, Republic of Maldives**

EPOCH ASSOCIATES
**T**: +960 333 3528
**E**: info@epoch.associates
**W**: wwww.epoch.associates
**A**: G. Rosary West,
Husnuheenaa Magu, Male', Maldives

FEEDBACK INFRA
Making Infrastructure Happen

| | | | |
|---|---|---|---|
| Drawn: | F.I.A. | Checked: | M.S.S. |
| Designed: | F.I.A. | Approved: | I.W. |
| Date: | Aug 2020 | SCALE (A3): | 1:50 |
| Project No: | 01010101 | | |
| Rev: | | Page: | W-(3) |

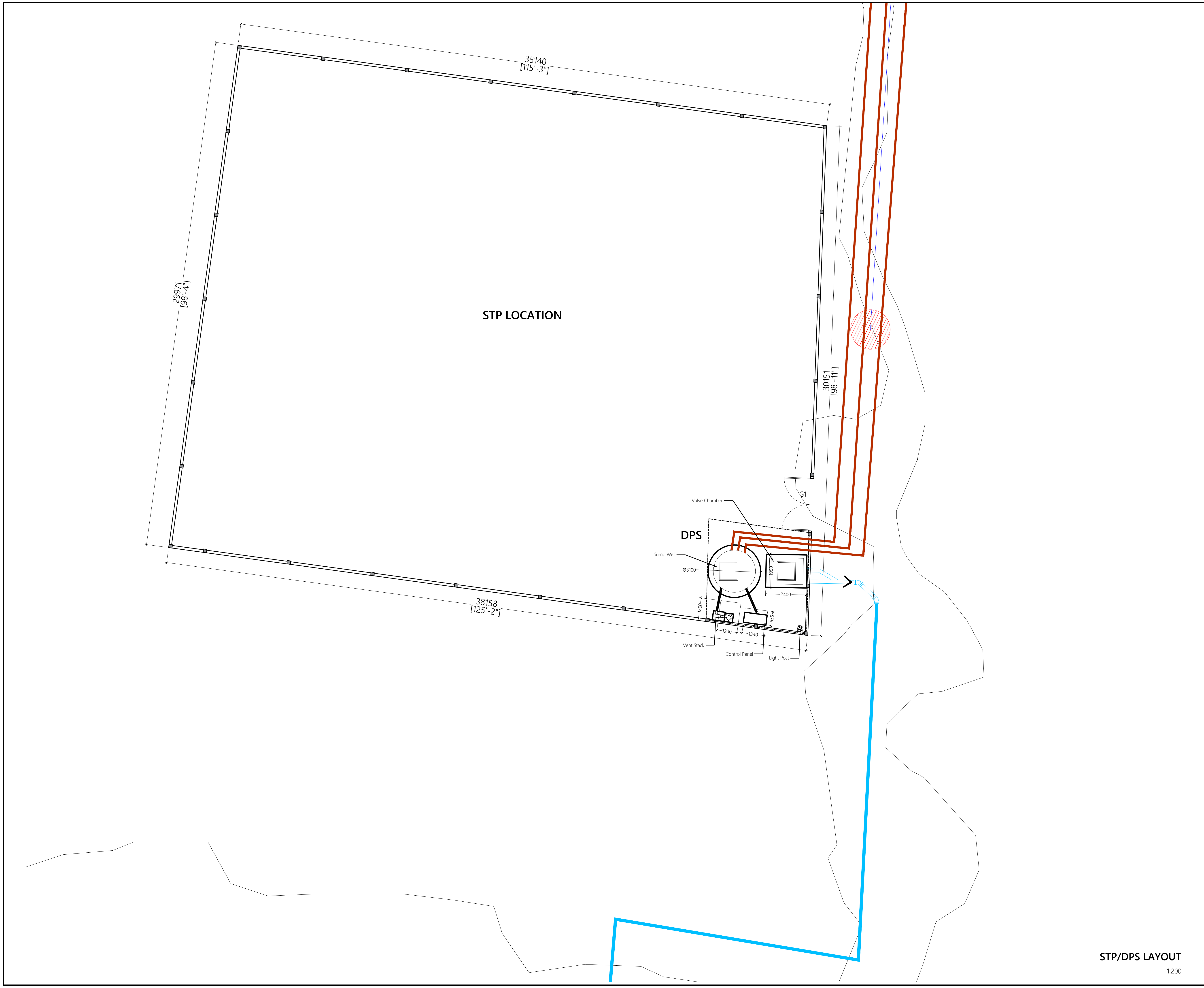
35140
[115'-3"]
29971
[98'-4"]
STP LOCATION
30151
[98'-11"]
38158
[125'-2"]
G1
Valve Chamber
DPS
Sump Well
Ø3100
1950
2400
1200
1200
1340
855
Vent Stack
Control Panel
Light Post

## STP/DPS LAYOUT

1:200

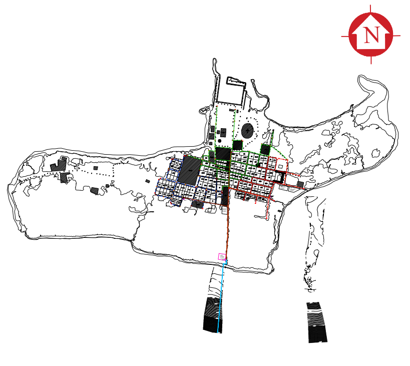

Legend

| | |
|---|---|
| ― | 160mm Ø uPVC Gravity Sewer Main (SN4, SDR41) |
| ― | 110 mm Ø HDPE Pumping Main (PE100, PN16, SDR11) |
| ― | 160 mm Ø HDPE Sea Outfall Pipe (PE100, PN16, SDR11) |

Note:

- The contract should carry out the site clearing works for future STP plot
- The boundary wall for the STP should be constructed as per the detail
- Discharge pump station structures to be constructed as per the detail layout given

| | | | | | |
|---|---|---|---|---|---|
| | | | | | |
| | | | | | |
| | | | | | |
| | | | | | |
| | | | | | |
| | | | | | |
| | | | | | |
| REV. NO. | Date | Revision Description | Drawn | Chkd | Appd. |

Title:

Consultancy Services for Survey, Design and EIA works of Water Supply and Sewerage Facilities in 7 islands, Maldives - Pakage 6

Sub Title:

Water Supply System in L. Kunahandhoo

Client:

Ministry of National Planning, Housing and Infrastructure, Republic of Maldives

EPOCH ASSOCIATES

**T**: +960 333 3528
**E**: info@epoch.associates
**W**: wwww.epoch.associates
**A**: G. Rosary West,
Husnuheenaa Magu, Male', Maldives

FEEDBACK INFRA
Making Infrastructure Happen

| | | | |
|---|---|---|---|
| Drawn: | F.I.A. | Checked: | M.S.S. |
| Designed: | F.I.A. | Approved: | I.W. |
| Date: | Aug 2020 | SCALE (A3): | 1:200 |
| Project No: | 01010101 | | |
| Rev: | | Page: | W-(4) |

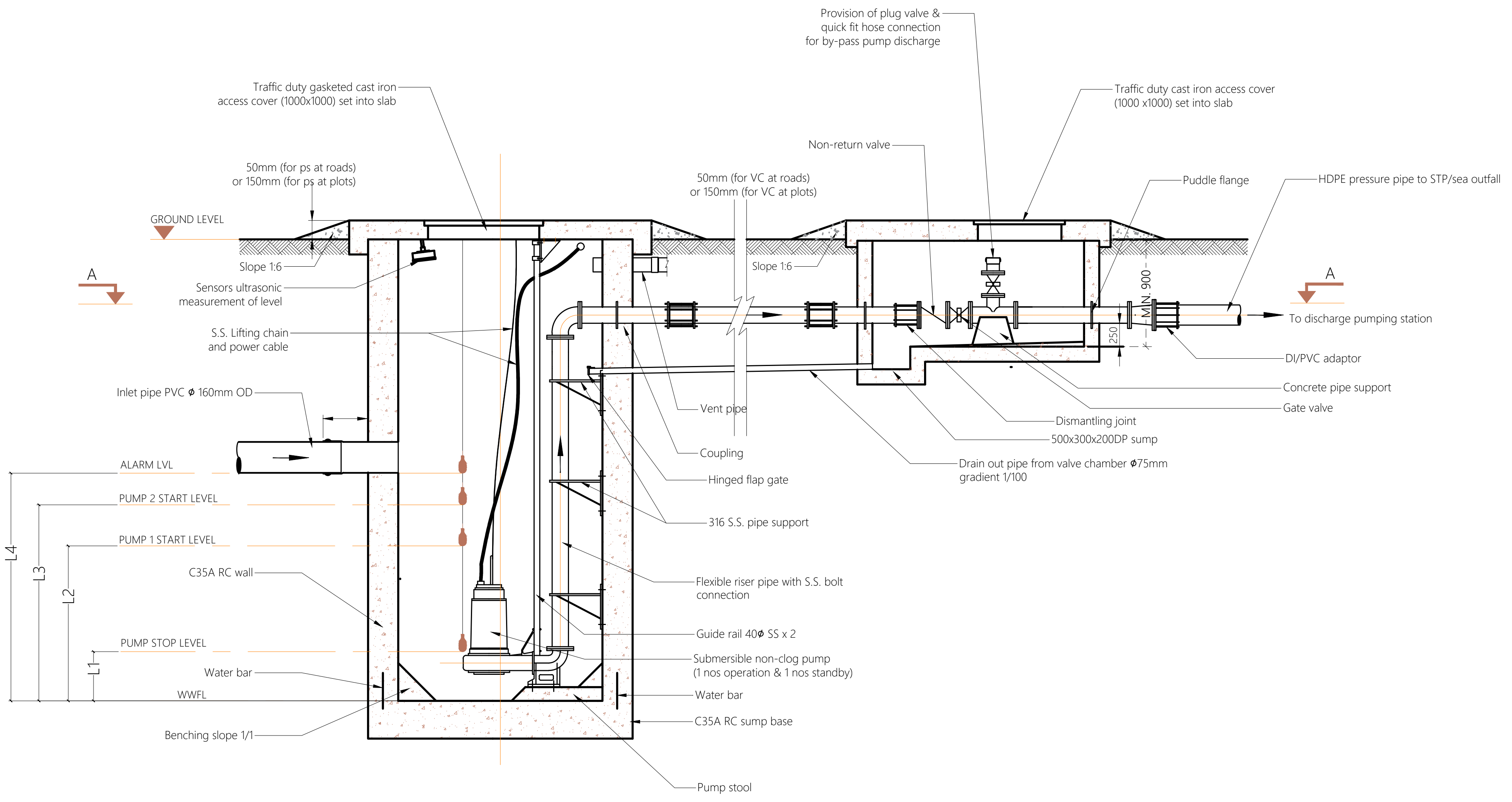
Provision of plug valve &
quick fit hose connection
for by-pass pump discharge
Traffic duty gasketed cast iron
access cover (1000x1000) set into slab
Traffic duty cast iron access cover
(1000 x1000) set into slab
Non-return valve
50mm (for ps at roads)
or 150mm (for ps at plots)
50mm (for VC at roads)
or 150mm (for VC at plots)
Puddle flange
HDPE pressure pipe to STP/sea outfall
GROUND LEVEL
Slope 1:6
Slope 1:6
A
A
MIN. 900
250
To discharge pumping station
Sensors ultrasonic
measurement of level
S.S. Lifting chain
and power cable
DI/PVC adaptor
Concrete pipe support
Gate valve
Inlet pipe PVC ɸ 160mm OD
Vent pipe
Dismantling joint
500x300x200DP sump
Coupling
Drain out pipe from valve chamber ɸ75mm
gradient 1/100
ALARM LVL
Hinged flap gate
PUMP 2 START LEVEL
PUMP 1 START LEVEL
316 S.S. pipe support
L4
L3
L2
L1
C35A RC wall
Flexible riser pipe with S.S. bolt
connection
Guide rail 40ɸ SS x 2
PUMP STOP LEVEL
Submersible non-clog pump
(1 nos operation & 1 nos standby)
Water bar
Water bar
WWFL
C35A RC sump base
Benching slope 1/1
Pump stool

PUMP STATION DESIGN DETAILS (15 YEARS)

| Pump Station | Diameter (ɸ) | Depth (D) | Inlet Depth | Pump Capacity | Head | Levels | | | |
|---|---|---|---|---|---|---|---|---|---|
| | | | | | | L1 | L2 | L3 | L4 |
| PS1 | 2.5m | 3.00m | 2.2m | 2.5 l/s | 12.2 m | 0.300m | 0.376m | 0.526m | 0.676m |
| PS2 | 2.5m | 3.00m | 2.2m | 1.4 l/s | 13.8 m | 0.300m | 0.342m | 0.492m | 0.642m |
| PS3 | 2.5m | 3.00m | 2.1m, 2.1m, 2.0m | 2.2 l/s | 12.8 m | 0.300m | 0.368m | 0.518m | 0.668m |
| DPS | 2.5m | 3.00m | 0.8m | 6.1 l/s | 21.0 m | 0.300m | 0.485m | 0.635m | 0.785m |

## PUMP STATION DETAILS - LONGITUDINAL SECTION

NTS

Legend

Note:

-Pumps, pipe work, fittings and control panel shall be installed in accordance with manufacturers recommendations.
- Orientation of valve chamber pipework to suit location.
- All structural concrete shall be of grade C35A.
- All castings shall be done using sulphate resistant portland cement to BS 4027:1996.
- All structural reinforcement shall be epoxy coating of non-pre-stressed reinforcement to ASTM-A775/A775M.
- A cover of 75mm should be given for all reinforcements.
- Internal concrete surfaces to be coated with 5mm thickness of epoxy bonded glass fibre and finished with gel coat or 500 microns epoxy paint coating.
- External concrete surfaces to be painted with 3 coats of bitumen/rubber emulsion and protected by 500 micron polyethene.

List of main instruments of pumping station:
1. Sewage pumps (1 duty & 1 standby)
2. Power cable
3. Auto-coupling with 40Ø SS guide rail
4. Stainless steel (316) suspension chain
5. Cable with float control and weight
6. Discharge pipe
7. Puddle flange
8. Bitumen emulsion and 500 micron polythene sheet protection to external concrete surfaces
9. Construction joint / water bars
10. Manhole cover double seal ductile heavy duty cast iron / SS 316 cover
11. Vent pipe with vent cowl

| REV. NO. | Date | Revision Description | Drawn | Chkd | Appd. |
|---|---|---|---|---|---|

Title:
**Consultancy Services for Survey, Design and EIA works of Water Supply and Sewerage Facilities in 7 islands, Maldives - Pakage 6**

Sub Title:
**Water Supply System in L. Kunahandhoo**

Client:
**Ministry of National Planning, Housing and Infrastructure, Republic of Maldives**

EPOCH ASSOCIATES
**T**: +960 333 3528
**E**: info@epoch.associates
**W**: wwww.epoch.associates
**A**: G. Rosary West,
Husnuheenaa Magu, Male', Maldives

FEEDBACK INFRA
Making Infrastructure Happen

Drawn: F.I.A.
Checked: M.S.S.
Designed: F.I.A.
Approved: I.W.
Date: Aug 2020
SCALE (A3): NTS
Project No: 01010101
Rev:
Page: W-(5)

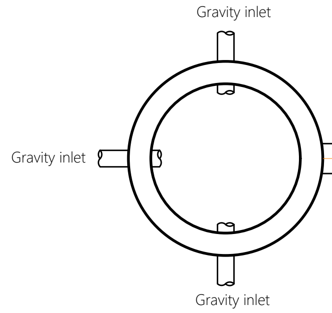
Gravity inlet
Gravity inlet
Gravity inlet

MANHOLE ϕ600mm

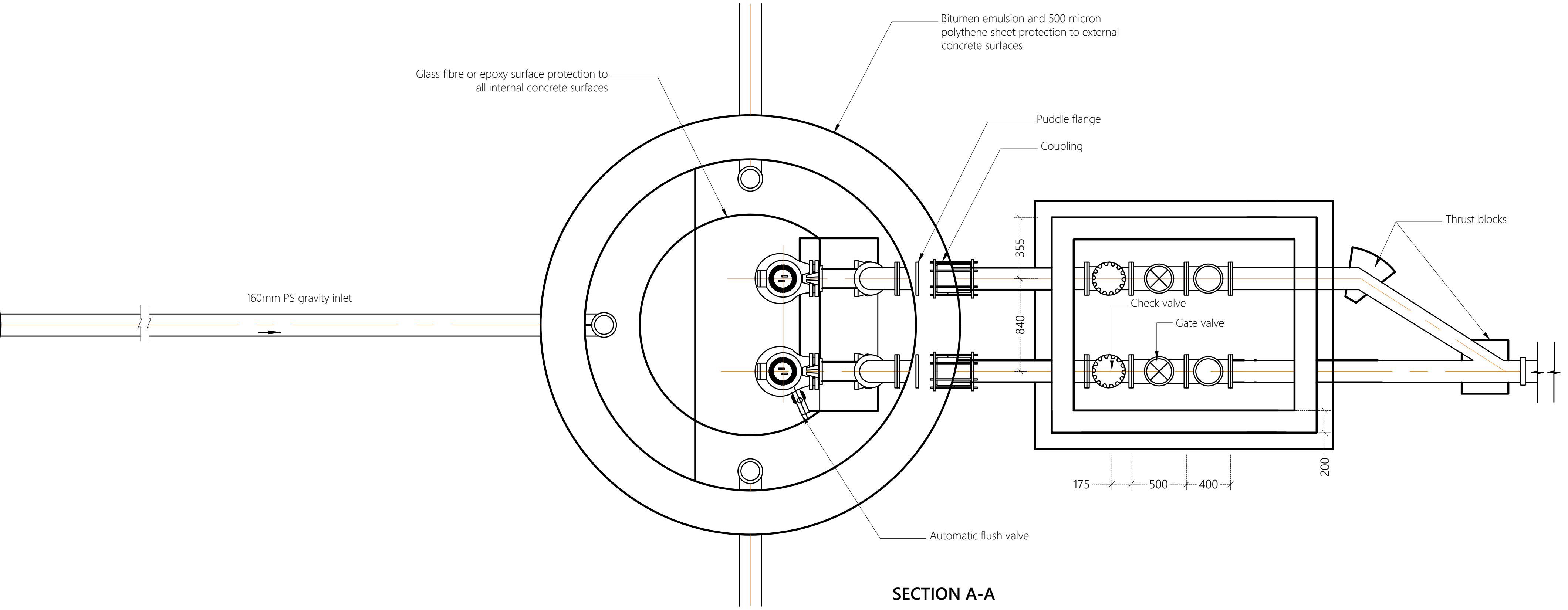
160mm PS gravity inlet
Glass fibre or epoxy surface protection to all internal concrete surfaces
Bitumen emulsion and 500 micron polythene sheet protection to external concrete surfaces
Puddle flange
Coupling
Thrust blocks
Check valve
Gate valve
Automatic flush valve
355
840
175
500
400
200

SECTION A-A

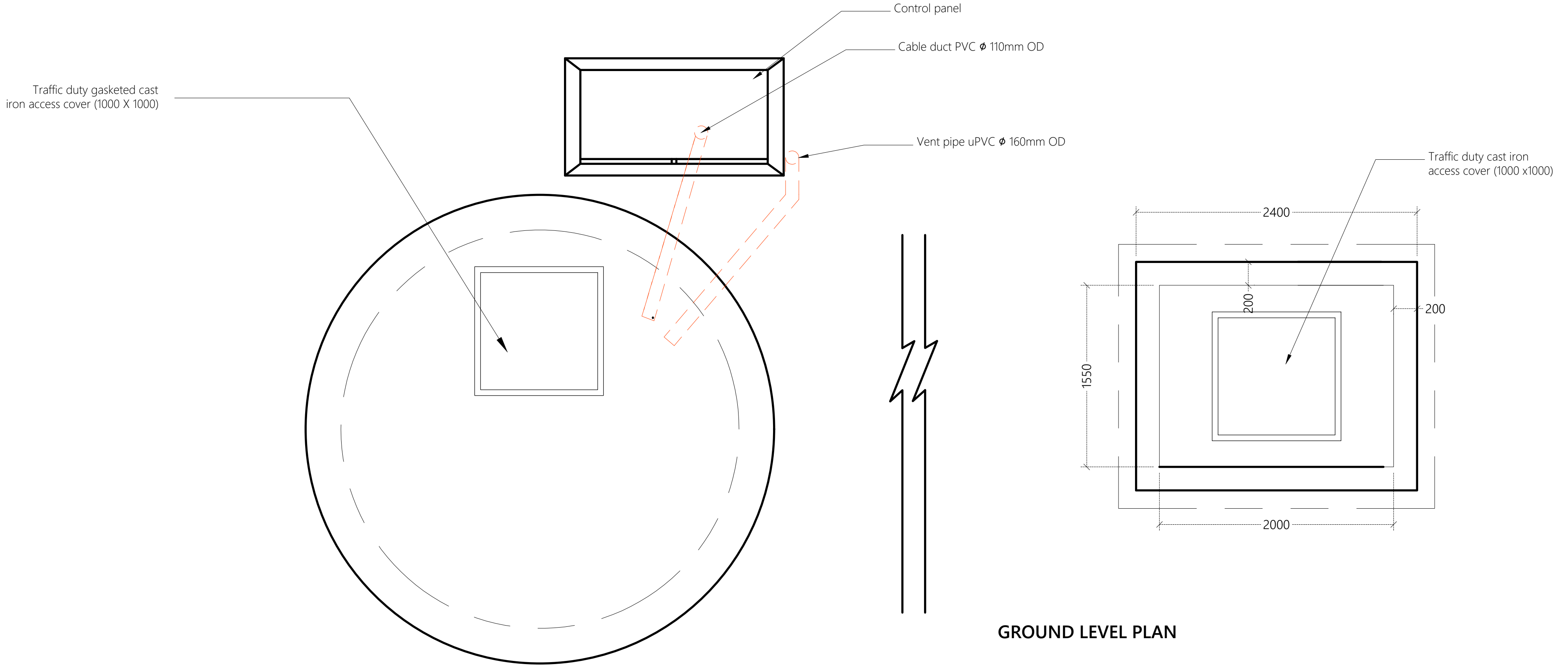
Control panel
Cable duct PVC ϕ 110mm OD
Traffic duty gasketed cast iron access cover (1000 X 1000)
Vent pipe uPVC ϕ 160mm OD
Traffic duty cast iron access cover (1000 x1000)
2400
200
200
1550
2000

GROUND LEVEL PLAN

PUMP STATION DETAILS - PLAN VIEW

NTS

Legend

Note:

-Pumps, pipe work, fittings and control panel shall be installed in accordance with manufacturers recommendations.
- Orientation of valve chamber pipework to suit location.
- All structural concrete shall be of grade C35A.
- All castings shall be done using sulphate resistant portland cement to BS 4027:1996.
- All structural reinforcement shall be epoxy coating of non-pre-stressed reinforcement to ASTM-A775/A775M.
- A cover of 75mm should be given for all reinforcements.
- Internal concrete surfaces to be coated with 5mm thickness of epoxy bonded glass fibre and finished with gel coat or 500 microns epoxy paint coating.
- External concrete surfaces to be painted with 3 coats of bitumen/rubber emulsion and protected by 500 micron polyethene.

List of main instruments of pumping station:
1. Sewage pumps (1 duty & 1 standby)
2. Power cable
3. Auto-coupling with 40Ø SS guide rail
4. Stainless steel (316) suspension chain
5. Cable with float control and weight
6. Discharge pipe
7. Puddle flange
8. Bitumen emulsion and 500 micron polythene sheet protection to external concrete surfaces
9. Construction joint / water bars
10. Manhole cover double seal ductile heavy duty cast iron / SS 316 cover
11. Vent pipe with vent cowl

| REV. NO. | Date | Revision Description | Drawn | Chkd | Appd. |
|---|---|---|---|---|---|
| | | | | | |
| | | | | | |
| | | | | | |
| | | | | | |
| | | | | | |
| | | | | | |

Title:
**Consultancy Services for Survey, Design and EIA works of Water Supply and Sewerage Facilities in 7 islands, Maldives - Pakage 6**

Sub Title:
**Water Supply System in L. Kunahandhoo**

Client:
**Ministry of National Planning, Housing and Infrastructure, Republic of Maldives**

T: +960 333 3528
E: info@epoch.associates
W: wwww.epoch.associates
A: G. Rosary West,
Husnuheenaa Magu, Male', Maldives

Drawn: F.I.A.
Checked: M.S.S.
Designed: F.I.A.
Approved: I.W.
Date: Aug 2020
SCALE (A3): NTS
Project No: 01010101
Rev:
Page: W-(6)

## PLAN VIEW

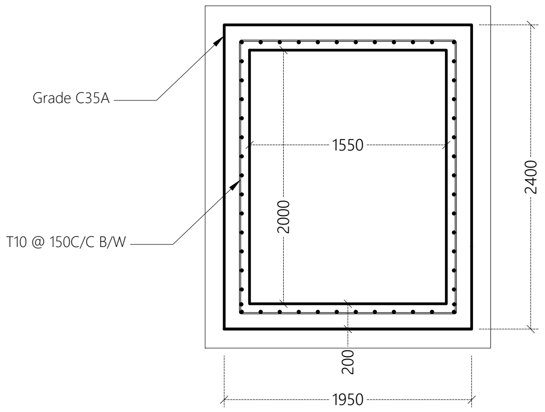
Grade C35A
T10 @ 150C/C B/W
1550
2000
2400
200
1950

## SECTION

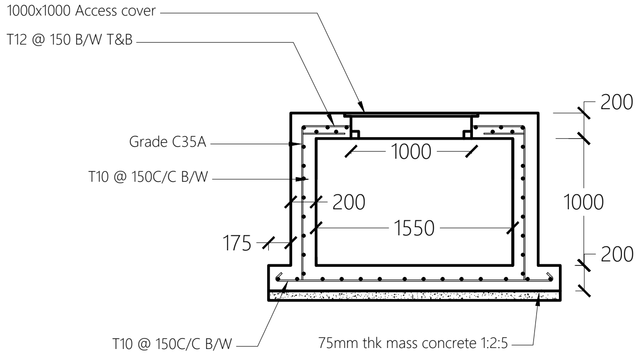
1000x1000 Access cover
T12 @ 150 B/W T&B
Grade C35A
T10 @ 150C/C B/W
1000
200
1550
175
200
1000
200
T10 @ 150C/C B/W
75mm thk mass concrete 1:2:5

## VALVE CHAMBER DETAIL

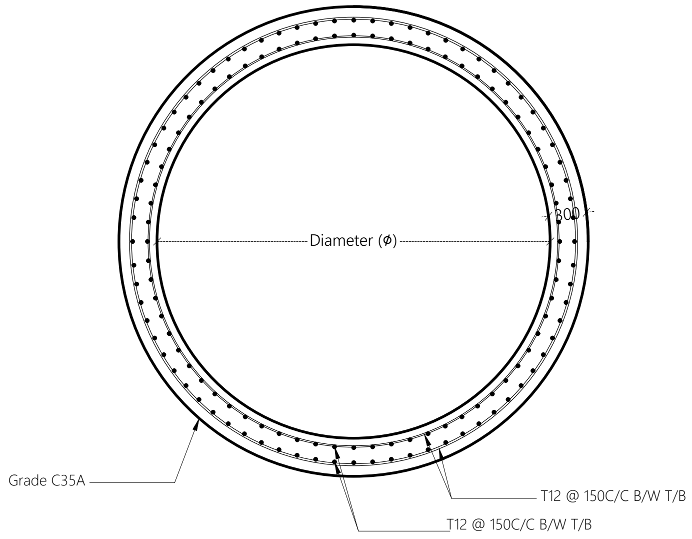
Diameter (Ø)
300
Grade C35A
T12 @ 150C/C B/W T/B
T12 @ 150C/C B/W T/B

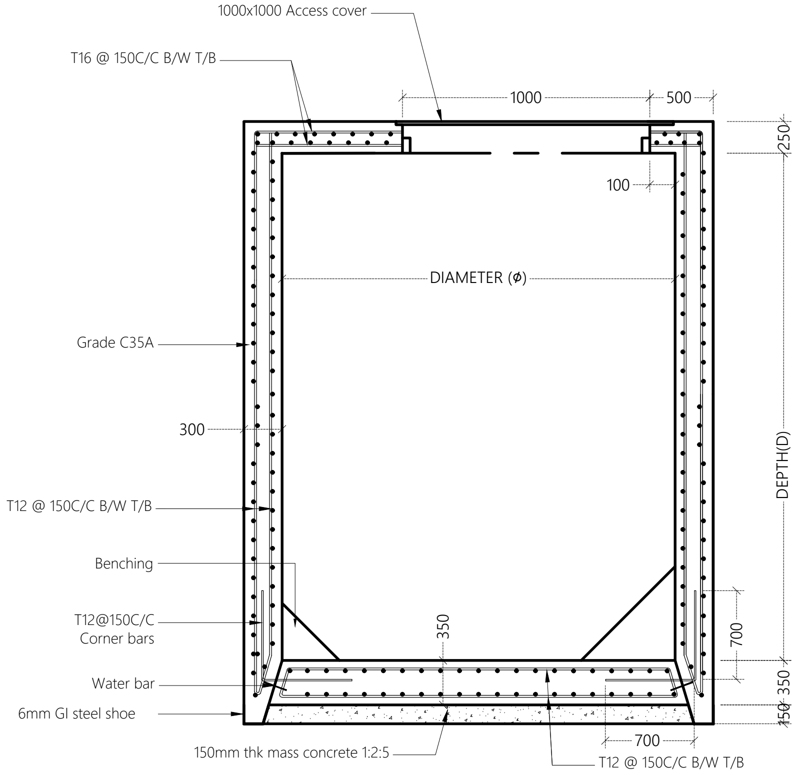
1000x1000 Access cover
T16 @ 150C/C B/W T/B
1000
500
250
100
DIAMETER (Ø)
Grade C35A
300
DEPTH(D)
T12 @ 150C/C B/W T/B
Benching
T12@150C/C
Corner bars
350
700
350
150
Water bar
6mm GI steel shoe
700
150mm thk mass concrete 1:2:5
T12 @ 150C/C B/W T/B

## PUMP STATION DETAIL

| Pump Station | Diameter (Ø) | Depth (D) | Inlet Depth |
|---|---|---|---|
| PS1 | 2.5m | 3.00m | 2.213m |
| PS2 | 2.5m | 3.00m | 2.155m |
| PS3 | 2.5m | 3.00m | 2.122m, 2.071m, 2.037m |
| DPS | 2.5m | 3.00m | 0.8m |

## PUMP STATION STRUCTURAL DETAILS

NTS

Legend

Note:

-Pumps, pipe work, fittings and control panel shall be installed in accordance with manufacturers recommendations.
- Orientation of valve chamber pipework to suit location.
- All structural concrete shall be of grade C35A.
- All castings shall be done using sulphate resistant portland cement to BS 4027:1996.
- All structural reinforcement shall be epoxy coating of non-pre-stressed reinforcement to ASTM-A775/A775M.
- A cover of 75mm should be given for all reinforcements.
- Internal concrete surfaces to be coated with 5mm thickness of epoxy bonded glass fibre and finished with gel coat or 500 microns epoxy paint coating.
- External concrete surfaces to be painted with 3 coats of bitumen/rubber emulsion and protected by 500 micron polyethene.

List of main instruments of pumping station:
1. Sewage pumps (1 duty & 1 standby)
2. Power cable
3. Auto-coupling with 40Ø SS guide rail
4. Stainless steel (316) suspension chain
5. Cable with float control and weight
6. Discharge pipe
7. Puddle flange
8. Bitumen emulsion and 500 micron polythene sheet protection to external concrete surfaces
9. Construction joint / water bars
10. Manhole cover double seal ductile heavy duty cast iron / SS 316 cover
11. Vent pipe with vent cowl

| REV. NO. | Date | Revision Description | Drawn | Chkd | Appd. |
|---|---|---|---|---|---|
| | | | | | |
| | | | | | |
| | | | | | |
| | | | | | |
| | | | | | |
| | | | | | |

Title:
**Consultancy Services for Survey, Design and EIA works of Water Supply and Sewerage Facilities in 7 islands, Maldives - Pakage 6**

Sub Title:
**Water Supply System in L. Kunahandhoo**

Client:
**Ministry of National Planning, Housing and Infrastructure, Republic of Maldives**

EPOCH ASSOCIATES
T: +960 333 3528
E: info@epoch.associates
W: wwww.epoch.associates
A: G. Rosary West, Husnuheenaa Magu, Male', Maldives

FEEDBACK INFRA
Making Infrastructure Happen

Drawn: F.I.A.
Checked: M.S.S.
Designed: F.I.A.
Approved: I.W.
Date: Aug 2020
SCALE (A3): NTS
Project No: 01010101
Rev:
Page: W-(7)

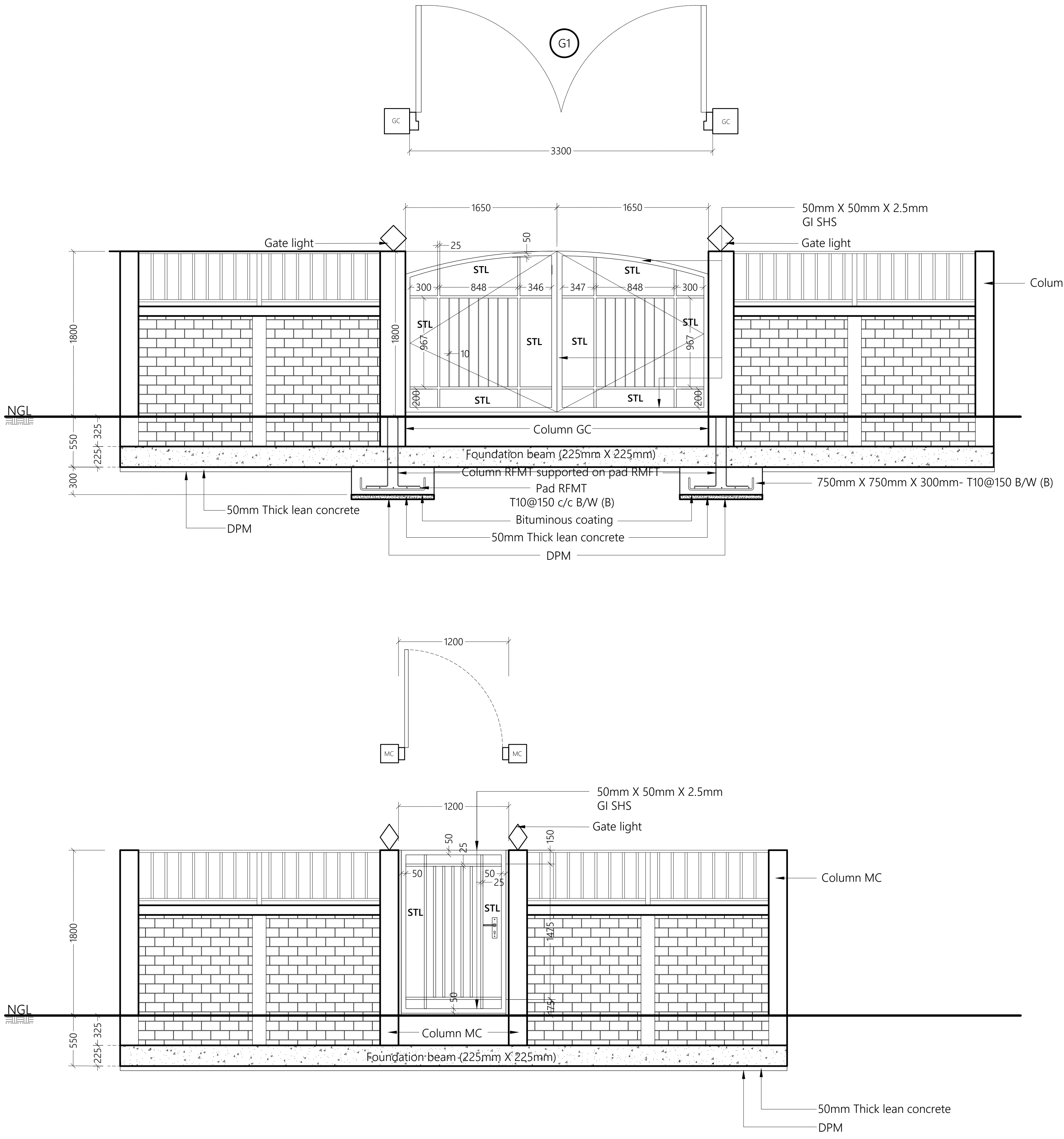
G1
GC
GC
3300
1650
1650
50mm X 50mm X 2.5mm
GI SHS
Gate light
Gate light
25
50
STL
300
848
346
347
300
1800
967
10
200
NGL
550
325
225
300
Column MC
Column GC
Foundation beam (225mm X 225mm)
Column RFMT supported on pad RMFT
Pad RFMT
T10@150 c/c B/W (B)
Bituminous coating
50mm Thick lean concrete
DPM
750mm X 750mm X 300mm- T10@150 B/W (B)
50mm Thick lean concrete
DPM
1200
MC
MC
1200
50mm X 50mm X 2.5mm
GI SHS
Gate light
Column MC
50
25
150
STL
1475
175
Column MC
Foundation beam (225mm X 225mm)
50mm Thick lean concrete
DPM

## GATE DETAILS

1:50

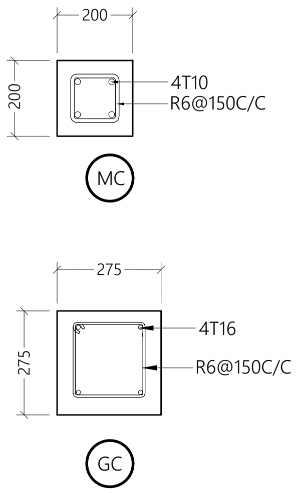
200
200
4T10
R6@150C/C
MC
275
275
4T16
R6@150C/C
GC

## COLUMN DETAILS

1:20

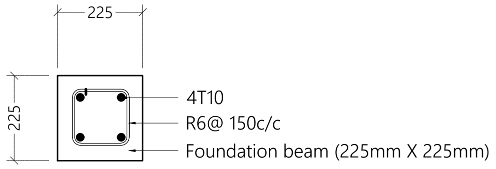
225
225
4T10
R6@ 150c/c
Foundation beam (225mm X 225mm)

## FOUNDATION BEAM DETAIL

1:20

Legend

Note:

- FRAME MATERIAL : Steel gate frame 2.5mm thick GI sections RHS
- PANEL MATERIAL : Steel frame with steel panels (STL) as shown on elevation view
- All steel members and GI SHS to be applied with 2 coats of anti-corrosive paint with epoxy finishing paint
- Allowance shall be made to fix pad lock in Gates

| REV. NO. | Date | Revision Description | Drawn | Chkd | Appd. |
|---|---|---|---|---|---|
|  |  |  |  |  |  |
|  |  |  |  |  |  |
|  |  |  |  |  |  |
|  |  |  |  |  |  |
|  |  |  |  |  |  |
|  |  |  |  |  |  |

Title:
**Consultancy Services for Survey, Design and EIA works of Water Supply and Sewerage Facilities in 7 islands, Maldives - Pakage 6**

Sub Title:
**Water Supply System in L. Kunahandhoo**

Client:
**Ministry of National Planning, Housing and Infrastructure, Republic of Maldives**

EPOCH ASSOCIATES
**T**: +960 333 3528
**E**: info@epoch.associates
**W**: wwww.epoch.associates
**A**: G. Rosary West,
Husnuheenaa Magu, Male', Maldives

FEEDBACK INFRA
Making Infrastructure Happen

Drawn: F.I.A.
Checked: M.S.S.
Designed: F.I.A.
Approved: I.W.
Date: Aug 2020
SCALE (A3):
Project No: 01010101
Rev:
Page: W-(8)

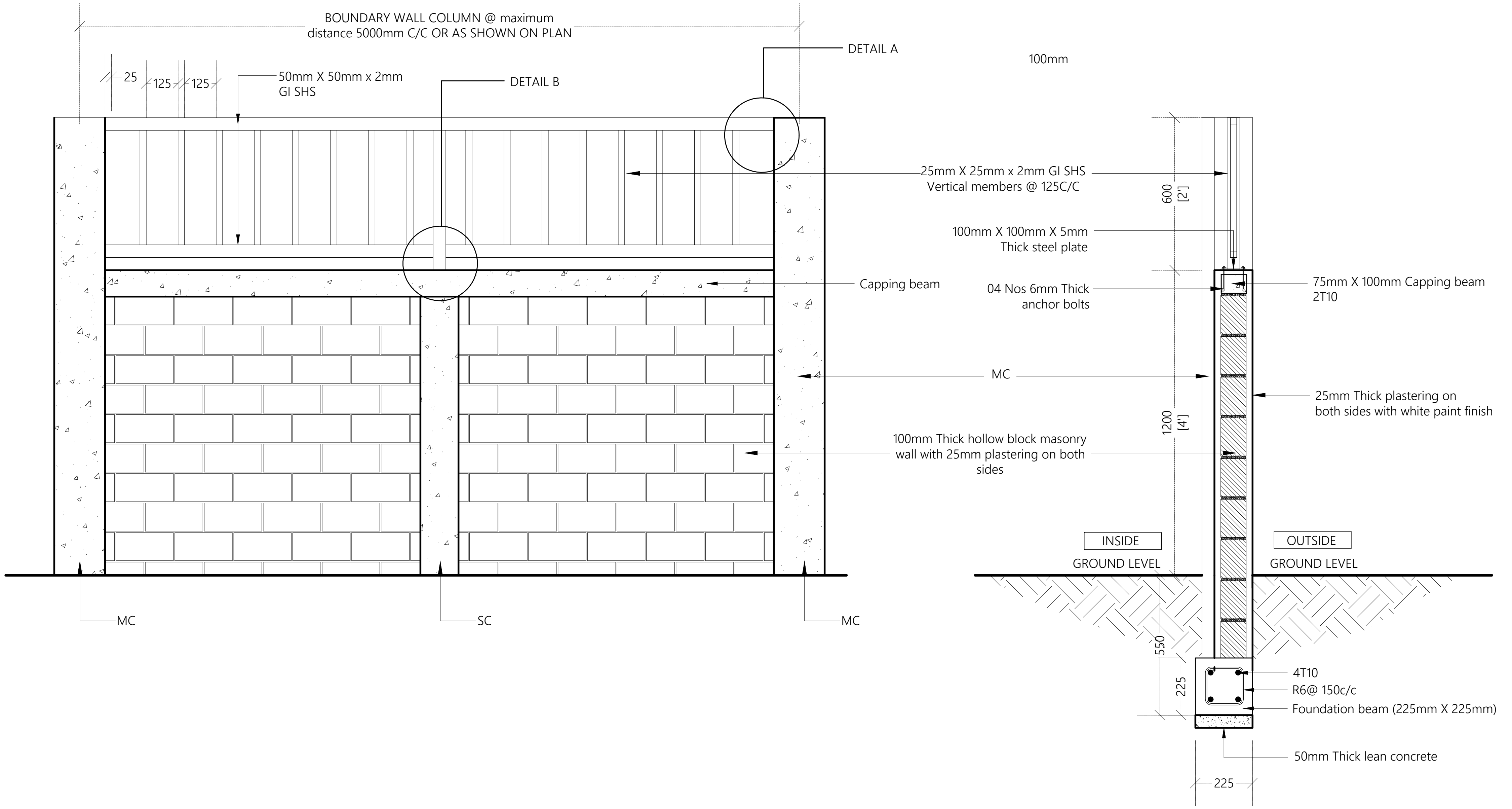
BOUNDARY WALL COLUMN @ maximum distance 5000mm C/C OR AS SHOWN ON PLAN
25
125
125
50mm X 50mm x 2mm GI SHS
DETAIL B
DETAIL A
100mm
25mm X 25mm x 2mm GI SHS Vertical members @ 125C/C
600 [2']
100mm X 100mm X 5mm Thick steel plate
Capping beam
04 Nos 6mm Thick anchor bolts
75mm X 100mm Capping beam 2T10
MC
1200 [4']
25mm Thick plastering on both sides with white paint finish
100mm Thick hollow block masonry wall with 25mm plastering on both sides
INSIDE
GROUND LEVEL
OUTSIDE
GROUND LEVEL
MC
SC
MC
550
225
4T10
R6@ 150c/c
Foundation beam (225mm X 225mm)
50mm Thick lean concrete
225

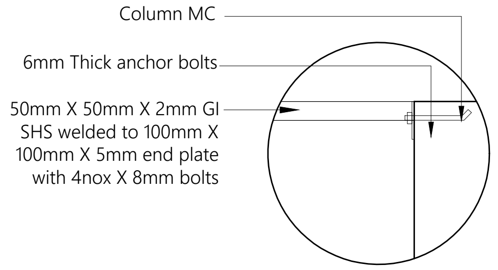
Column MC
6mm Thick anchor bolts
50mm X 50mm X 2mm GI SHS welded to 100mm X 100mm X 5mm end plate with 4nox X 8mm bolts

## DETAIL A

1:10

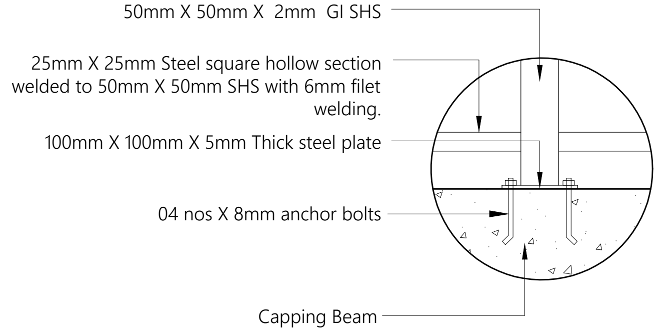
50mm X 50mm X 2mm GI SHS
25mm X 25mm Steel square hollow section welded to 50mm X 50mm SHS with 6mm filet welding.
100mm X 100mm X 5mm Thick steel plate
04 nos X 8mm anchor bolts
Capping Beam

## DETAIL B

1:10

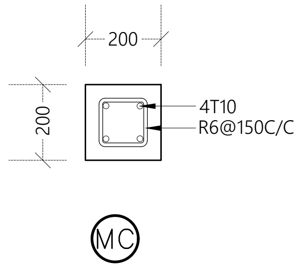
200
200
4T10
R6@150C/C
MC

MAIN COLUMN
@ maximum distance 5000mm C/C

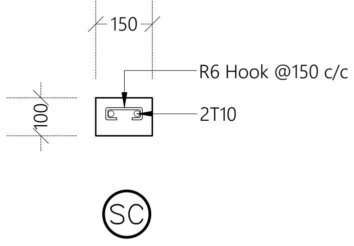
150
100
R6 Hook @150 c/c
2T10
SC

STIFFENER COLUMN
(in between two main columns)

## BOUNDARY WALL AND FENCING DETAILS

1:20

Legend

Note:

- FRAME MATERIAL : Steel gate frame 2.5mm thick GI sections SHS
- All steel members and GI SHS to be applied with 2 coats of anti-corrosive paint with epoxy finishing paint
- Allowance shall be made to fix pad lock in Gates

| | | | | | |
|---|---|---|---|---|---|
| | | | | | |
| | | | | | |
| | | | | | |
| | | | | | |
| | | | | | |
| REV. NO. | Date | Revision Description | Drawn | Chkd | Appd. |

Title:
**Consultancy Services for Survey, Design and EIA works of Water Supply and Sewerage Facilities in 7 islands, Maldives - Pakage 6**

Sub Title:
Water Supply System in L. Kunahandhoo

Client:
Ministry of National Planning, Housing and Infrastructure, Republic of Maldives

EPOCH ASSOCIATES
T: +960 333 3528
E: info@epoch.associates
W: wwww.epoch.associates
A: G. Rosary West,
Husnuheenaa Magu, Male', Maldives

| | | | |
|---|---|---|---|
| Drawn: | F.I.A. | Checked: | M.S.S. |
| Designed: | F.I.A. | Approved: | I.W. |
| Date: | Aug 2020 | SCALE (A3): | 1:20 |
| Project No: | 01010101 | | |
| Rev: | | Page: | W-(9) |

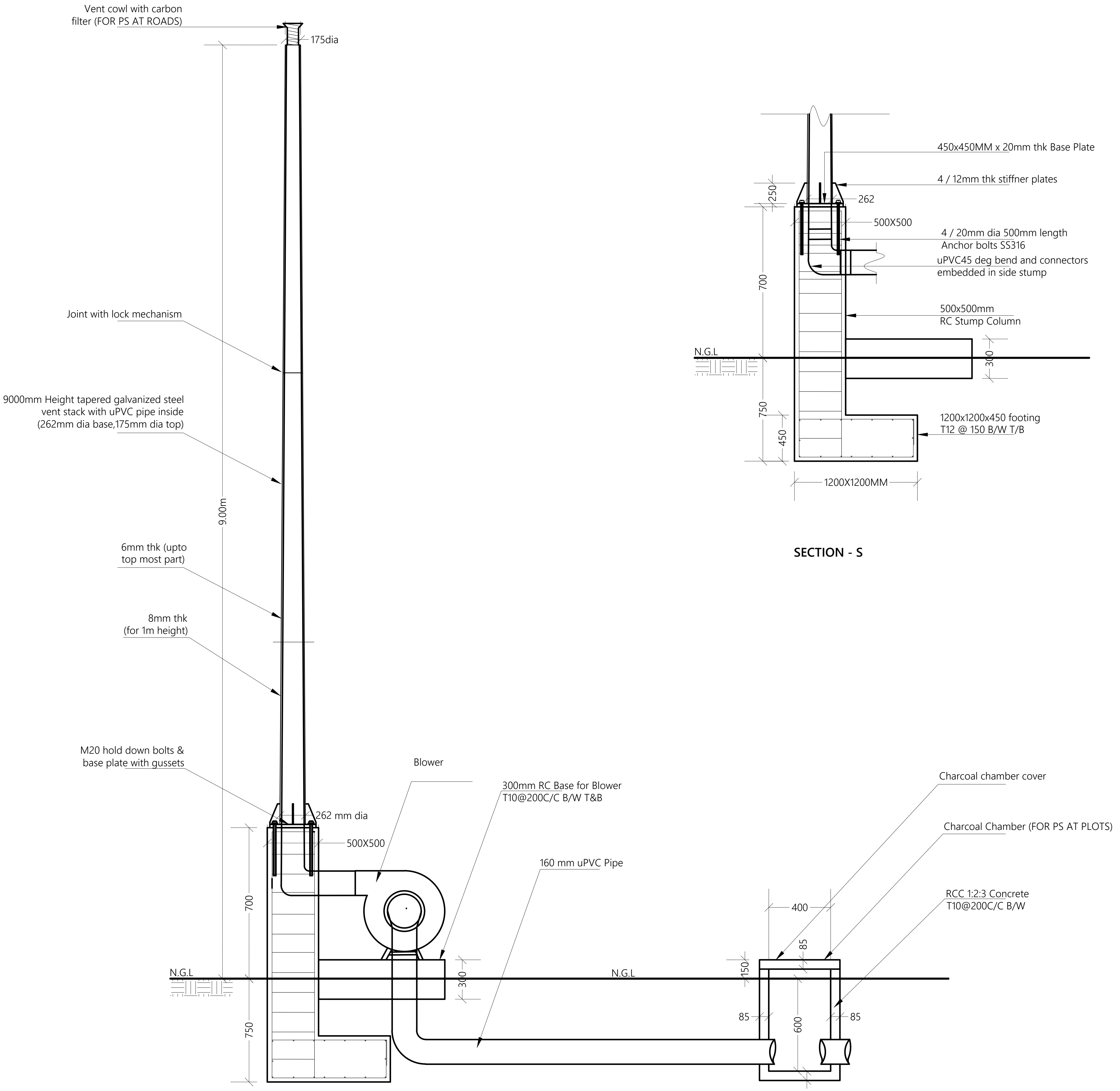
Vent cowl with carbon filter (FOR PS AT ROADS)
175dia
Joint with lock mechanism
9000mm Height tapered galvanized steel vent stack with uPVC pipe inside (262mm dia base,175mm dia top)
9.00m
6mm thk (upto top most part)
8mm thk (for 1m height)
M20 hold down bolts & base plate with gussets
262 mm dia
500X500
Blower
300mm RC Base for Blower T10@200C/C B/W T&B
160 mm uPVC Pipe
700
750
N.G.L
300
N.G.L
Charcoal chamber cover
Charcoal Chamber (FOR PS AT PLOTS)
RCC 1:2:3 Concrete T10@200C/C B/W
400
85
150
85
600
85
100
450x450MM x 20mm thk Base Plate
4 / 12mm thk stiffner plates
262
250
500X500
4 / 20mm dia 500mm length Anchor bolts SS316
uPVC45 deg bend and connectors embedded in side stump
700
500x500mm RC Stump Column
N.G.L
300
750
450
1200x1200x450 footing T12 @ 150 B/W T/B
1200X1200MM

SECTION - S

ELEVATION - VENT STACK

VENT STACK DETAILS

NTS

Legend

Note:

| REV. NO. | Date | Revision Description | Drawn | Chkd | Appd. |
|---|---|---|---|---|---|
| | | | | | |
| | | | | | |
| | | | | | |
| | | | | | |
| | | | | | |
| | | | | | |

Title:
**Consultancy Services for Survey, Design and EIA works of Water Supply and Sewerage Facilities in 7 islands, Maldives - Pakage 6**

Sub Title:
**Water Supply System in L. Kunahandhoo**

Client:
**Ministry of National Planning, Housing and Infrastructure, Republic of Maldives**

EPOCH ASSOCIATES
**T**: +960 333 3528
**E**: info@epoch.associates
**W**: wwww.epoch.associates
**A**: G. Rosary West,
Husnuheenaa Magu, Male', Maldives

FEEDBACK INFRA
Making Infrastructure Happen

Drawn: F.I.A.
Checked: M.S.S.
Designed: F.I.A.
Approved: I.W.
Date: Aug 2020
SCALE (A3): NTS
Project No: 01010101
Rev:
Page: W-(10)

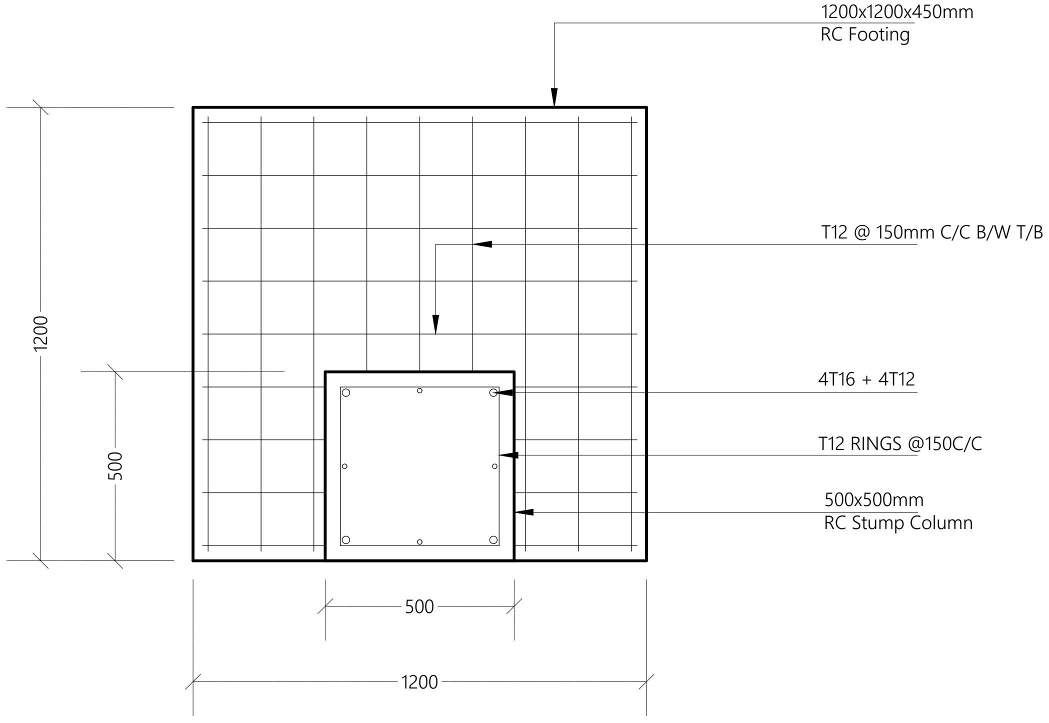
1200x1200x450mm
RC Footing
T12 @ 150mm C/C B/W T/B
4T16 + 4T12
T12 RINGS @150C/C
500x500mm
RC Stump Column
1200
500
500
1200

FOOTING & STUMP DETAILS OF VENT STACK

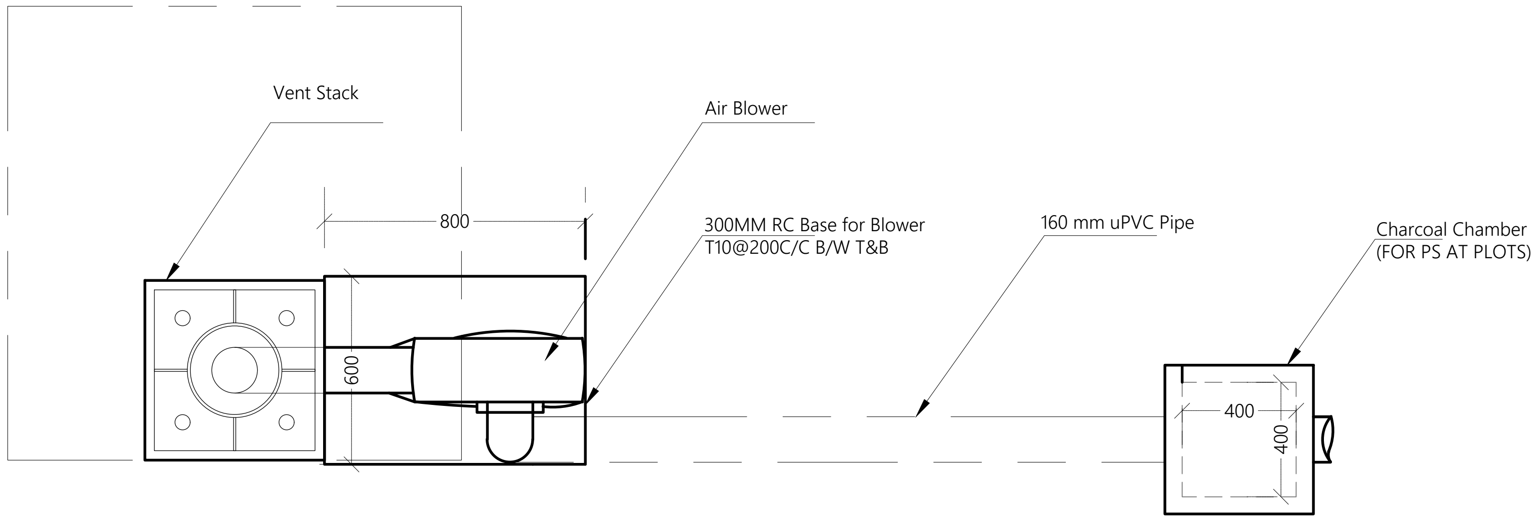
Vent Stack
Air Blower
800
300MM RC Base for Blower
T10@200C/C B/W T&B
160 mm uPVC Pipe
Charcoal Chamber
(FOR PS AT PLOTS)
600
400
400

AIR BLOWER DETAILS (Plan View)

Legend

Note:

| | | | | | |
|---|---|---|---|---|---|
| | | | | | |
| | | | | | |
| | | | | | |
| | | | | | |
| | | | | | |
| | | | | | |
| REV. NO. | Date | Revision Description | Drawn | Chkd | Appd. |

Title:
**Consultancy Services for Survey, Design and EIA works of Water Supply and Sewerage Facilities in 7 islands, Maldives - Pakage 6**

Sub Title:
**Water Supply System in L. Kunahandhoo**

Client:
**Ministry of National Planning, Housing and Infrastructure, Republic of Maldives**

EPOCH ASSOCIATES
**T**: +960 333 3528
**E**: info@epoch.associates
**W**: wwww.epoch.associates
**A**: G. Rosary West,
Husnuheenaa Magu, Male', Maldives

FEEDBACK INFRA
Making Infrastructure Happen

Drawn: F.I.A.
Checked: M.S.S.
Designed: F.I.A.
Approved: I.W.
Date: Aug 2020
SCALE (A3): NTS
Project No: 01010101
Rev:
Page: W-(11)

VENT STACK AND AIR BLOWER DETAILS

NTS

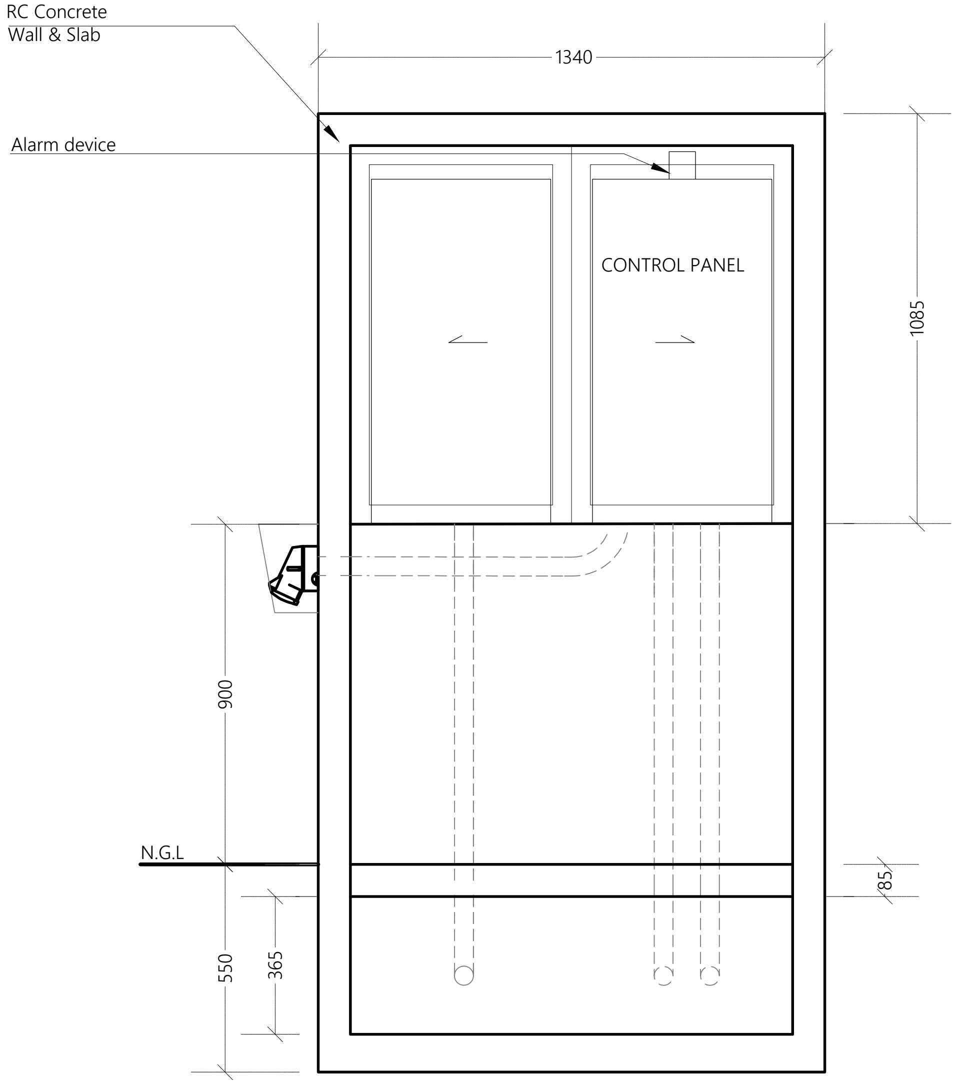
RC Concrete
Wall & Slab
Alarm device
1340
CONTROL PANEL
1085
900
N.G.L
550
365
85

PANEL BOARD FOR PS - FRONT VIEW

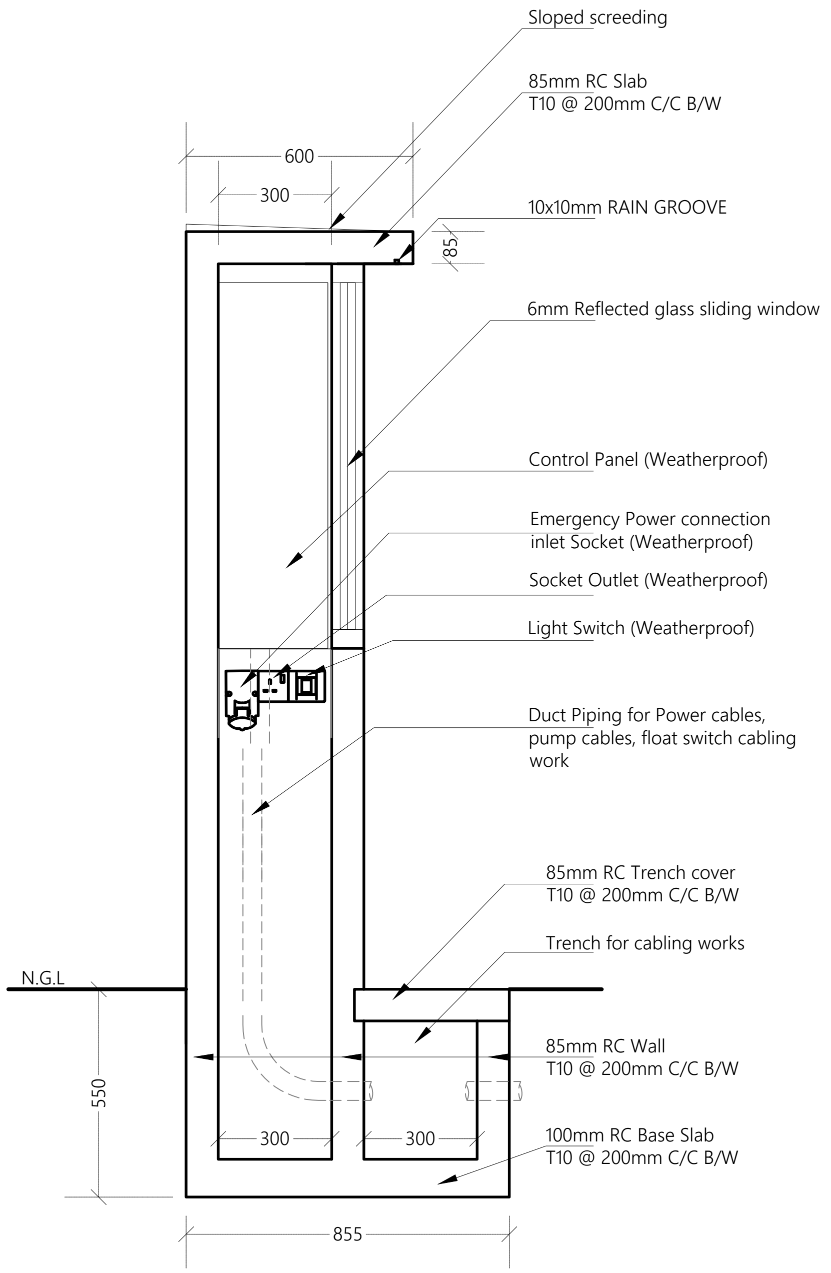
Sloped screeding
85mm RC Slab
T10 @ 200mm C/C B/W
600
300
10x10mm RAIN GROOVE
85
6mm Reflected glass sliding window
Control Panel (Weatherproof)
Emergency Power connection
inlet Socket (Weatherproof)
Socket Outlet (Weatherproof)
Light Switch (Weatherproof)
Duct Piping for Power cables,
pump cables, float switch cabling
work
N.G.L
85mm RC Trench cover
T10 @ 200mm C/C B/W
Trench for cabling works
85mm RC Wall
T10 @ 200mm C/C B/W
550
300
300
100mm RC Base Slab
T10 @ 200mm C/C B/W
855

PANEL BOARD FOR PS - SIDE VIEW

## CONTROL PANEL BOARD DETAILS

NTS

Legend

Note:

| REV. NO. | Date | Revision Description | Drawn | Chkd | Appd. |
|---|---|---|---|---|---|

Title:
**Consultancy Services for Survey, Design and EIA works of Water Supply and Sewerage Facilities in 7 islands, Maldives - Pakage 6**

Sub Title:
**Water Supply System in L. Kunahandhoo**

Client:
**Ministry of National Planning, Housing and Infrastructure, Republic of Maldives**

EPOCH ASSOCIATES
**T**: +960 333 3528
**E**: info@epoch.associates
**W**: wwww.epoch.associates
**A**: G. Rosary West,
Husnuheenaa Magu, Male', Maldives

FEEDBACK INFRA
Making Infrastructure Happen

Drawn: F.I.A.
Checked: M.S.S.
Designed: F.I.A.
Approved: I.W.
Date: Aug 2020
SCALE (A3): NTS
Project No: 01010101
Rev:
Page: W-(12)

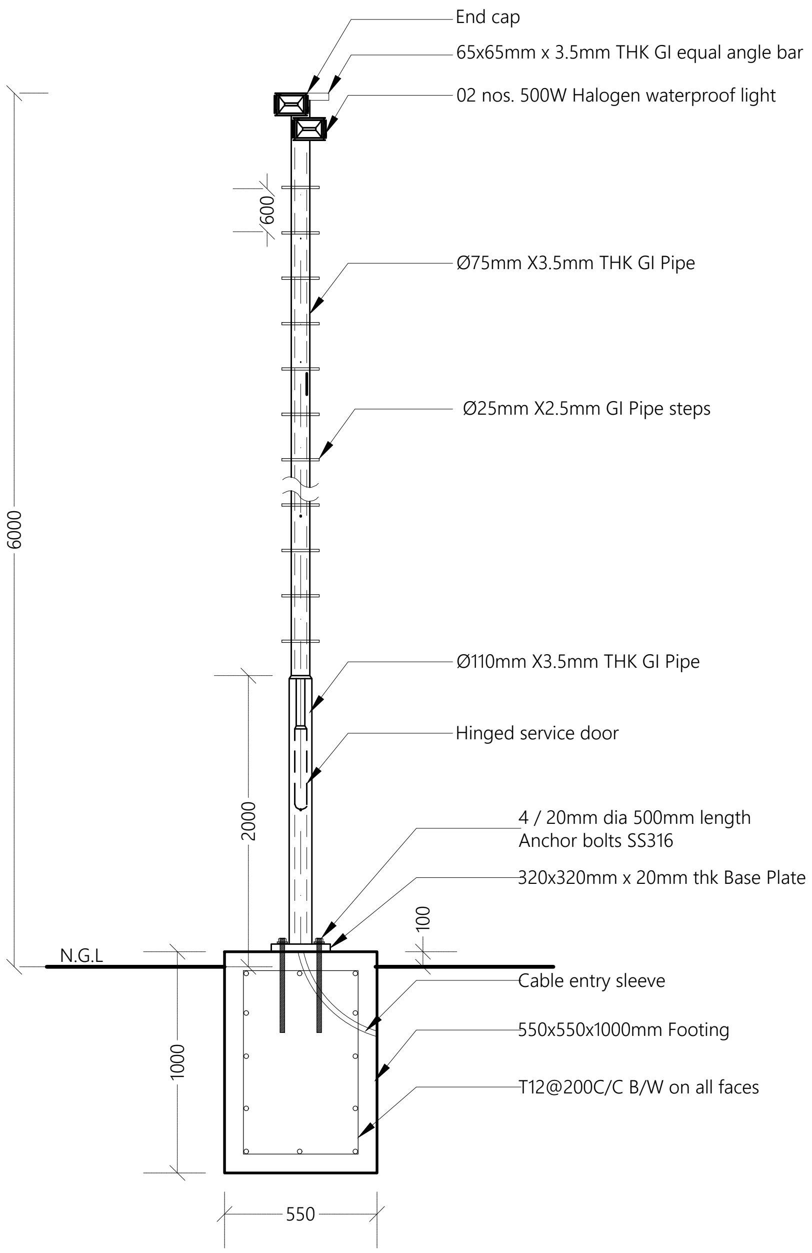
End cap
65x65mm x 3.5mm THK GI equal angle bar
02 nos. 500W Halogen waterproof light
600
Ø75mm X3.5mm THK GI Pipe
Ø25mm X2.5mm GI Pipe steps
6000
Ø110mm X3.5mm THK GI Pipe
Hinged service door
2000
4 / 20mm dia 500mm length
Anchor bolts SS316
320x320mm x 20mm thk Base Plate
100
N.G.L
Cable entry sleeve
550x550x1000mm Footing
1000
T12@200C/C B/W on all faces
550

LIGHT POST DETAILS FOR STP COMPOUND (LP1)

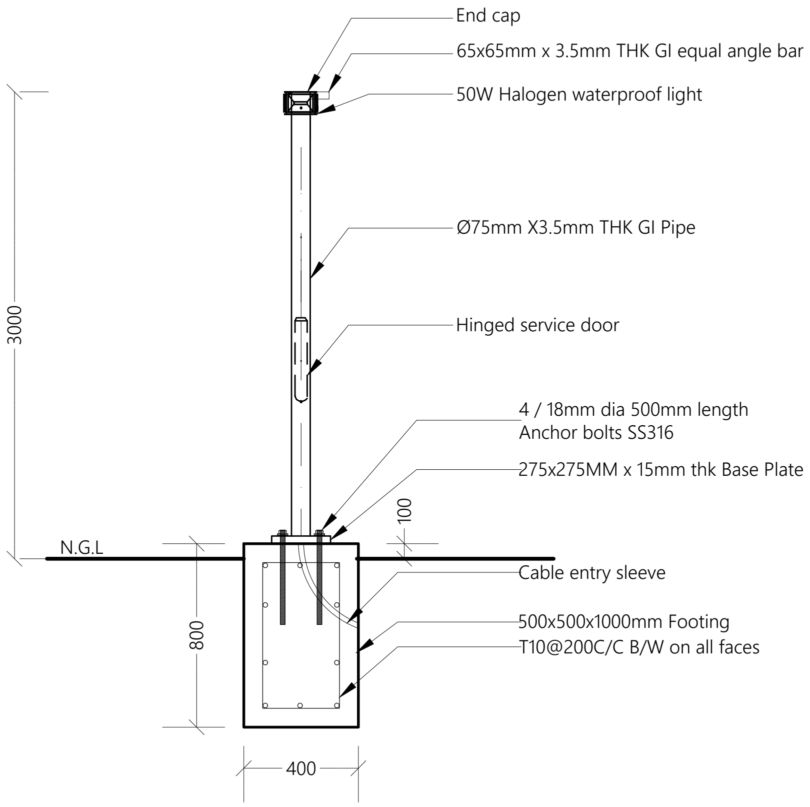
End cap
65x65mm x 3.5mm THK GI equal angle bar
50W Halogen waterproof light
Ø75mm X3.5mm THK GI Pipe
3000
Hinged service door
4 / 18mm dia 500mm length
Anchor bolts SS316
275x275MM x 15mm thk Base Plate
100
N.G.L
Cable entry sleeve
500x500x1000mm Footing
T10@200C/C B/W on all faces
800
400

LIGHT POST DETAILS FOR PUMP STATION (LP2)

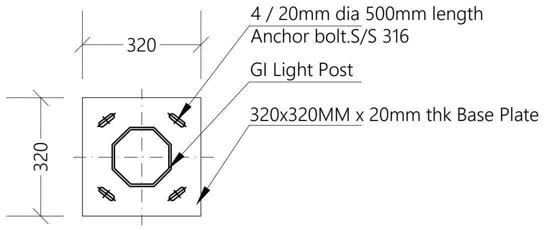
320
4 / 20mm dia 500mm length
Anchor bolt.S/S 316
GI Light Post
320x320MM x 20mm thk Base Plate
320

BASE PLATE (LP1)

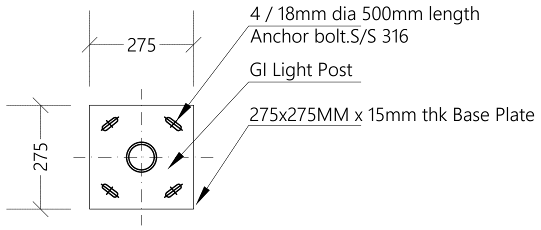
275
4 / 18mm dia 500mm length
Anchor bolt.S/S 316
GI Light Post
275x275MM x 15mm thk Base Plate
275

BASE PLATE (LP2)

NOTE:
- CONCRETE COVER :50mm
- All steel members and GI SHS to be applied with 2 coats of anti-corrosive paint with epoxy finishing paint

LIGHT POST DETAILS

NTS

Legend

Note:

| REV. NO. | Date | Revision Description | Drawn | Chkd | Appd. |
|---|---|---|---|---|---|
| | | | | | |
| | | | | | |
| | | | | | |
| | | | | | |
| | | | | | |
| | | | | | |

Title:
Consultancy Services for Survey, Design and EIA works of Water Supply and Sewerage Facilities in 7 islands, Maldives - Pakage 6

Sub Title:
Water Supply System in L. Kunahandhoo

Client:
Ministry of National Planning, Housing and Infrastructure, Republic of Maldives

EPOCH ASSOCIATES
**T**: +960 333 3528
**E**: info@epoch.associates
**W**: wwww.epoch.associates
**A**: G. Rosary West,
Husnuheenaa Magu, Male', Maldives

FEEDBACK INFRA
Making Infrastructure Happen

| | | | |
|---|---|---|---|
| Drawn: | F.I.A. | Checked: | M.S.S. |
| Designed: | F.I.A. | Approved: | I.W. |
| Date: | Aug 2020 | SCALE (A3): | NTS |
| Project No: | 01010101 | | |
| Rev: | | Page: | W-(13) |

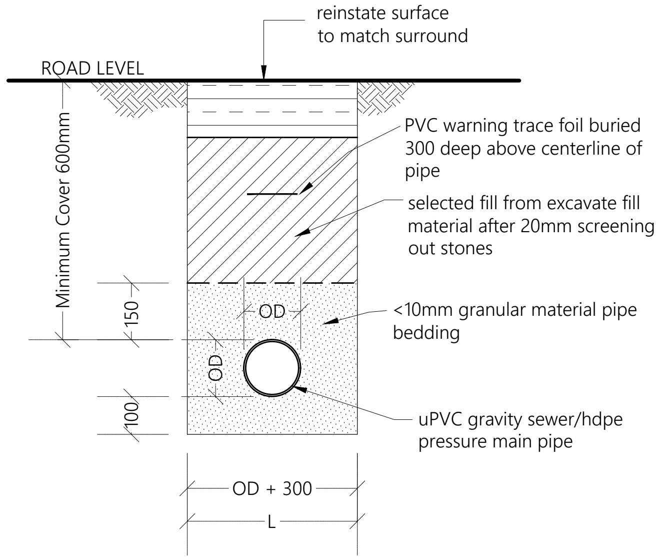
reinstate surface
to match surround
ROAD LEVEL
PVC warning trace foil buried
300 deep above centerline of
pipe
selected fill from excavate fill
material after 20mm screening
out stones
<10mm granular material pipe
bedding
uPVC gravity sewer/hdpe
pressure main pipe
Minimum Cover 600mm
150
OD
OD
100
OD + 300
L

TRENCH & BEDDING DETAILS

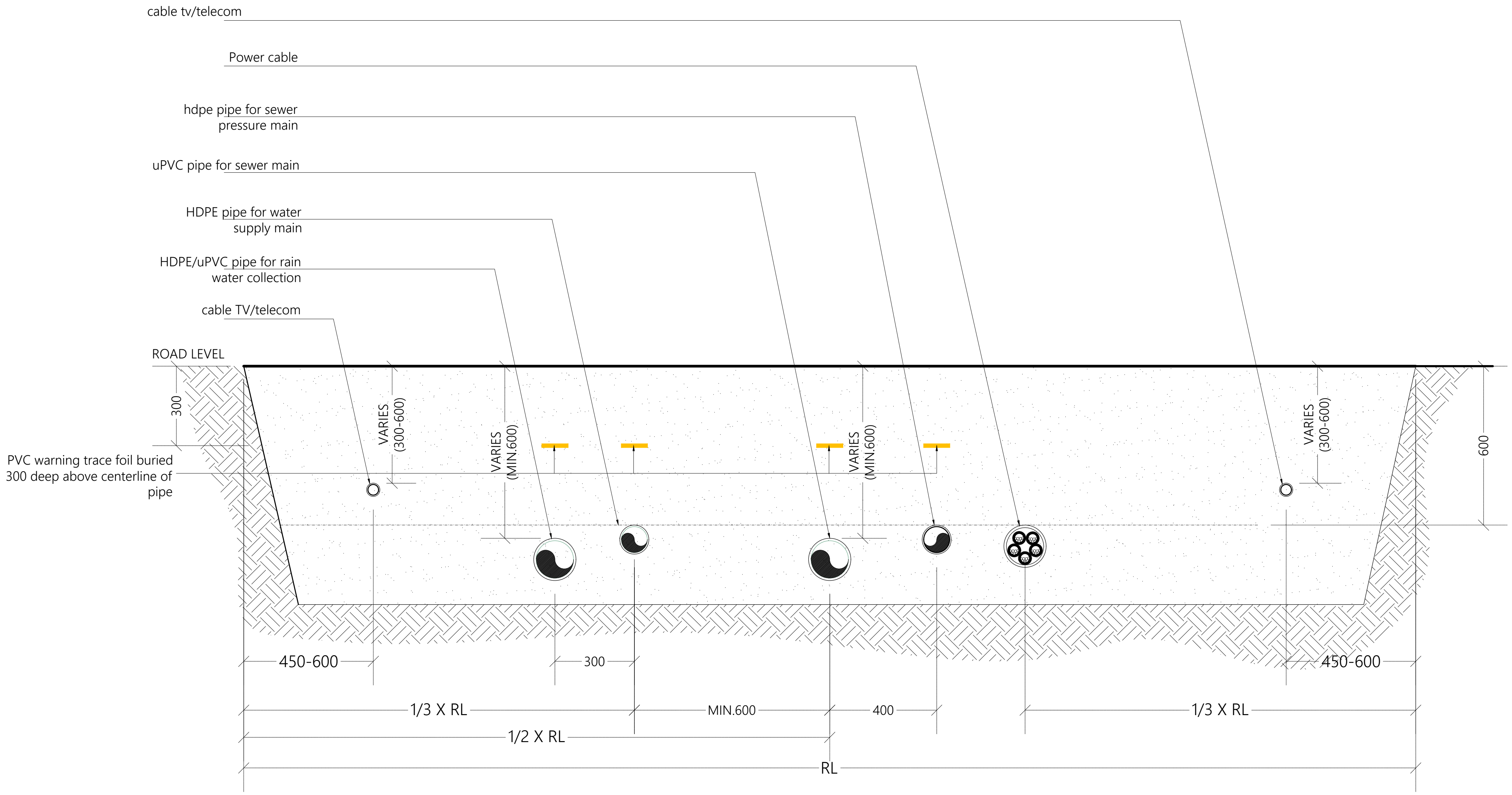
cable tv/telecom
Power cable
hdpe pipe for sewer
pressure main
uPVC pipe for sewer main
HDPE pipe for water
supply main
HDPE/uPVC pipe for rain
water collection
cable TV/telecom
ROAD LEVEL
300
PVC warning trace foil buried
300 deep above centerline of
pipe
VARIES
(300-600)
VARIES
(MIN.600)
VARIES
(MIN.600)
VARIES
(300-600)
600
450-600
300
450-600
1/3 X RL
MIN.600
400
1/3 X RL
1/2 X RL
RL

TYPICAL ROAD SECTION

TRENCH AND BEDDING DETAILS

1:20

Legend

Note:

| REV. NO. | Date | Revision Description | Drawn | Chkd | Appd. |
|---|---|---|---|---|---|
| | | | | | |
| | | | | | |
| | | | | | |
| | | | | | |
| | | | | | |
| | | | | | |

Title:

**Consultancy Services for Survey, Design and EIA works of Water Supply and Sewerage Facilities in 7 islands, Maldives - Pakage 6**

Sub Title:

**Water Supply System in L. Kunahandhoo**

Client:

**Ministry of National Planning, Housing and Infrastructure, Republic of Maldives**

**T**: +960 333 3528
**E**: info@epoch.associates
**W**: wwww.epoch.associates
**A**: G. Rosary West,
Husnuheenaa Magu, Male', Maldives

Drawn: F.I.A.
Checked: M.S.S.
Designed: F.I.A.
Approved: I.W.
Date: Aug 2020
SCALE (A3): 1:20
Project No: 01010101
Rev:
Page: W-(14)

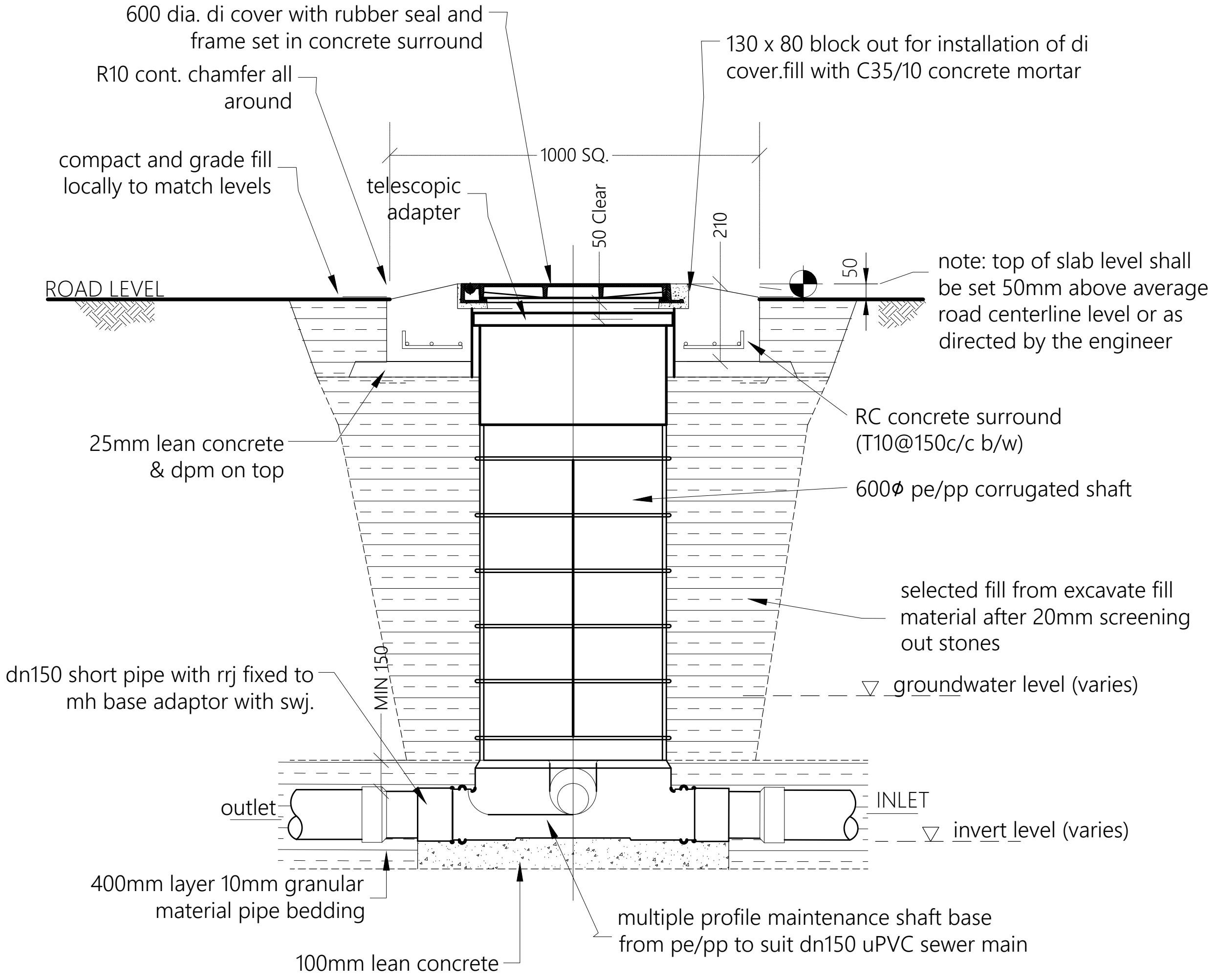
600 dia. di cover with rubber seal and frame set in concrete surround
R10 cont. chamfer all around
130 x 80 block out for installation of di cover.fill with C35/10 concrete mortar
compact and grade fill locally to match levels
1000 SQ.
telescopic adapter
50 Clear
210
50
ROAD LEVEL
note: top of slab level shall be set 50mm above average road centerline level or as directed by the engineer
RC concrete surround (T10@150c/c b/w)
25mm lean concrete & dpm on top
600ϕ pe/pp corrugated shaft
selected fill from excavate fill material after 20mm screening out stones
dn150 short pipe with rrj fixed to mh base adaptor with swj.
MIN 150
groundwater level (varies)
outlet
INLET
invert level (varies)
400mm layer 10mm granular material pipe bedding
multiple profile maintenance shaft base from pe/pp to suit dn150 uPVC sewer main
100mm lean concrete

ELEVATION - MAINTENANCE SHAFT (MH)

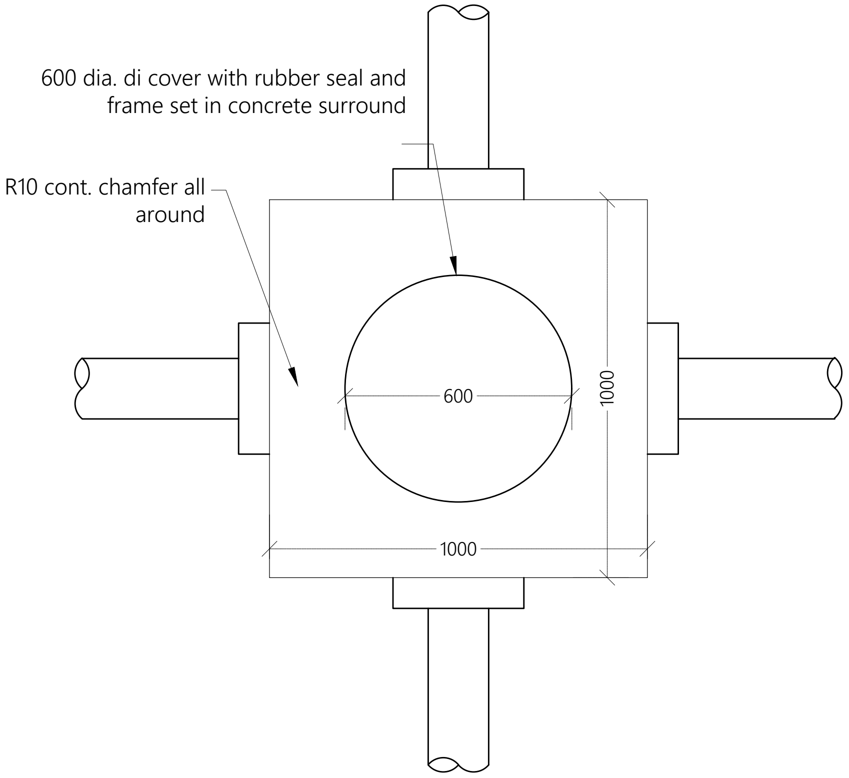
600 dia. di cover with rubber seal and frame set in concrete surround
R10 cont. chamfer all around
600
1000
1000

PLAN VIEW - MAINTENANCE SHAFT (MH)

Legend

Note:

| | | | | | |
|---|---|---|---|---|---|
| | | | | | |
| | | | | | |
| | | | | | |
| | | | | | |
| | | | | | |
| | | | | | |
| REV. NO. | Date | Revision Description | Drawn | Chkd | Appd. |

Title:
**Consultancy Services for Survey, Design and EIA works of Water Supply and Sewerage Facilities in 7 islands, Maldives - Pakage 6**

Sub Title:
**Water Supply System in L. Kunahandhoo**

Client:
**Ministry of National Planning, Housing and Infrastructure, Republic of Maldives**

EPOCH ASSOCIATES
**T**: +960 333 3528
**E**: info@epoch.associates
**W**: wwww.epoch.associates
**A**: G. Rosary West,
Husnuheenaa Magu, Male', Maldives

FEEDBACK INFRA
Making Infrastructure Happen

Drawn: F.I.A.
Checked: M.S.S.
Designed: F.I.A.
Approved: I.W.
Date: Aug 2020
SCALE (A3): 1:20
Project No: 01010101
Rev:
Page: W-(15)

MAINTENANCE SHAFT (MH) DETAILS
1:20

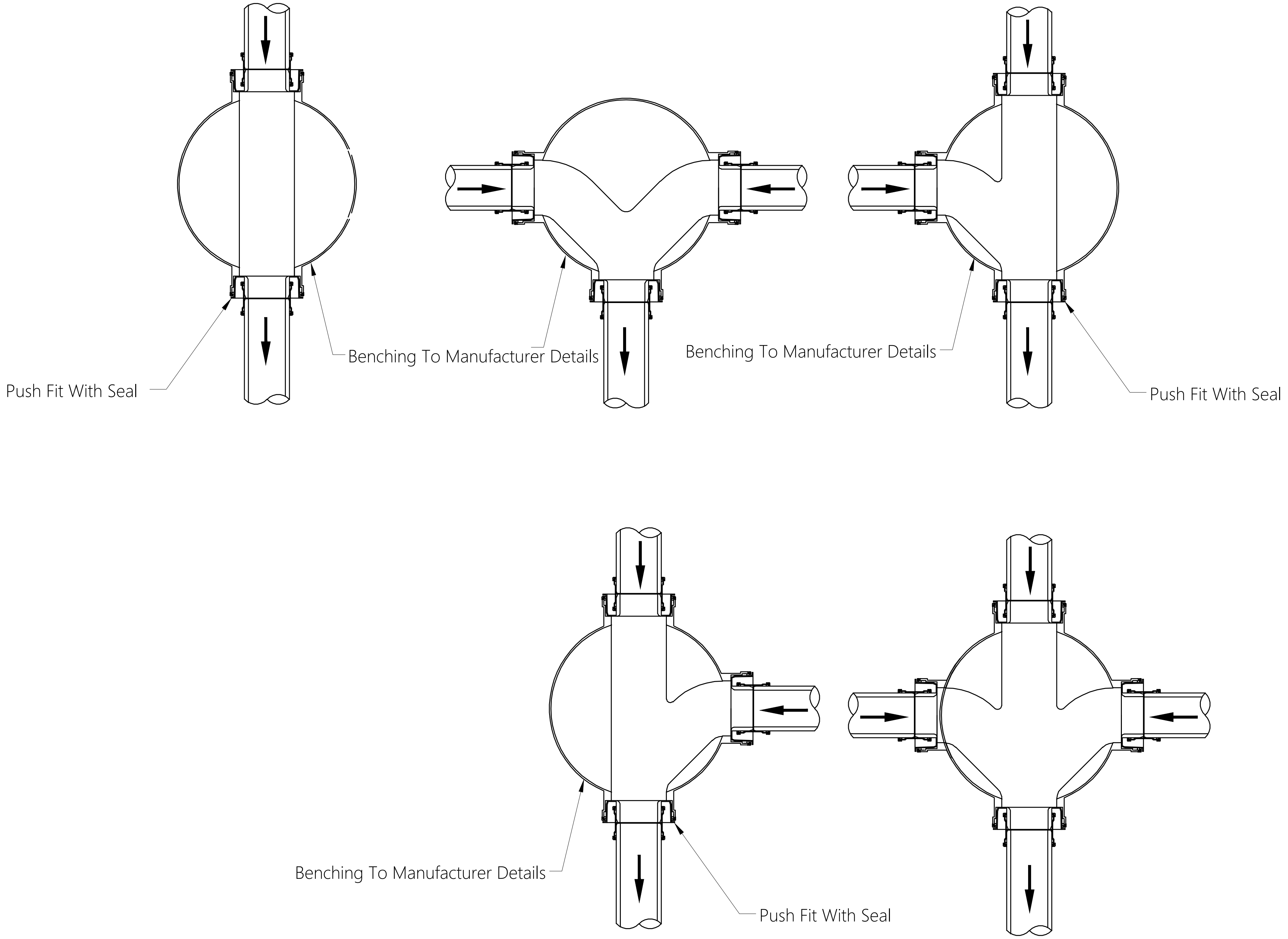
Push Fit With Seal
Benching To Manufacturer Details
Benching To Manufacturer Details
Push Fit With Seal
Benching To Manufacturer Details
Push Fit With Seal

## TYPICAL MANHOLE BASE DETAILS

NTS

Legend

Note:

| REV. NO. | Date | Revision Description | Drawn | Chkd | Appd. |
|---|---|---|---|---|---|
| | | | | | |
| | | | | | |
| | | | | | |
| | | | | | |
| | | | | | |
| | | | | | |

Title:
**Consultancy Services for Survey, Design and EIA works of Water Supply and Sewerage Facilities in 7 islands, Maldives - Pakage 6**

Sub Title:
**Water Supply System in L. Kunahandhoo**

Client:
**Ministry of National Planning, Housing and Infrastructure, Republic of Maldives**

EPOCH ASSOCIATES
**T**: +960 333 3528
**E**: info@epoch.associates
**W**: wwww.epoch.associates
**A**: G. Rosary West,
Husnuheenaa Magu, Male', Maldives

FEEDBACK INFRA
Making Infrastructure Happen

Drawn: F.I.A.
Checked: M.S.S.
Designed: F.I.A.
Approved: I.W.
Date: Aug 2020
SCALE (A3): NTS
Project No: 01010101
Rev:
Page: W-(16)

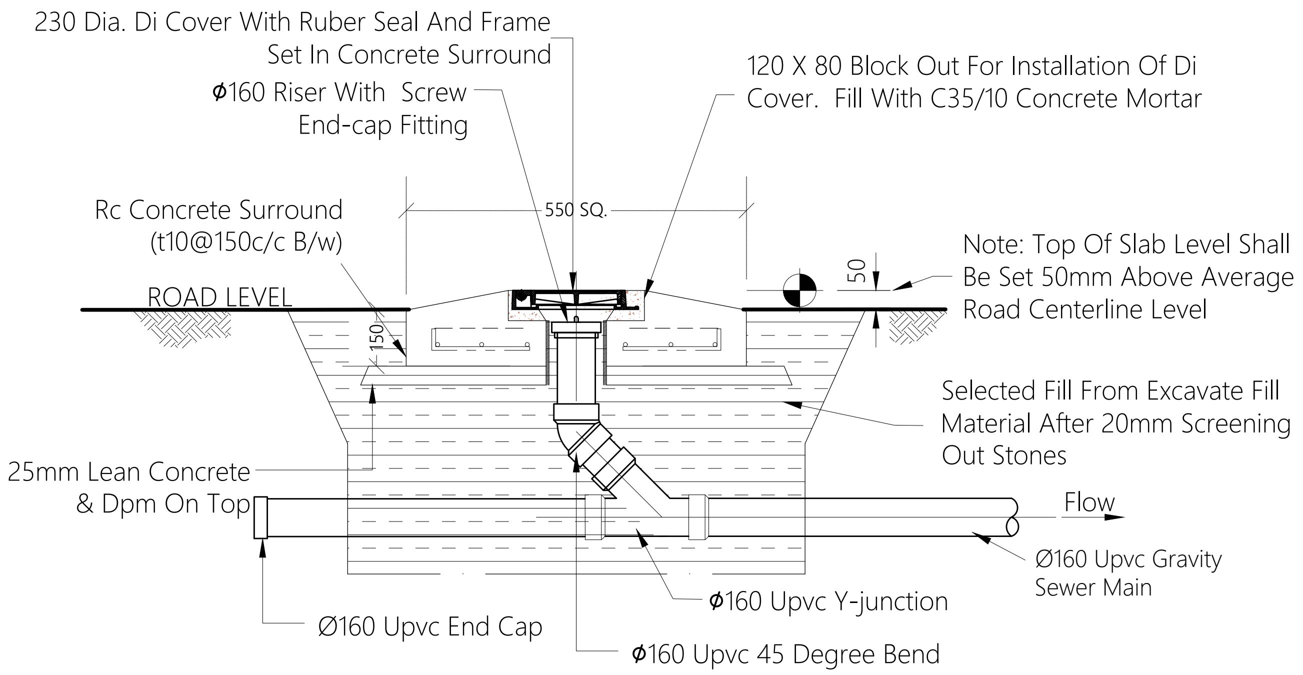
230 Dia. Di Cover With Ruber Seal And Frame Set In Concrete Surround
ϕ160 Riser With Screw End-cap Fitting
120 X 80 Block Out For Installation Of Di Cover. Fill With C35/10 Concrete Mortar
Rc Concrete Surround (t10@150c/c B/w)
550 SQ.
50
Note: Top Of Slab Level Shall Be Set 50mm Above Average Road Centerline Level
ROAD LEVEL
150
Selected Fill From Excavate Fill Material After 20mm Screening Out Stones
25mm Lean Concrete & Dpm On Top
Flow
Ø160 Upvc Gravity Sewer Main
ϕ160 Upvc Y-junction
Ø160 Upvc End Cap
ϕ160 Upvc 45 Degree Bend

ELEVATION - CLEANOUT (CO)

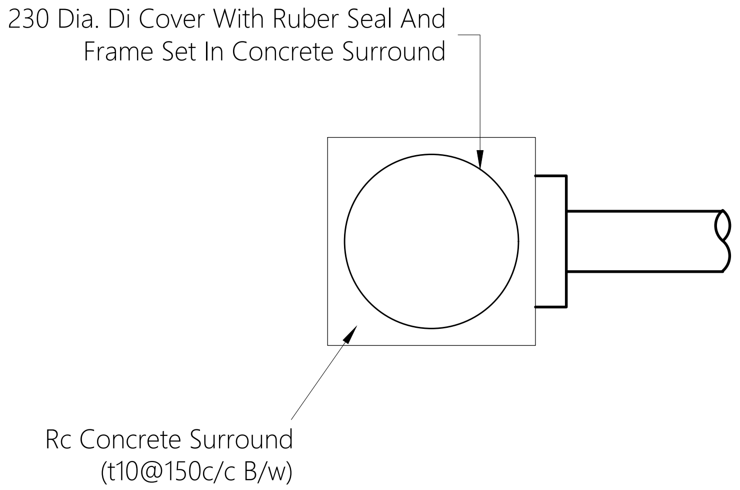
230 Dia. Di Cover With Ruber Seal And Frame Set In Concrete Surround
Rc Concrete Surround (t10@150c/c B/w)

PLAN VIEW - CLEANOUT (CO)

CLEAN OUT DETAILS
NTS

Legend

Note:

| REV. NO. | Date | Revision Description | Drawn | Chkd | Appd. |
|---|---|---|---|---|---|

Title:
**Consultancy Services for Survey, Design and EIA works of Water Supply and Sewerage Facilities in 7 islands, Maldives - Pakage 6**

Sub Title:
**Water Supply System in L. Kunahandhoo**

Client:
**Ministry of National Planning, Housing and Infrastructure, Republic of Maldives**

EPOCH ASSOCIATES
**T**: +960 333 3528
**E**: info@epoch.associates
**W**: wwww.epoch.associates
**A**: G. Rosary West,
Husnuheenaa Magu, Male', Maldives

FEEDBACK INFRA
Making Infrastructure Happen

Drawn: F.I.A.
Checked: M.S.S.
Designed: F.I.A.
Approved: I.W.
Date: Aug 2020
SCALE (A3): NTS
Project No: 01010101
Rev:
Page: W-(17)

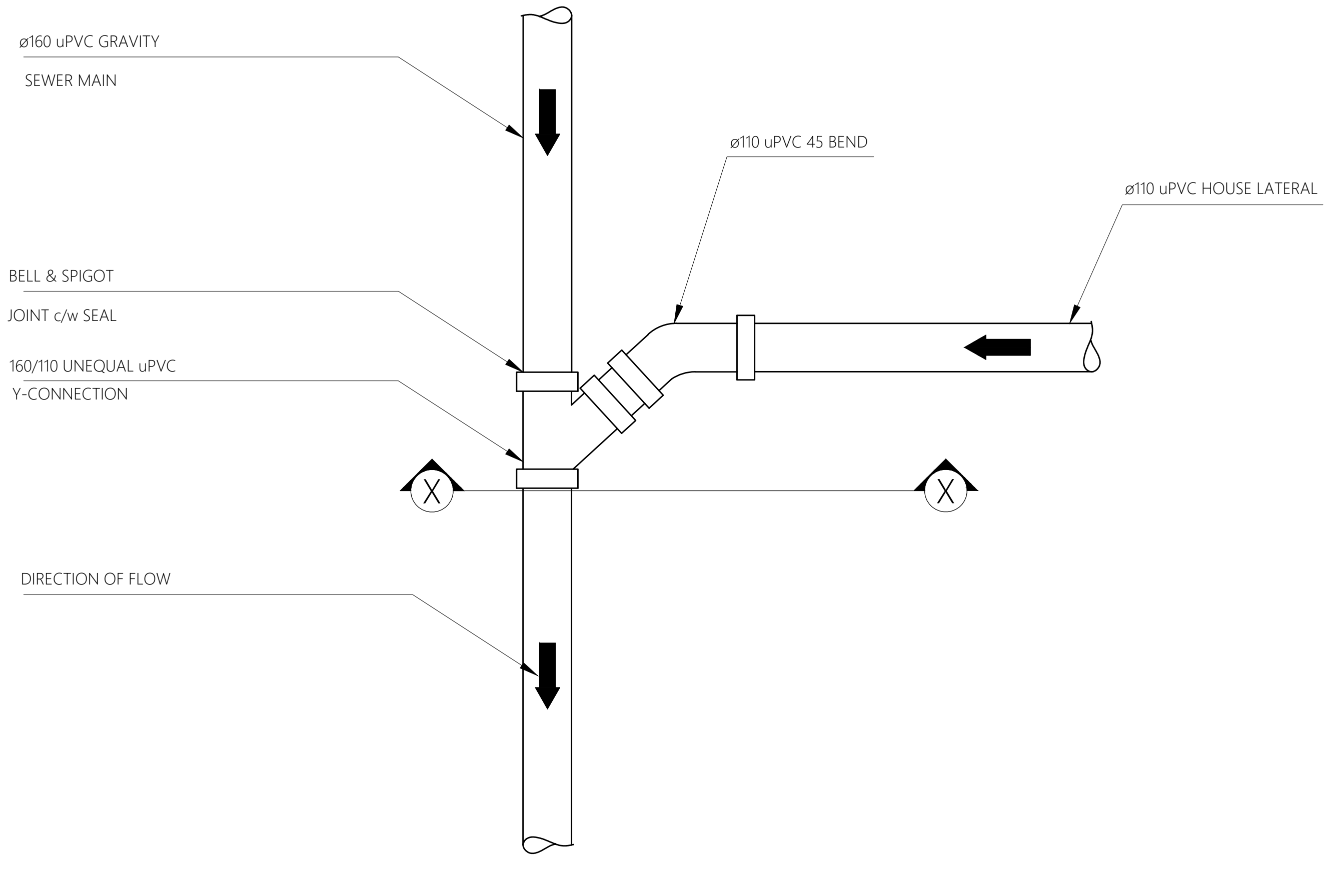
ø160 uPVC GRAVITY
SEWER MAIN
ø110 uPVC 45 BEND
ø110 uPVC HOUSE LATERAL
BELL & SPIGOT
JOINT c/w SEAL
160/110 UNEQUAL uPVC
Y-CONNECTION
X
X
DIRECTION OF FLOW

PLAN

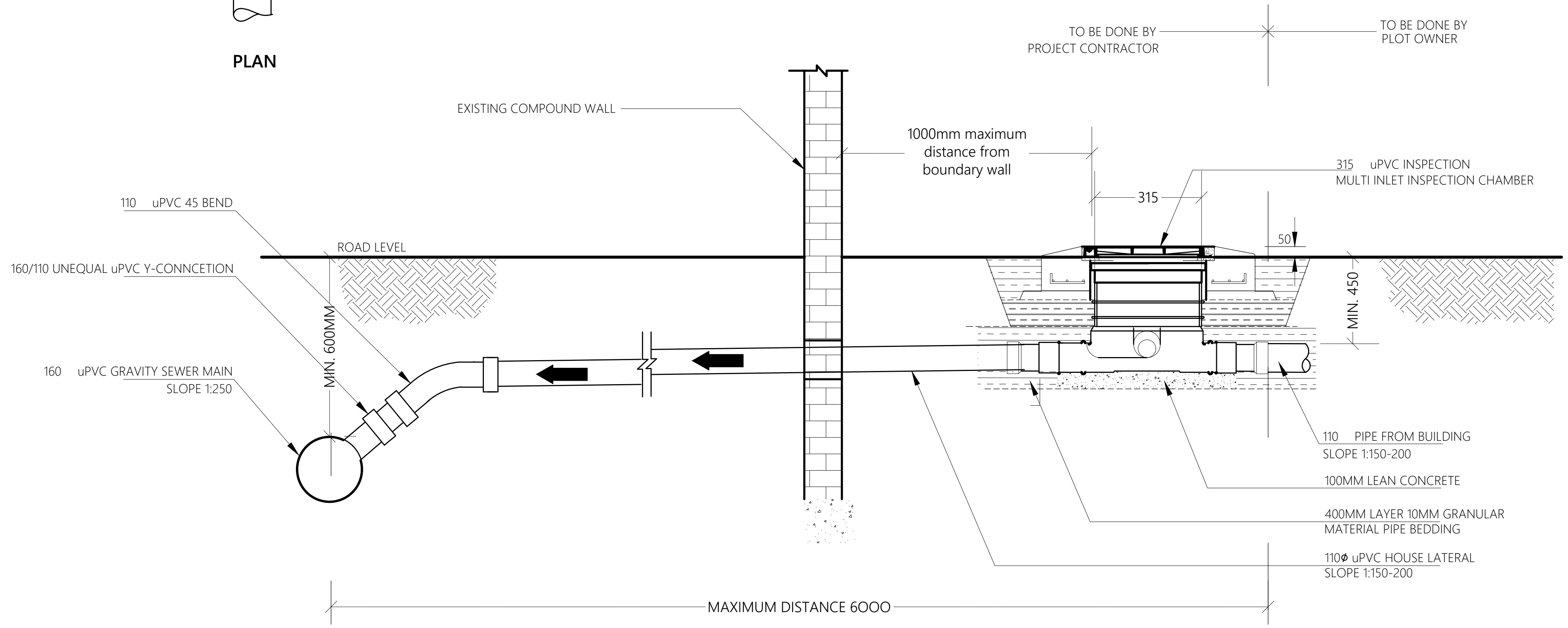
TO BE DONE BY
PROJECT CONTRACTOR
TO BE DONE BY
PLOT OWNER
EXISTING COMPOUND WALL
1000mm maximum
distance from
boundary wall
315 uPVC INSPECTION
MULTI INLET INSPECTION CHAMBER
315
110 uPVC 45 BEND
ROAD LEVEL
50
160/110 UNEQUAL uPVC Y-CONNCETION
MIN. 600MM
MIN. 450
160 uPVC GRAVITY SEWER MAIN
SLOPE 1:250
110 PIPE FROM BUILDING
SLOPE 1:150-200
100MM LEAN CONCRETE
400MM LAYER 10MM GRANULAR
MATERIAL PIPE BEDDING
110ø uPVC HOUSE LATERAL
SLOPE 1:150-200
MAXIMUM DISTANCE 6000

SECTION

## TYPICAL HOUSE CONNECTION DETAIL

NTS

Legend

Note:

| REV. NO. | Date | Revision Description | Drawn | Chkd | Appd. |
|---|---|---|---|---|---|

Title:
**Consultancy Services for Survey, Design and EIA works of Water Supply and Sewerage Facilities in 7 islands, Maldives - Pakage 6**

Sub Title:
Water Supply System in L. Kunahandhoo

Client:
Ministry of National Planning, Housing and Infrastructure, Republic of Maldives

EPOCH ASSOCIATES
T: +960 333 3528
E: info@epoch.associates
W: wwww.epoch.associates
A: G. Rosary West,
Husnuheenaa Magu, Male', Maldives

FEEDBACK INFRA
Making Infrastructure Happen

Drawn: F.I.A.
Checked: M.S.S.
Designed: F.I.A.
Approved: I.W.
Date: Aug 2020
SCALE (A3): NTS
Project No: 01010101
Rev:
Page: W-(18)

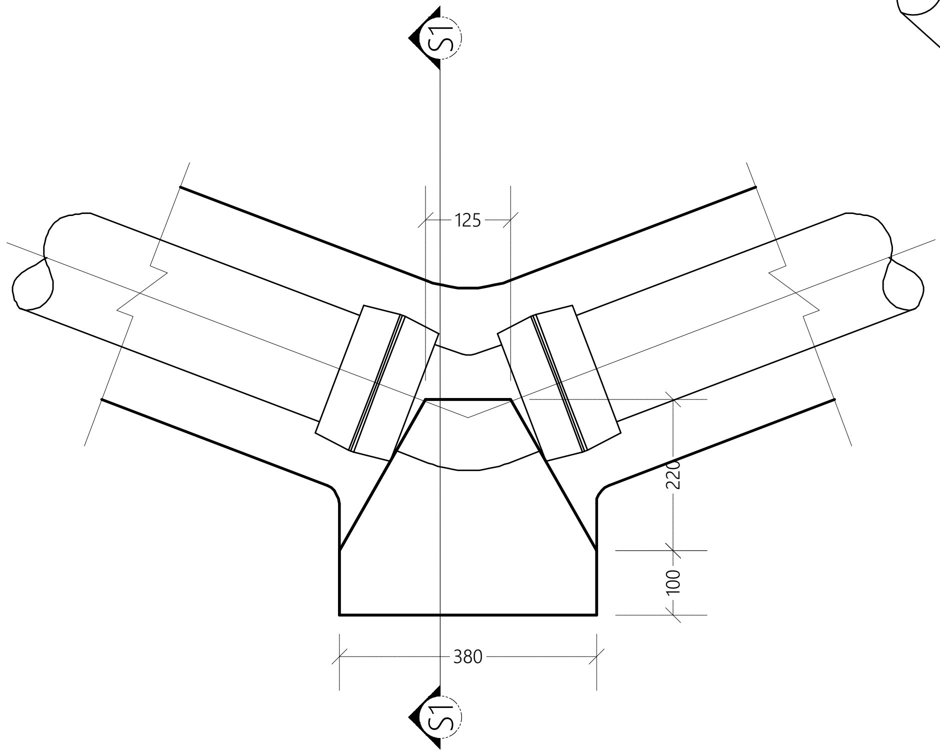
S1
125
220
100
380
S1

**HORIZONTAL 45° BEND**

NTS

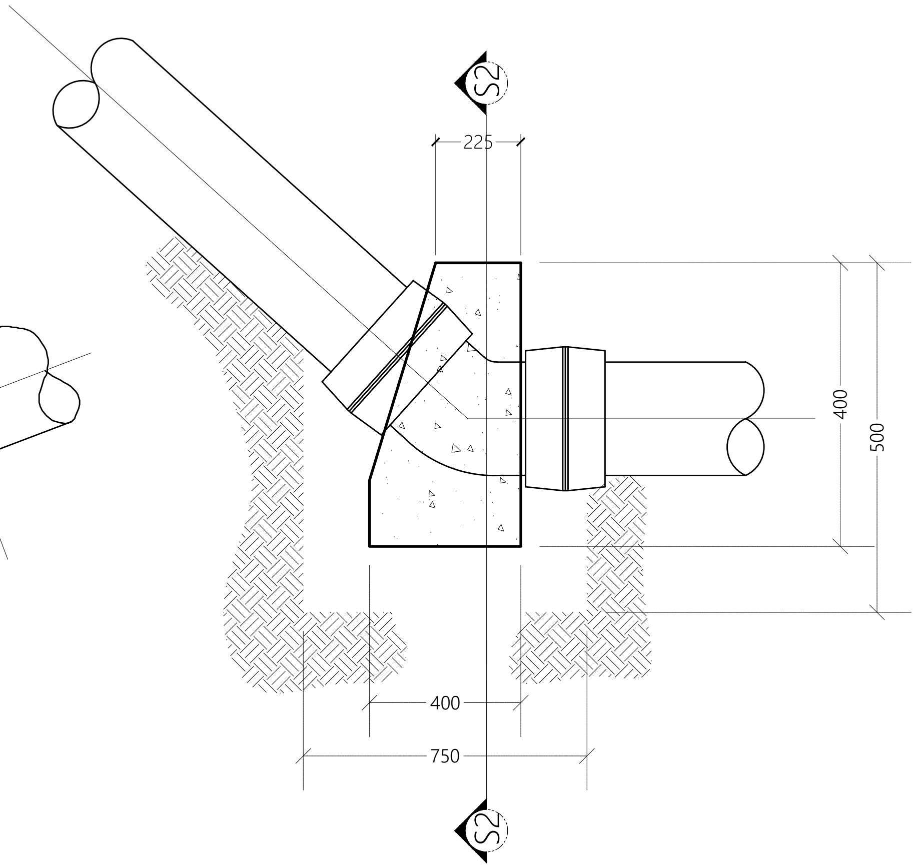
S2
225
400
500
400
750
S2

**VERTICAL 45° BEND**

NTS

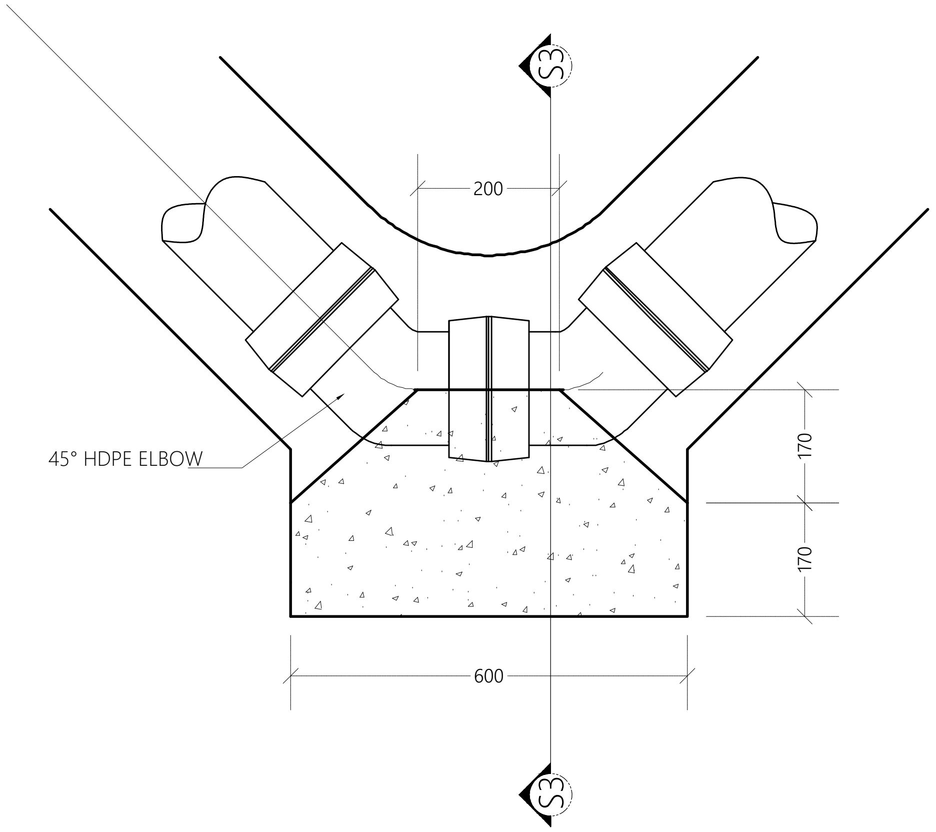
S3
200
45° HDPE ELBOW
170
170
600
S3

**HORIZONTAL 90° BEND**

NTS

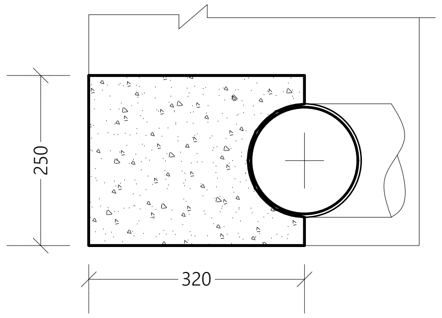

**SECTION S1-S1**

NTS

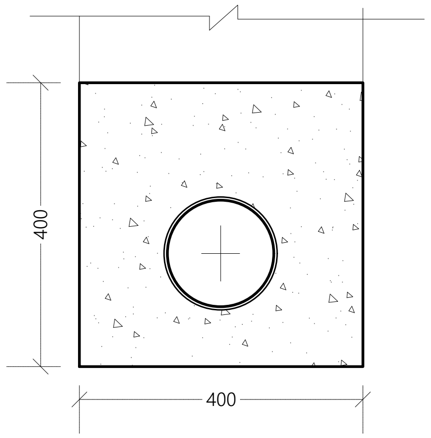

**SECTION S2-S2**

NTS

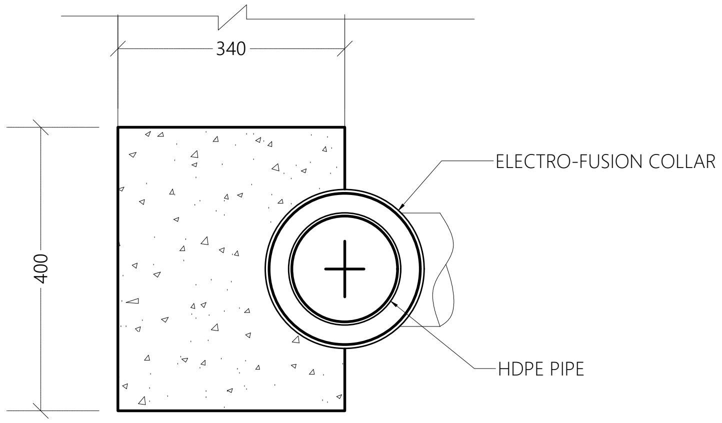
340
400
ELECTRO-FUSION COLLAR
HDPE PIPE

SECTION S3-S3

NTS

**THRUST BLOCK DETAILS**

NTS

Legend

Note:

| REV. NO. | Date | Revision Description | Drawn | Chkd | Appd. |
|---|---|---|---|---|---|
| | | | | | |
| | | | | | |
| | | | | | |
| | | | | | |
| | | | | | |
| | | | | | |

Title:
Consultancy Services for Survey, Design and EIA works of Water Supply and Sewerage Facilities in 7 islands, Maldives - Pakage 6

Sub Title:
Water Supply System in L. Kunahandhoo

Client:
Ministry of National Planning, Housing and Infrastructure, Republic of Maldives

EPOCH ASSOCIATES
T: +960 333 3528
E: info@epoch.associates
W: wwww.epoch.associates
A: G. Rosary West,
Husnuheenaa Magu, Male', Maldives

Drawn: F.I.A.
Checked: M.S.S.
Designed: F.I.A.
Approved: I.W.
Date: Aug 2020
SCALE (A3): NTS
Project No: 01010101
Rev:
Page: W-(19)

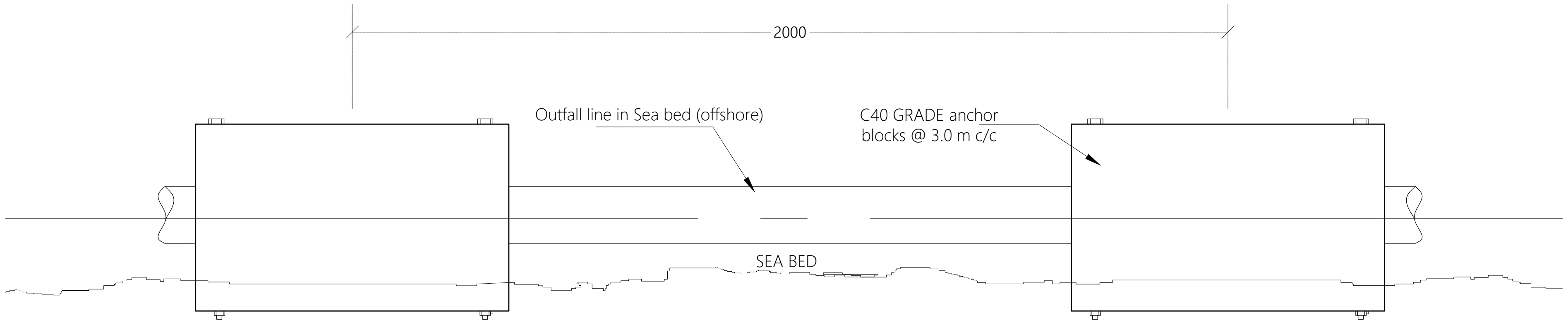
2000
Outfall line in Sea bed (offshore)
C40 GRADE anchor blocks @ 3.0 m c/c
SEA BED

BALLAST BLOCK SIDE ELEVATION

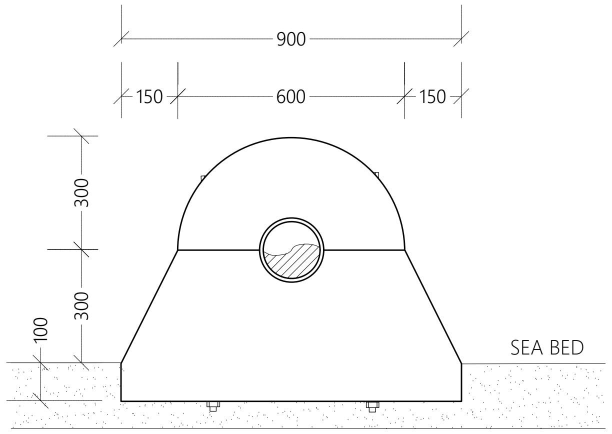
900
150
600
150
300
300
100
SEA BED

BALLAST BLOCK FRONT ELEVATION

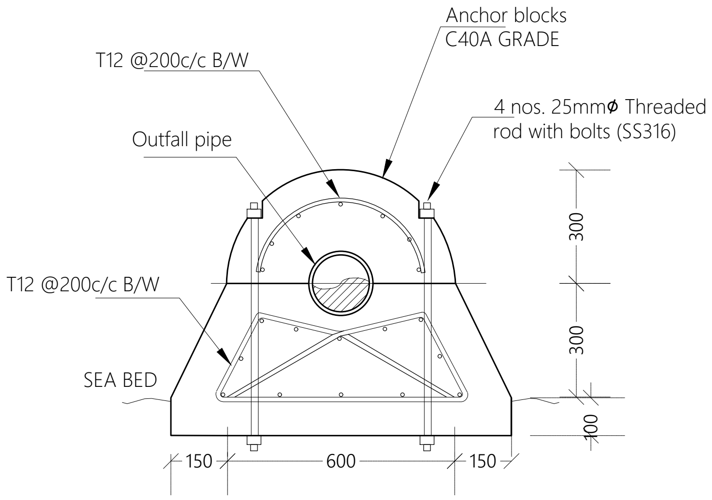
Anchor blocks C40A GRADE
T12 @200c/c B/W
4 nos. 25mmϕ Threaded rod with bolts (SS316)
Outfall pipe
T12 @200c/c B/W
SEA BED
300
300
100
150
600
150

BALLAST BLOCK SECTION

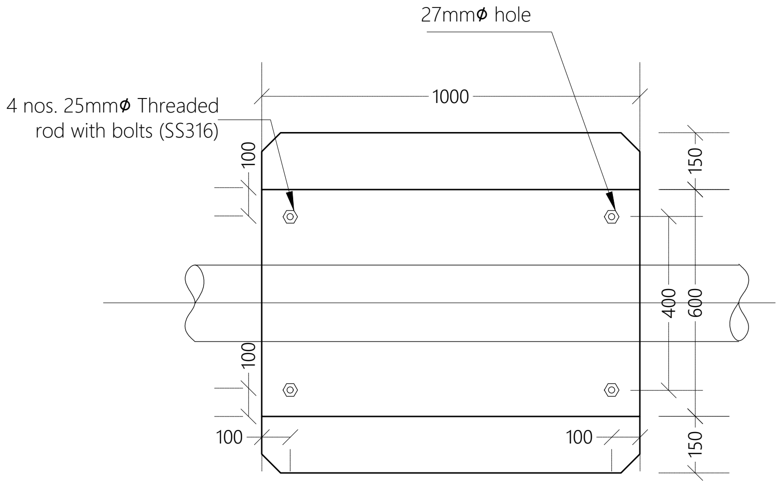
27mmϕ hole
1000
4 nos. 25mmϕ Threaded rod with bolts (SS316)
100
100
150
400
600
150
100
100

BALLAST BLOCK PLAN

Legend

Note:

1. All backing rings for stub flanges , nuts and bolts shall be grade 316 stainless steel.
2. All pipe work shall be bedded on 10mm thick neoprene rubber seat in semicircular recess matching the O.D. the pipe.
3. Fabricate specific pipe clamps to provide firm clamping action according to pipe O.D.
4. All structural concrete shall be of grade C40A.
5. All castings shall be done using sulphate resistant portland cement to BS 4027:1996.
6. All structural reinforcement shall be epoxy coating of non-pre-stressed reinforcement to ASTM-A775/A775M.
7. A cover of 75mm should be given for all reinforcements.

| REV. NO. | Date | Revision Description | Drawn | Chkd | Appd. |
|---|---|---|---|---|---|
| | | | | | |

Title:
**Consultancy Services for Survey, Design and EIA works of Water Supply and Sewerage Facilities in 7 islands, Maldives - Pakage 6**

Sub Title:
**Water Supply System in L. Kunahandhoo**

Client:
**Ministry of National Planning, Housing and Infrastructure, Republic of Maldives**

EPOCH ASSOCIATES
T: +960 333 3528
E: info@epoch.associates
W: wwww.epoch.associates
A: G. Rosary West,
Husnuheenaa Magu, Male', Maldives

FEEDBACK INFRA
Making Infrastructure Happen

Drawn: F.I.A.
Checked: M.S.S.
Designed: F.I.A.
Approved: I.W.
Date: Aug 2020
SCALE (A3): NTS
Project No: 01010101
Rev:
Page: W-(20)

## BALLAST BLOCK DETAILS

NTS

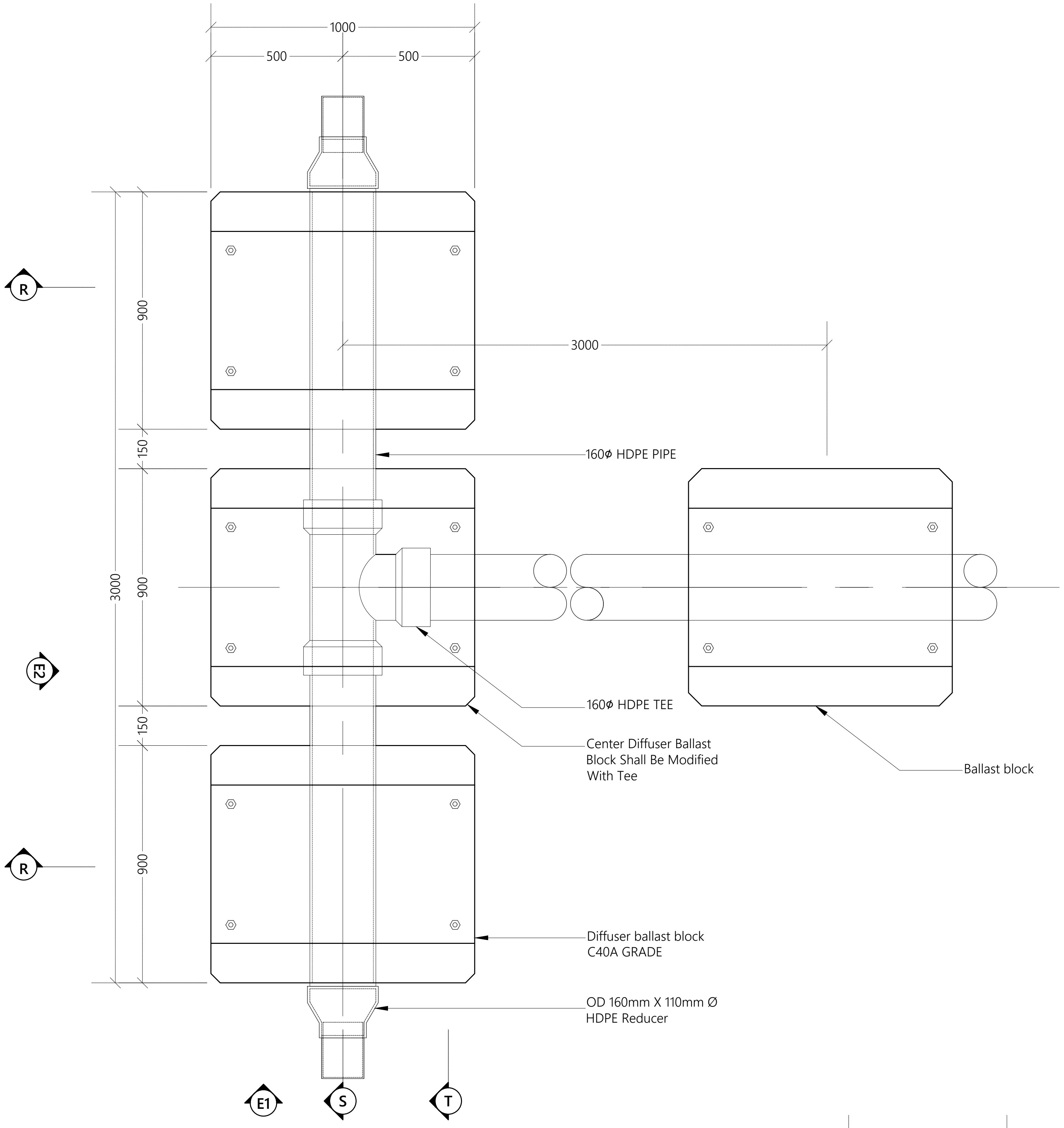
1000
500
500
3000
900
150
900
150
900
3000
R
E2
R
160ϕ HDPE PIPE
160ϕ HDPE TEE
Center Diffuser Ballast Block Shall Be Modified With Tee
Ballast block
Diffuser ballast block C40A GRADE
OD 160mm X 110mm Ø HDPE Reducer
E1
S
T

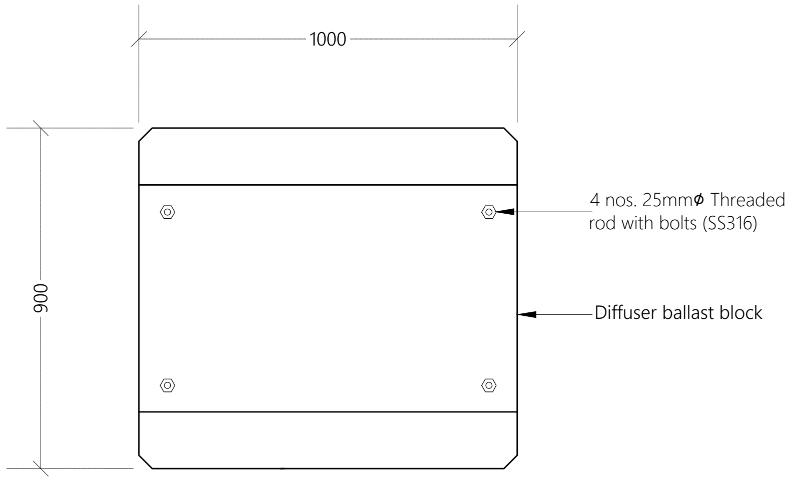
1000
900
4 nos. 25mmϕ Threaded rod with bolts (SS316)
Diffuser ballast block

DIFFUSER BALLAST BLOCK PLAN

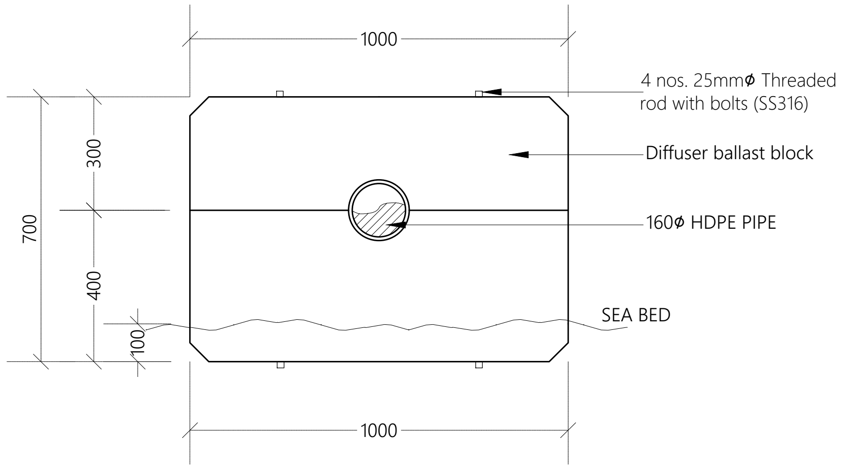
1000
4 nos. 25mmϕ Threaded rod with bolts (SS316)
Diffuser ballast block
160ϕ HDPE PIPE
SEA BED
700
300
400
100
1000

DIFFUSER BALLAST BLOCK FRONT ELEVATION - E1

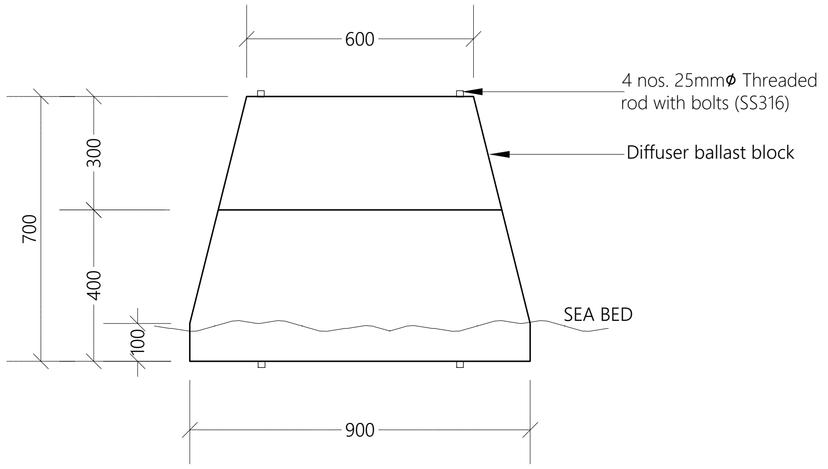
600
4 nos. 25mmϕ Threaded rod with bolts (SS316)
Diffuser ballast block
700
300
400
100
SEA BED
900

DIFFUSER BALLAST BLOCK FRONT ELEVATION - E2

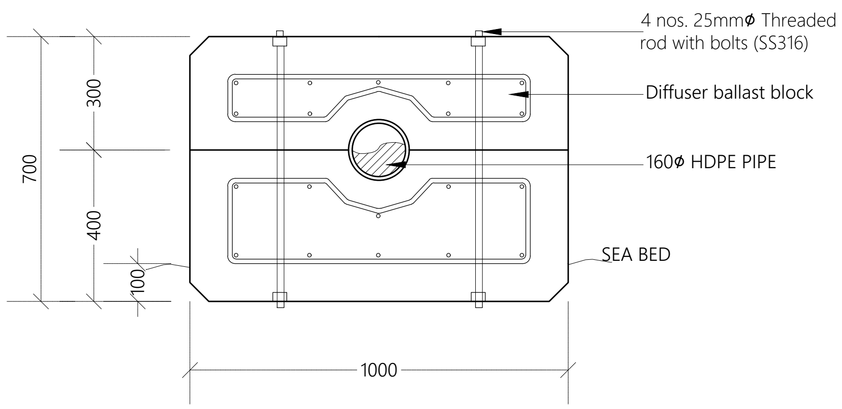
4 nos. 25mmϕ Threaded rod with bolts (SS316)
Diffuser ballast block
160ϕ HDPE PIPE
SEA BED
700
300
400
100
1000

DIFFUSER BALLAST BLOCK SECTION - R

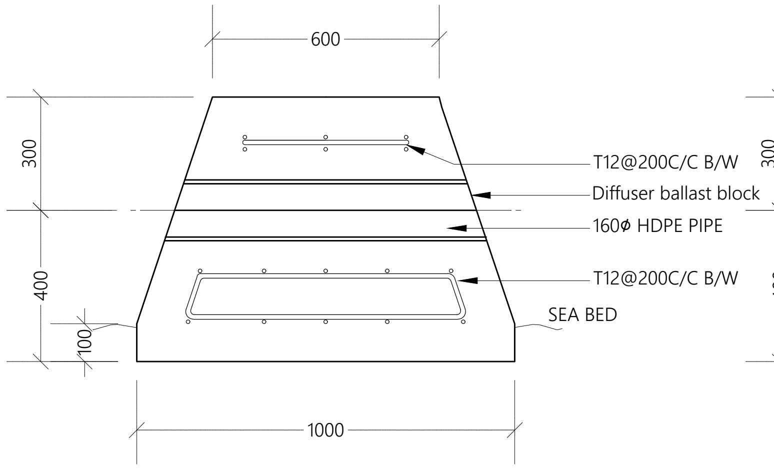
600
300
400
100
T12@200C/C B/W
Diffuser ballast block
160ϕ HDPE PIPE
T12@200C/C B/W
SEA BED
1000

DIFFUSER BALLAST BLOCK SECTION - S

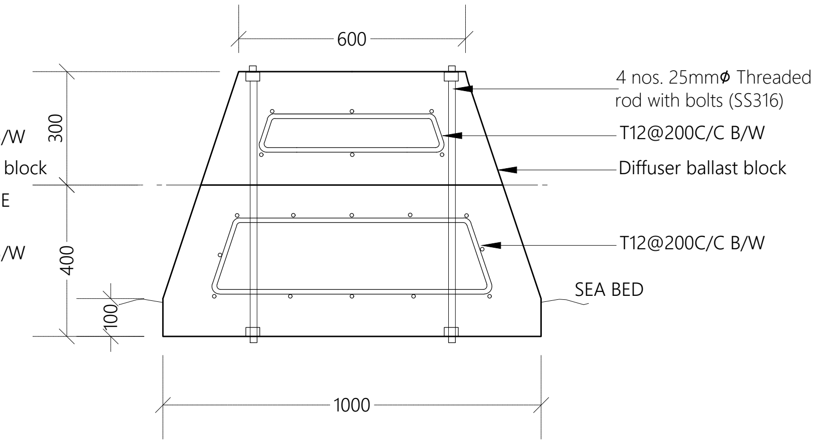
600
4 nos. 25mmϕ Threaded rod with bolts (SS316)
T12@200C/C B/W
Diffuser ballast block
T12@200C/C B/W
SEA BED
300
400
100
1000

DIFFUSER BALLAST BLOCK SECTION - T

DIFFUSER DETAILS

NTS

Legend

Note:

1. All backing rings for stub flanges , nuts and bolts shall be grade 316 stainless steel.
2. All pipe work shall be bedded on 10mm thick neoprene rubber seat in semicircular recess matching the O.D. the pipe.
3. Fabricate specific pipe clamps to provide firm clamping action according to pipe O.D.
4. All structural concrete shall be of grade C40A.
5. All castings shall be done using sulphate resistant portland cement to BS 4027:1996.
6. All structural reinforcement shall be epoxy coating of non-pre-stressed reinforcement to ASTM-A775/A775M.
7. A cover of 75mm should be given for all reinforcements.

| | | | | | |
|---|---|---|---|---|---|
| | | | | | |
| | | | | | |
| | | | | | |
| | | | | | |
| | | | | | |
| | | | | | |
| REV. NO. | Date | Revision Description | Drawn | Chkd | Appd. |

Title:
**Consultancy Services for Survey, Design and EIA works of Water Supply and Sewerage Facilities in 7 islands, Maldives - Pakage 6**

Sub Title:
**Water Supply System in L. Kunahandhoo**

Client:
**Ministry of National Planning, Housing and Infrastructure, Republic of Maldives**

EPOCH ASSOCIATES
**T**: +960 333 3528
**E**: info@epoch.associates
**W**: wwww.epoch.associates
**A**: G. Rosary West,
Husnuheenaa Magu, Male', Maldives

FEEDBACK INFRA
Making Infrastructure Happen

| | |
|---|---|
| Drawn: F.I.A. | Checked: M.S.S. |
| Designed: F.I.A. | Approved: I.W. |
| Date: Aug 2020 | SCALE (A3): NTS |
| Project No: 01010101 | |
| Rev: | Page: W-(21) |

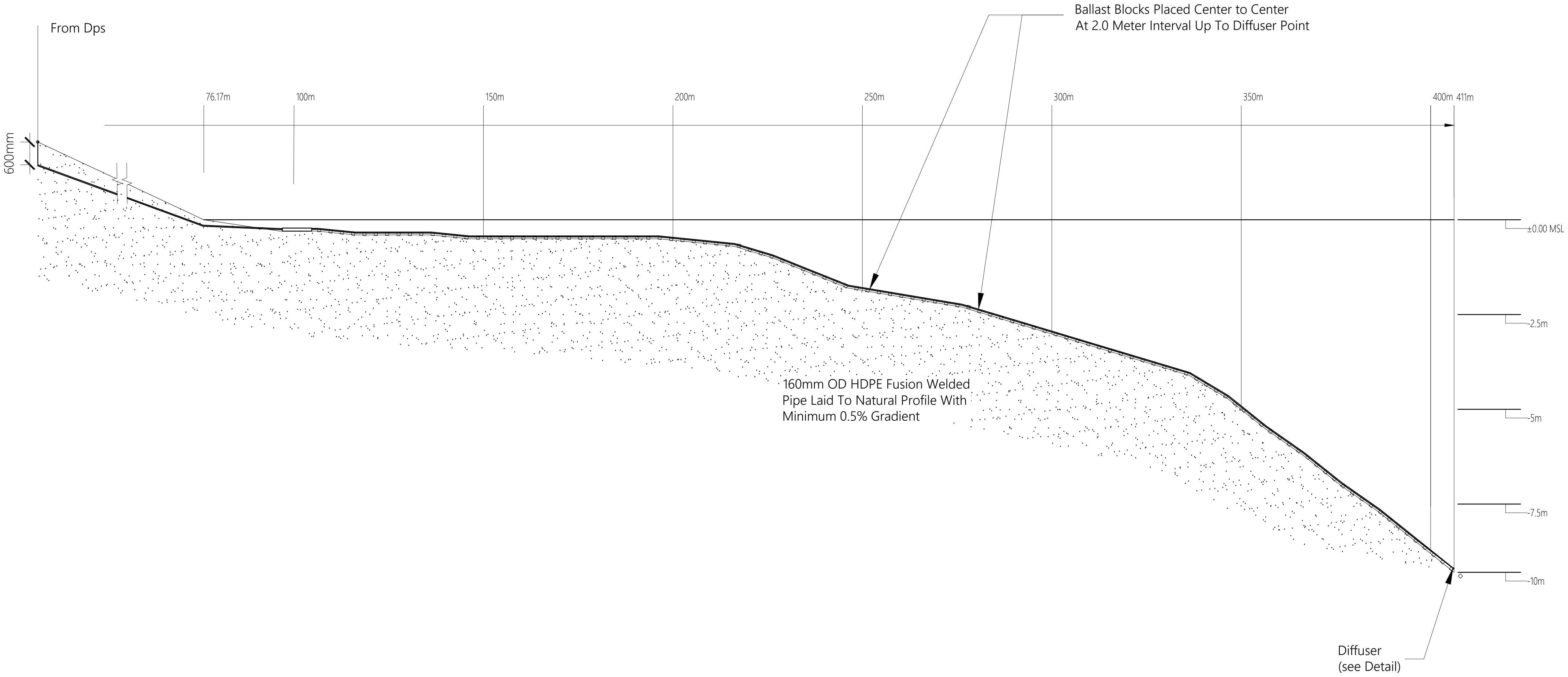
Ballast Blocks Placed Center to Center
At 2.0 Meter Interval Up To Diffuser Point
From Dps
600mm
76.17m
100m
150m
200m
250m
300m
350m
400m
411m
±0.00 MSL
-2.5m
-5m
-7.5m
-10m
160mm OD HDPE Fusion Welded
Pipe Laid To Natural Profile With
Minimum 0.5% Gradient
Diffuser
(see Detail)

## SEA OUTLET DETAILS

NTS

Legend

Note:

**Notes:**

- Contractor should carry out a detailed bathymetric survey for the proposed area, revise and present a shop drawing for the outfall layout prior to commencement of outfall works.
- The ballast block spacing is 2.0m. All distances are from c/c of blocks.

| REV. NO. | Date | Revision Description | Drawn | Chkd | Appd. |
|---|---|---|---|---|---|
| | | | | | |
| | | | | | |
| | | | | | |
| | | | | | |
| | | | | | |
| | | | | | |

Title:

**Consultancy Services for Survey, Design and EIA works of Water Supply and Sewerage Facilities in 7 islands, Maldives - Pakage 6**

Sub Title:

**Water Supply System in L. Kunahandhoo**

Client:

**Ministry of National Planning, Housing and Infrastructure, Republic of Maldives**

EPOCH ASSOCIATES

**T**: +960 333 3528
**E**: info@epoch.associates
**W**: wwww.epoch.associates
**A**: G. Rosary West,
Husnuheenaa Magu, Male', Maldives

FEEDBACK INFRA
Making Infrastructure Happen

Drawn: F.I.A.
Checked: M.S.S.
Designed: F.I.A.
Approved: I.W.
Date: Aug 2020
SCALE (A3): NTS
Project No: 01010101
Rev:
Page: W-(22)

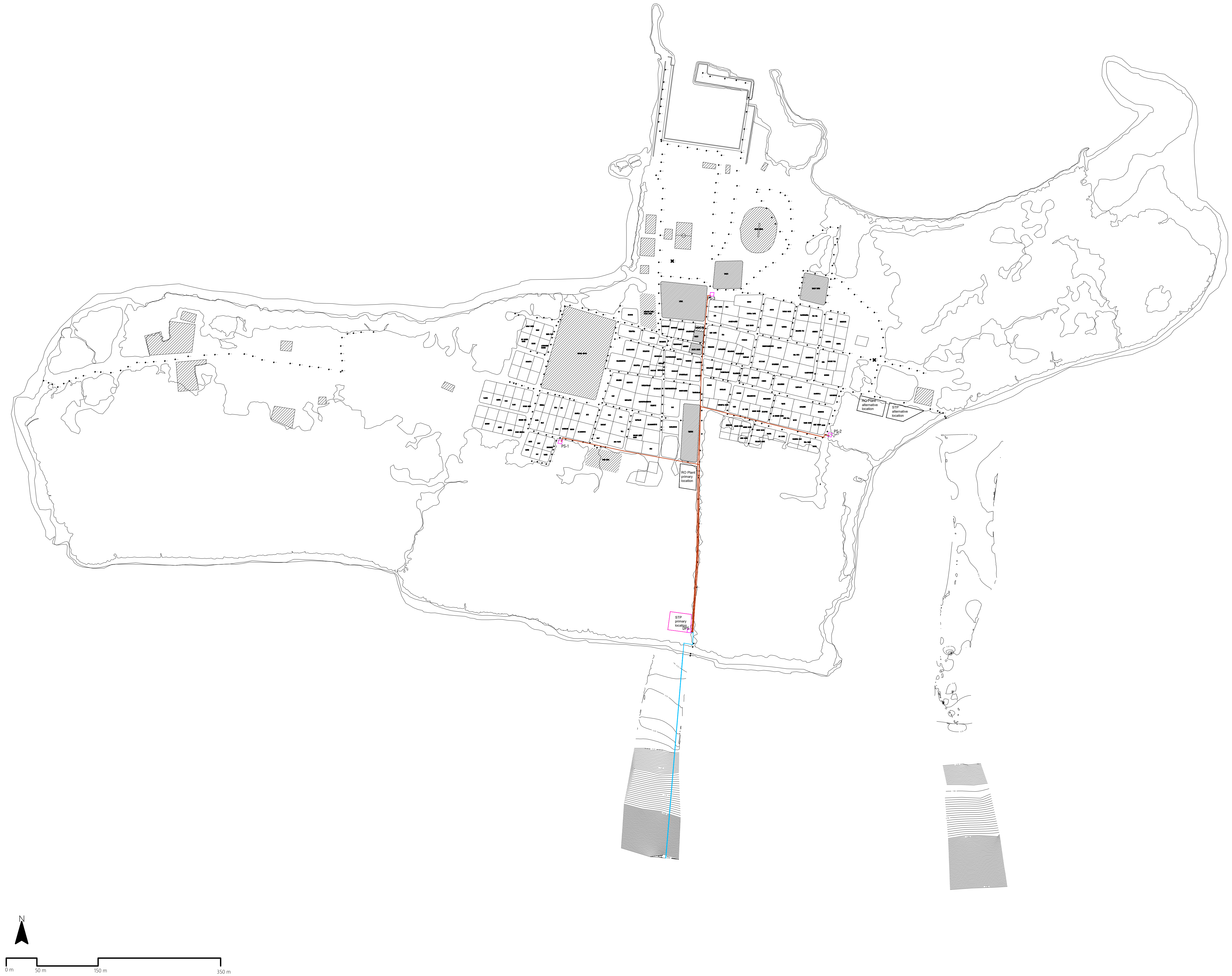
PS-1
PS-2
PS-3
DPS
RO Plant primary location
RO Plant alternative location
STP alternative location
STP primary location
N
0 m
50 m
150 m
350 m

L. KUNAHANDHOO SEWERAGE SYSTEM - PRESSURE  NETWORK LAYOUT

1:6000

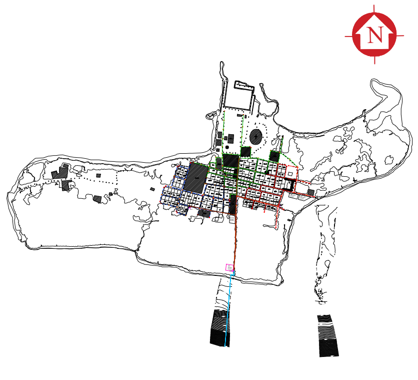

Legend

| | |
|---|---|
| 🟥 | 110 mm Ø HDPE Pumping Main (PE100, PN16, SDR11) |
| 🟦 | 160 mm Ø HDPE Sea Outfall Pipe (PE100, PN16, SDR11) |

Note:

| | | | | | |
|---|---|---|---|---|---|
| | | | | | |
| | | | | | |
| | | | | | |
| | | | | | |
| | | | | | |
| | | | | | |
| REV. NO. | Date | Revision Description | Drawn | Chkd | Appd. |

Title:

**Consultancy Services for Survey, Design and EIA works of Water Supply and Sewerage Facilities in 7 islands, Maldives - Pakage 6**

Sub Title:

**Water Supply System in L. Kunahandhoo**

Client:

**Ministry of National Planning, Housing and Infrastructure, Republic of Maldives**

EPOCH ASSOCIATES

**T**: +960 333 3528
**E**: info@epoch.associates
**W**: wwww.epoch.associates
**A**: G. Rosary West,
Husnuheenaa Magu, Male', Maldives

FEEDBACK INFRA
Making Infrastructure Happen

| | | | |
|---|---|---|---|
| Drawn: | F.I.A. | Checked: | M.S.S. |
| Designed: | F.I.A. | Approved: | I.W. |
| Date: | Aug 2020 | SCALE (A3): | 1:6000 |
| Project No: | 01010101 | | |
| Rev: | | Page: | W-(23) |

# Profile 01

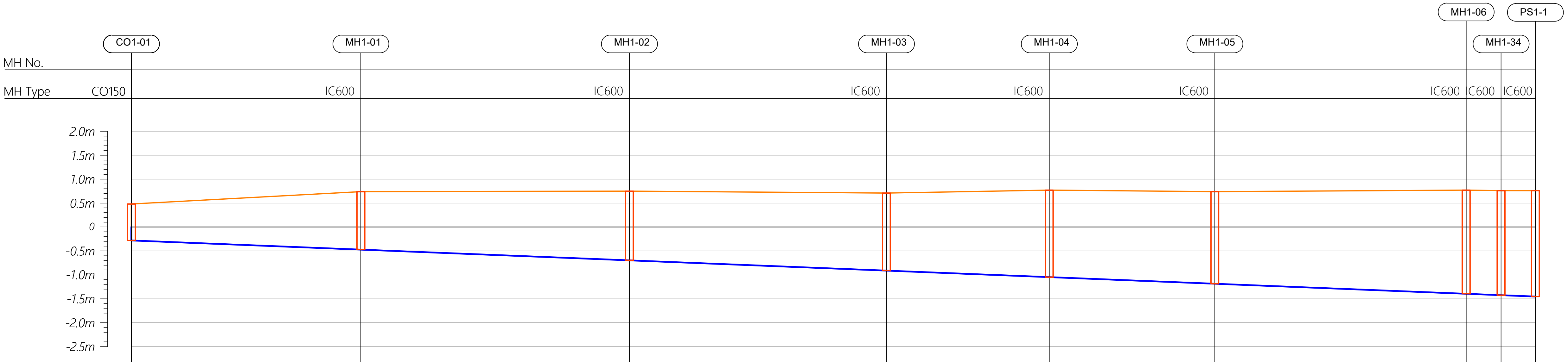

| MH No. | CO1-01 | MH1-01 | MH1-02 | MH1-03 | MH1-04 | MH1-05 | MH1-06 | MH1-34 | PS1-1 |
|---|---|---|---|---|---|---|---|---|---|
| MH Type | CO150 | IC600 | IC600 | IC600 | IC600 | IC600 | IC600 | IC600 | IC600 |
| Pipe Diameter (mm) | | Ø160 | Ø160 | Ø160 | Ø160 | Ø160 | | Ø160 | |
| Slope | | 1:250 | 1:250 | 1:250 | 1:250 | 1:250 | 1:250 | 1:250 | 1:250 |
| Ground level (msl) | 0.480 | 0.740 | 0.750 | 0.710 | 0.770 | 0.740 | 0.770 | 0.760 | 0.760 |
| Pipe Invert Level (msl) | -0.280 | -0.472 | -0.696 | -0.911 | -1.047 | -1.185 | -1.395 | -1.424 | -1.453 |
| Depth of Manhole (m) | 0.760 | 1.212 | 1.446 | 1.621 | 1.817 | 1.925 | 2.165 | 2.184 | 2.213 |
| Distance (m) | 0.00 | 47.92 | 56.08 | 53.67 | 34.00 | 34.57 | 52.48 | 7.29 | 7.17 |

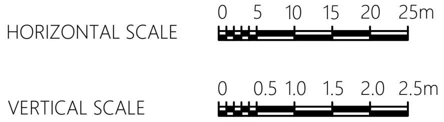

CO160 — Cleanout ø160
IC600 — HDPE Manhole ø600
PS — Pump Station

| | | | | | |
|---|---|---|---|---|---|
| | | | | | |
| | | | | | |
| | | | | | |
| | | | | | |
| | | | | | |
| R00 | JUNE 2020 | STAGE -1 | PD | SBC | SD |
| REV. NO. | Date | Revision Description | Drawn | Chkd | Appd. |

Title:
*Consultancy Services for Survey, Design and EIA works of Water Supply and Sewerage Facilities in 5 islands, Maldives - Package 6*

Sub Title:
*Sewerage System in L.Kunahandhoo*

Client:
*Ministry of National Planning, Housing and Infrastructure, Republic of Maldives*

EPOCH ASSOCIATES
**T**: +960 333 3528
**E**: info@epoch.associates
**W**: wwww.epoch.associates
**A**: G. Rosary West,
Husnuheenaa Magu, Male', Maldives

FEEDBACK INFRA
Making Infrastructure Happen

Drawn: A.R.W
Checked: M.S.S
Designed: F.I.A
Approved: I.W
Date: Aug 2020
SCALE (A3): 1:100
Project No: 01010101
Rev: *R-01*
Page: ***PS1-01***

## Profile 02

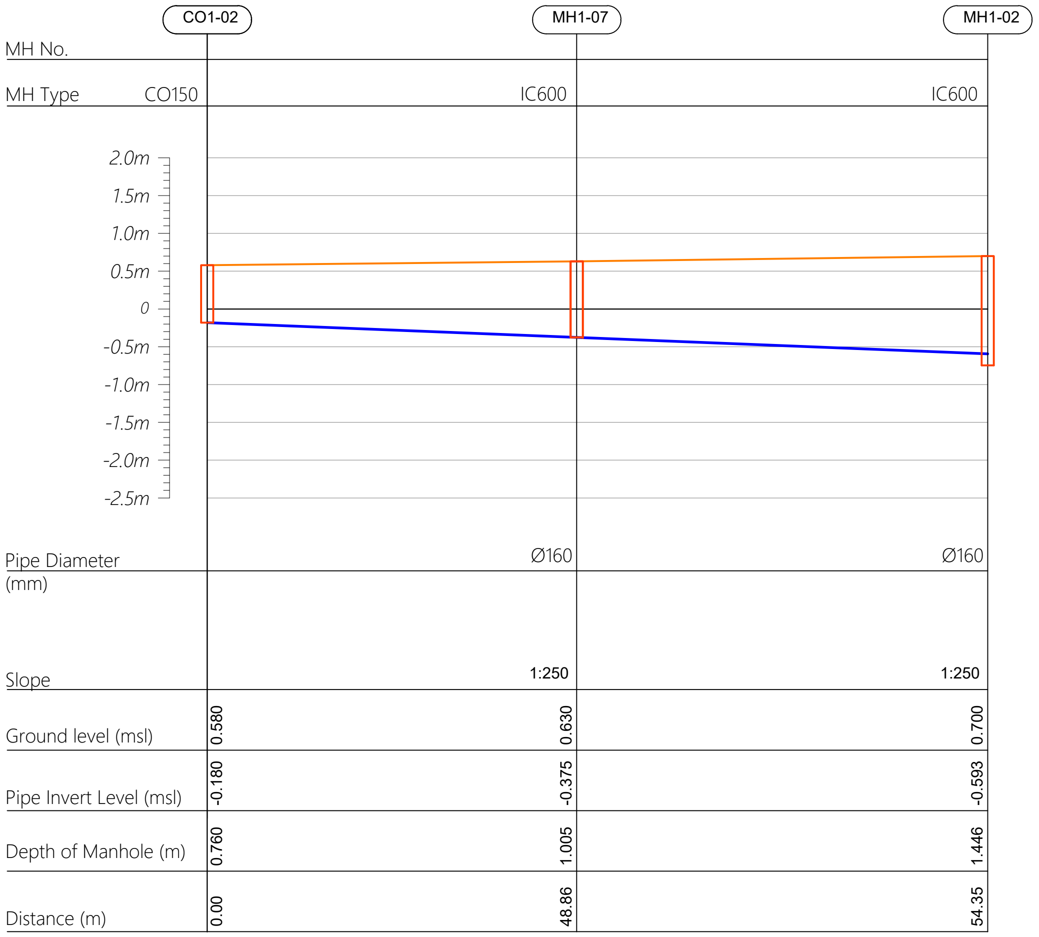

| MH No. | CO1-02 | MH1-07 | MH1-02 |
|---|---|---|---|
| MH Type | CO150 | IC600 | IC600 |
| Pipe Diameter (mm) | | Ø160 | Ø160 |
| Slope | | 1:250 | 1:250 |
| Ground level (msl) | 0.580 | 0.630 | 0.700 |
| Pipe Invert Level (msl) | -0.180 | -0.375 | -0.593 |
| Depth of Manhole (m) | 0.760 | 1.005 | 1.446 |
| Distance (m) | 0.00 | 48.86 | 54.35 |

## Profile 03

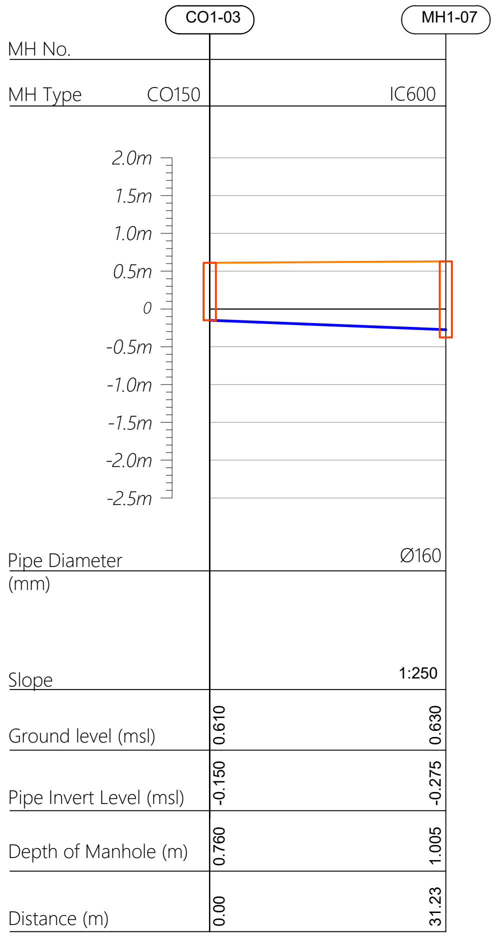

| MH No. | CO1-03 | MH1-07 |
|---|---|---|
| MH Type | CO150 | IC600 |
| Pipe Diameter (mm) | | Ø160 |
| Slope | | 1:250 |
| Ground level (msl) | 0.610 | 0.630 |
| Pipe Invert Level (msl) | -0.150 | -0.275 |
| Depth of Manhole (m) | 0.760 | 1.005 |
| Distance (m) | 0.00 | 31.23 |

## Profile 04

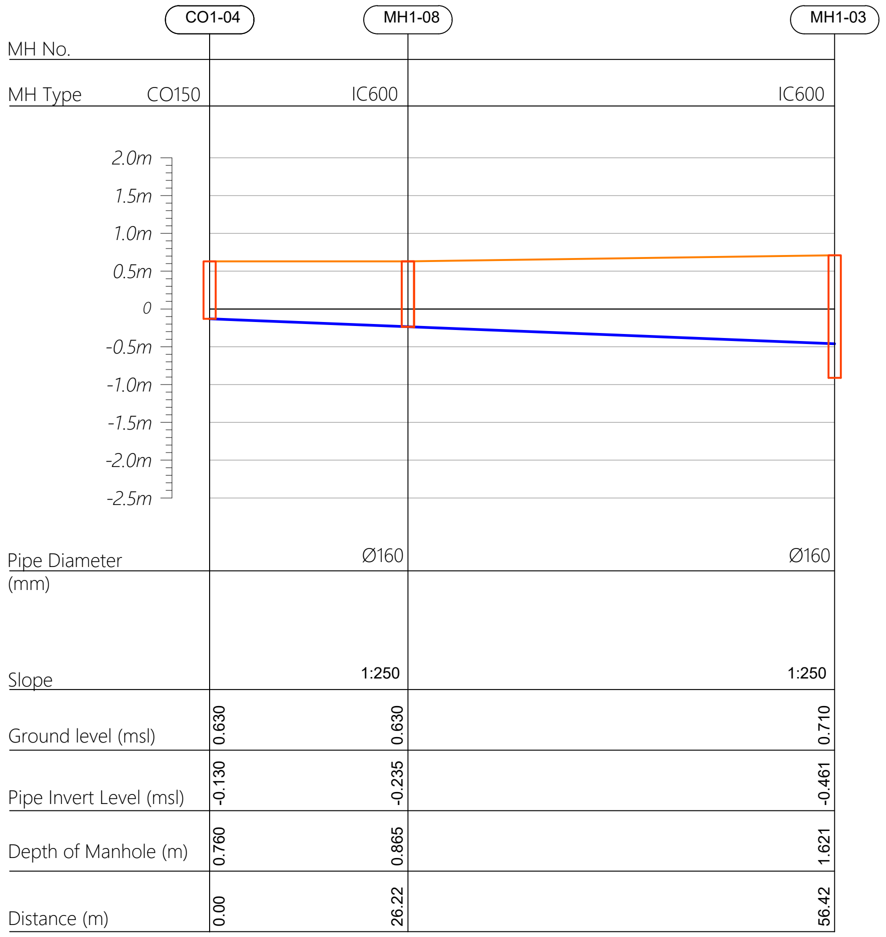

| MH No. | CO1-04 | MH1-08 | MH1-03 |
|---|---|---|---|
| MH Type | CO150 | IC600 | IC600 |
| Pipe Diameter (mm) | | Ø160 | Ø160 |
| Slope | | 1:250 | 1:250 |
| Ground level (msl) | 0.630 | 0.630 | 0.710 |
| Pipe Invert Level (msl) | -0.130 | -0.235 | -0.461 |
| Depth of Manhole (m) | 0.760 | 0.865 | 1.621 |
| Distance (m) | 0.00 | 26.22 | 56.42 |

HORIZONTAL SCALE 0 5 10 15 20 25m

VERTICAL SCALE 0 0.5 1.0 1.5 2.0 2.5m

CO160 — Cleanout ϕ160
IC600 — HDPE Manhole ϕ600
PS — Pump Station

| | | | | | |
|---|---|---|---|---|---|
| | | | | | |
| | | | | | |
| | | | | | |
| | | | | | |
| | | | | | |
| R00 | JUNE 2020 | STAGE -1 | PD | SBC | SD |
| REV. NO. | Date | Revision Description | Drawn | Chkd | Appd. |

Title:
*Consultancy Services for Survey, Design and EIA works of Water Supply and Sewerage Facilities in 5 islands, Maldives - Package 6*

Sub Title:
*Sewerage System in L.Kunahandhoo*

Client:
*Ministry of National Planning, Housing and Infrastructure, Republic of Maldives*

EPOCH ASSOCIATES
T: +960 333 3528
E: info@epoch.associates
W: wwww.epoch.associates
A: G. Rosary West, Husnuheenaa Magu, Male', Maldives

FEEDBACK INFRA
Making Infrastructure Happen

Drawn: A.R.W
Checked: M.S.S
Designed: F.I.A
Approved: I.W
Date: Aug 2020
SCALE (A3): 1:100
Project No: 01010101
Rev: R-01
Page: **PS1-02**

## Profile 05

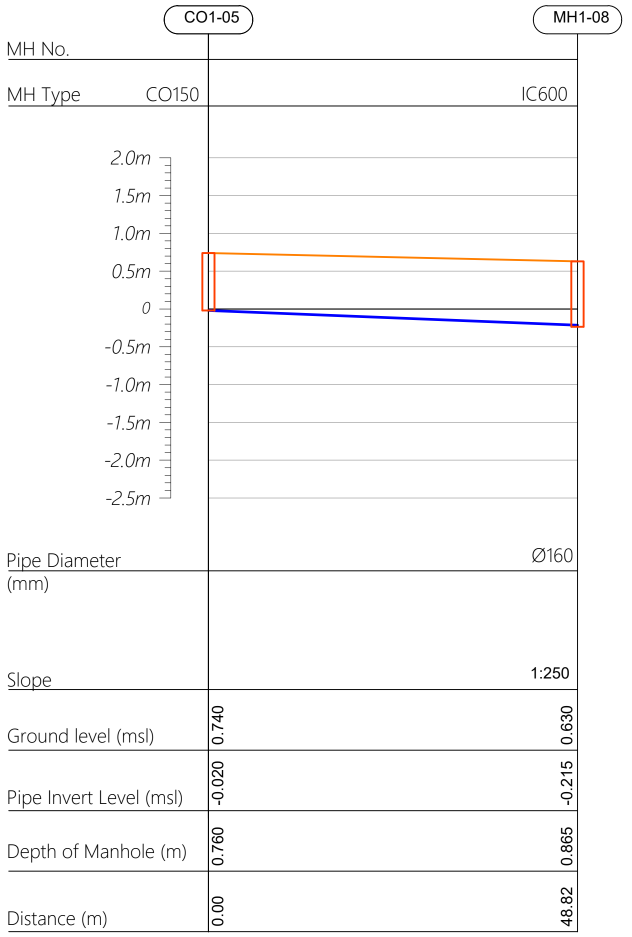

| | | |
|---|---|---|
| MH No. | CO1-05 | MH1-08 |
| MH Type | CO150 | IC600 |
| Pipe Diameter (mm) | | Ø160 |
| Slope | | 1:250 |
| Ground level (msl) | 0.740 | 0.630 |
| Pipe Invert Level (msl) | -0.020 | -0.215 |
| Depth of Manhole (m) | 0.760 | 0.865 |
| Distance (m) | 0.00 | 48.82 |

## Profile 06

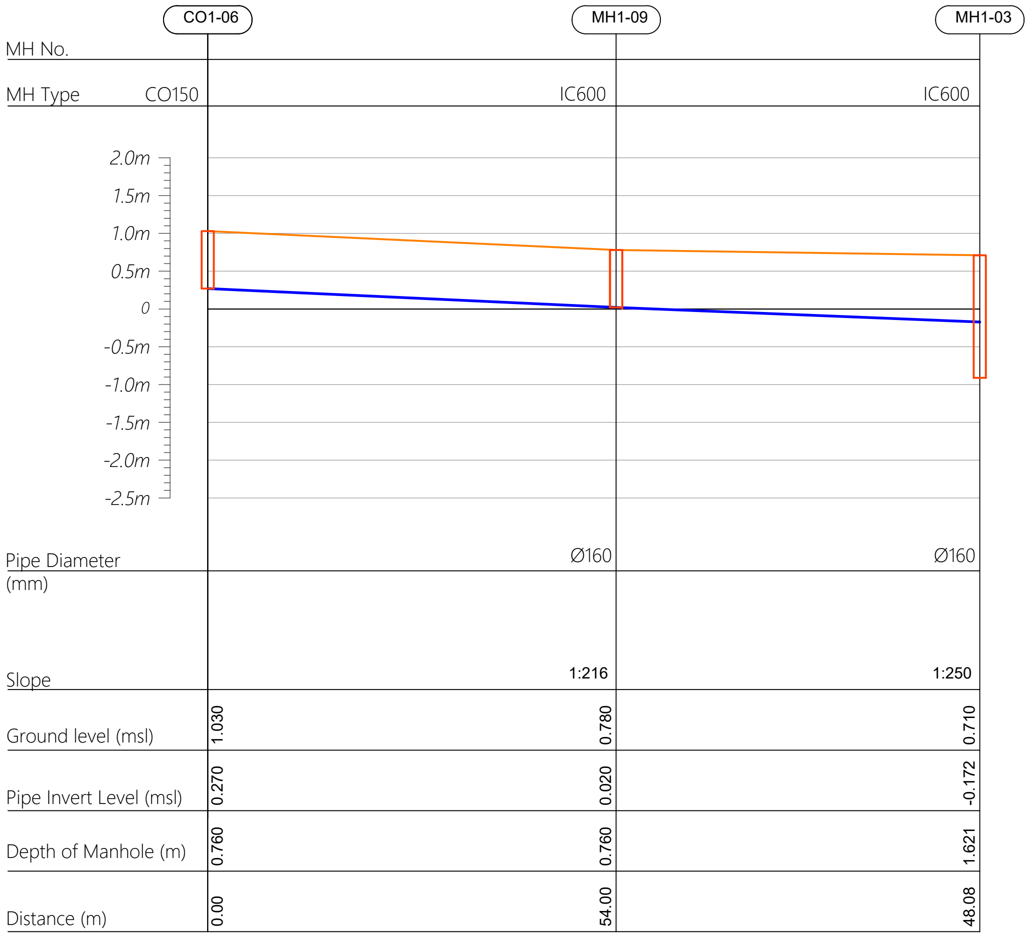

| | | | |
|---|---|---|---|
| MH No. | CO1-06 | MH1-09 | MH1-03 |
| MH Type | CO150 | IC600 | IC600 |
| Pipe Diameter (mm) | | Ø160 | Ø160 |
| Slope | | 1:216 | 1:250 |
| Ground level (msl) | 1.030 | 0.780 | 0.710 |
| Pipe Invert Level (msl) | 0.270 | 0.020 | -0.172 |
| Depth of Manhole (m) | 0.760 | 0.760 | 1.621 |
| Distance (m) | 0.00 | 54.00 | 48.08 |

## Profile 07

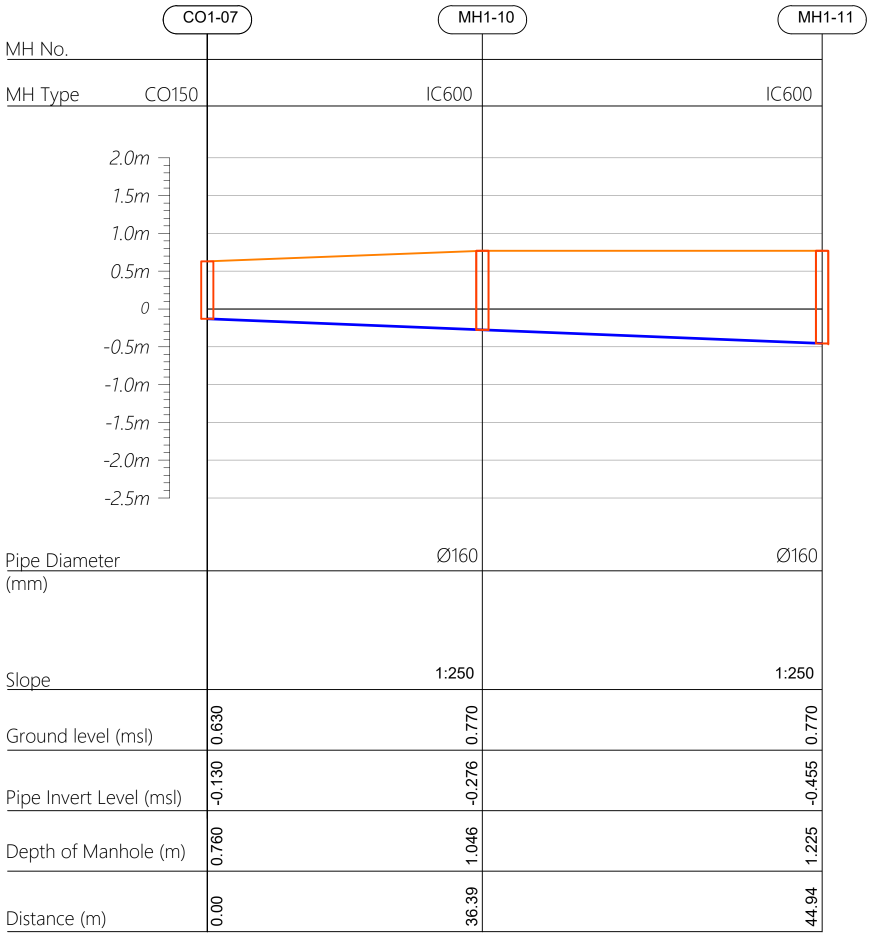

| | | | |
|---|---|---|---|
| MH No. | CO1-07 | MH1-10 | MH1-11 |
| MH Type | CO150 | IC600 | IC600 |
| Pipe Diameter (mm) | | Ø160 | Ø160 |
| Slope | | 1:250 | 1:250 |
| Ground level (msl) | 0.630 | 0.770 | 0.770 |
| Pipe Invert Level (msl) | -0.130 | -0.276 | -0.455 |
| Depth of Manhole (m) | 0.760 | 1.046 | 1.225 |
| Distance (m) | 0.00 | 36.39 | 44.94 |

HORIZONTAL SCALE 0 5 10 15 20 25m

VERTICAL SCALE 0 0.5 1.0 1.5 2.0 2.5m

CO160 — Cleanout ø160
IC600 — HDPE Manhole ø600
PS — Pump Station

| | | | | | |
|---|---|---|---|---|---|
| | | | | | |
| | | | | | |
| | | | | | |
| | | | | | |
| R00 | JUNE 2020 | STAGE -1 | PD | SBC | SD |
| REV. NO. | Date | Revision Description | Drawn | Chkd | Appd. |

Title:
*Consultancy Services for Survey, Design and EIA works of Water Supply and Sewerage Facilities in 5 islands, Maldives - Package 6*

Sub Title:
*Sewerage System in L.Kunahandhoo*

Client:
*Ministry of National Planning, Housing and Infrastructure, Republic of Maldives*

EPOCH ASSOCIATES
T: +960 333 3528
E: info@epoch.associates
W: www.epoch.associates
A: G. Rosary West,
Husnuheenaa Magu, Male', Maldives

FEEDBACK INFRA
Making Infrastructure Happen

Drawn: A.R.W
Checked: M.S.S
Designed: F.I.A
Approved: I.W
Date: Aug 2020
SCALE (A3): 1:100
Project No: 01010101
Rev: R-01
Page: PS1-03

## Profile 07

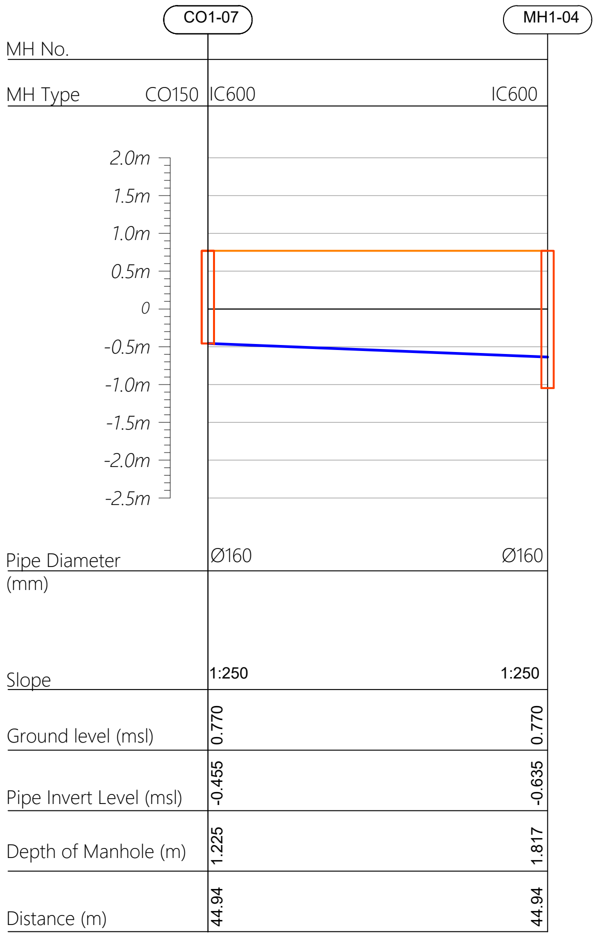

| MH No. | CO1-07 | MH1-04 |
|---|---|---|
| MH Type | CO150 IC600 | IC600 |
| Pipe Diameter (mm) | Ø160 | Ø160 |
| Slope | 1:250 | 1:250 |
| Ground level (msl) | 0.770 | 0.770 |
| Pipe Invert Level (msl) | -0.455 | -0.635 |
| Depth of Manhole (m) | 1.225 | 1.817 |
| Distance (m) | 44.94 | 44.94 |

## Profile 08

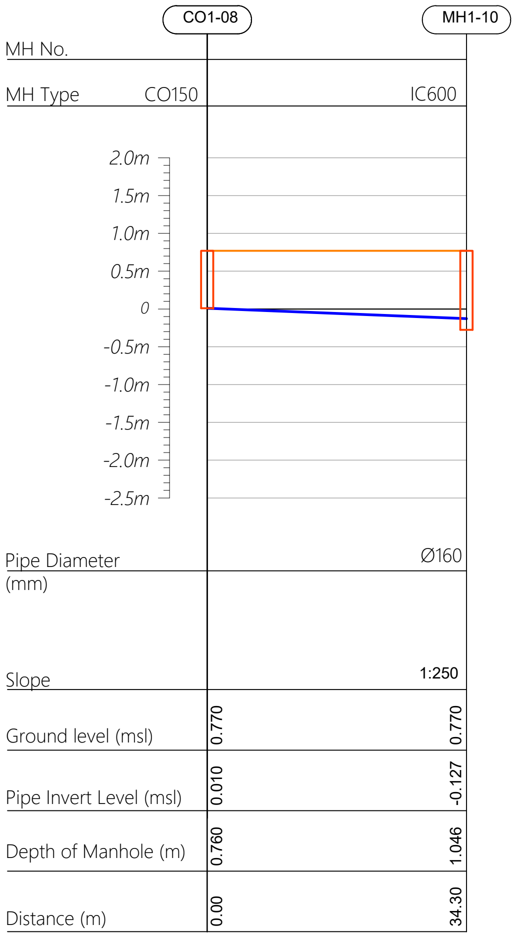

| MH No. | CO1-08 | MH1-10 |
|---|---|---|
| MH Type | CO150 | IC600 |
| Pipe Diameter (mm) |  | Ø160 |
| Slope |  | 1:250 |
| Ground level (msl) | 0.770 | 0.770 |
| Pipe Invert Level (msl) | 0.010 | -0.127 |
| Depth of Manhole (m) | 0.760 | 1.046 |
| Distance (m) | 0.00 | 34.30 |

## Profile 09

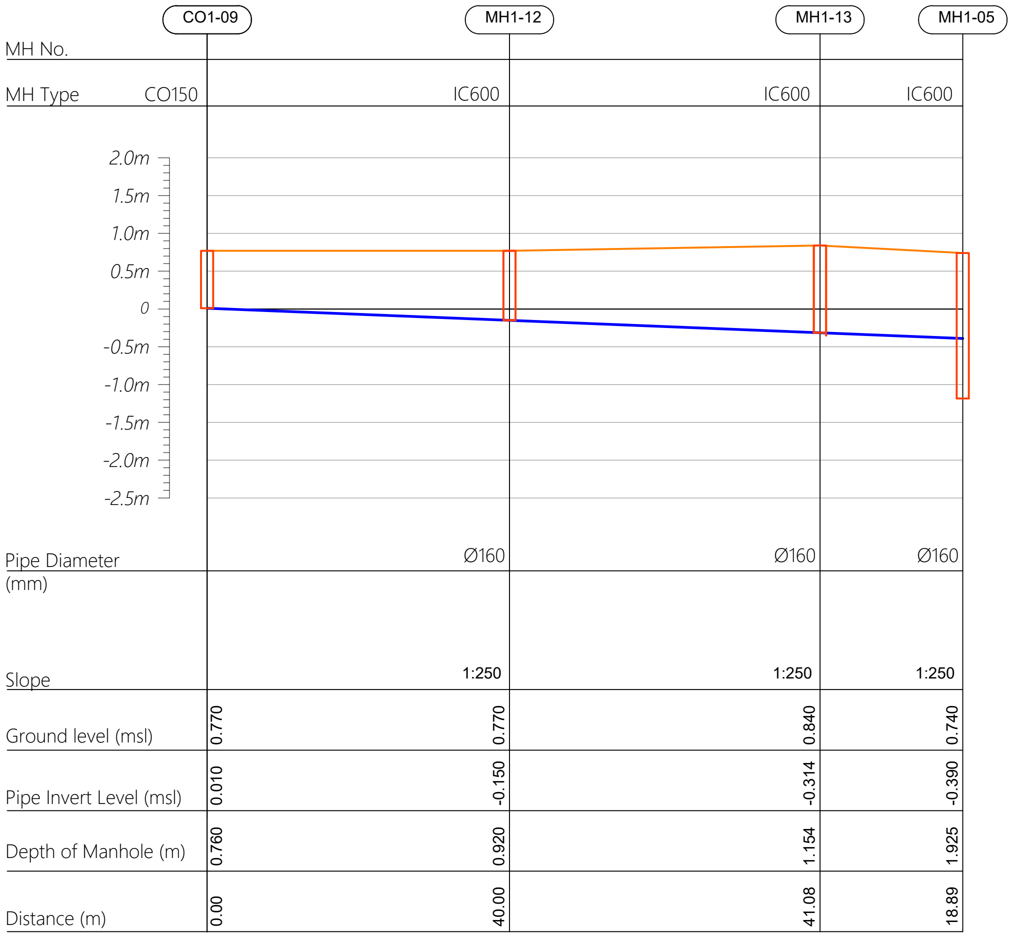

| MH No. | CO1-09 | MH1-12 | MH1-13 | MH1-05 |
|---|---|---|---|---|
| MH Type | CO150 | IC600 | IC600 | IC600 |
| Pipe Diameter (mm) |  | Ø160 | Ø160 | Ø160 |
| Slope |  | 1:250 | 1:250 | 1:250 |
| Ground level (msl) | 0.770 | 0.770 | 0.840 | 0.740 |
| Pipe Invert Level (msl) | 0.010 | -0.150 | -0.314 | -0.390 |
| Depth of Manhole (m) | 0.760 | 0.920 | 1.154 | 1.925 |
| Distance (m) | 0.00 | 40.00 | 41.08 | 18.89 |

HORIZONTAL SCALE 0 5 10 15 20 25m

VERTICAL SCALE 0 0.5 1.0 1.5 2.0 2.5m

CO160 — Cleanout ø160
IC600 — HDPE Manhole ø600
PS — Pump Station

| | | | | | |
|---|---|---|---|---|---|
| | | | | | |
| | | | | | |
| | | | | | |
| | | | | | |
| R00 | JUNE 2020 | STAGE -1 | PD | SBC | SD |
| REV. NO. | Date | Revision Description | Drawn | Chkd | Appd. |

Title:
*Consultancy Services for Survey, Design and EIA works of Water Supply and Sewerage Facilities in 5 islands, Maldives - Package 6*

Sub Title:
*Sewerage System in L.Kunahandhoo*

Client:
*Ministry of National Planning, Housing and Infrastructure, Republic of Maldives*

EPOCH ASSOCIATES
**T**: +960 333 3528
**E**: info@epoch.associates
**W**: wwww.epoch.associates
**A**: G. Rosary West,
Husnuheenaa Magu, Male', Maldives

FEEDBACK INFRA
Making Infrastructure Happen

Drawn: A.R.W
Checked: M.S.S
Designed: F.I.A
Approved: I.W
Date: Aug 2020
SCALE (A3): 1:100
Project No: 01010101
Rev: *R-01*
Page: ***PS1-04***

## Profile 10

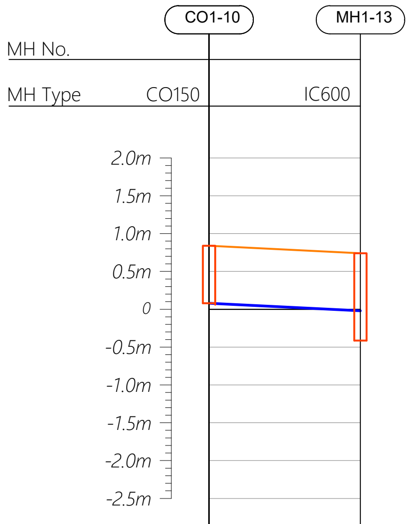

| | | |
|---|---|---|
| MH No. | CO1-10 | MH1-13 |
| MH Type | CO150 | IC600 |
| Pipe Diameter (mm) | | Ø160 |
| Slope | | 1:200 |
| Ground level (msl) | 0.840 | 0.740 |
| Pipe Invert Level (msl) | 0.080 | -0.020 |
| Depth of Manhole (m) | 0.760 | 1.154 |
| Distance (m) | 0.00 | 20.00 |

## Profile 11

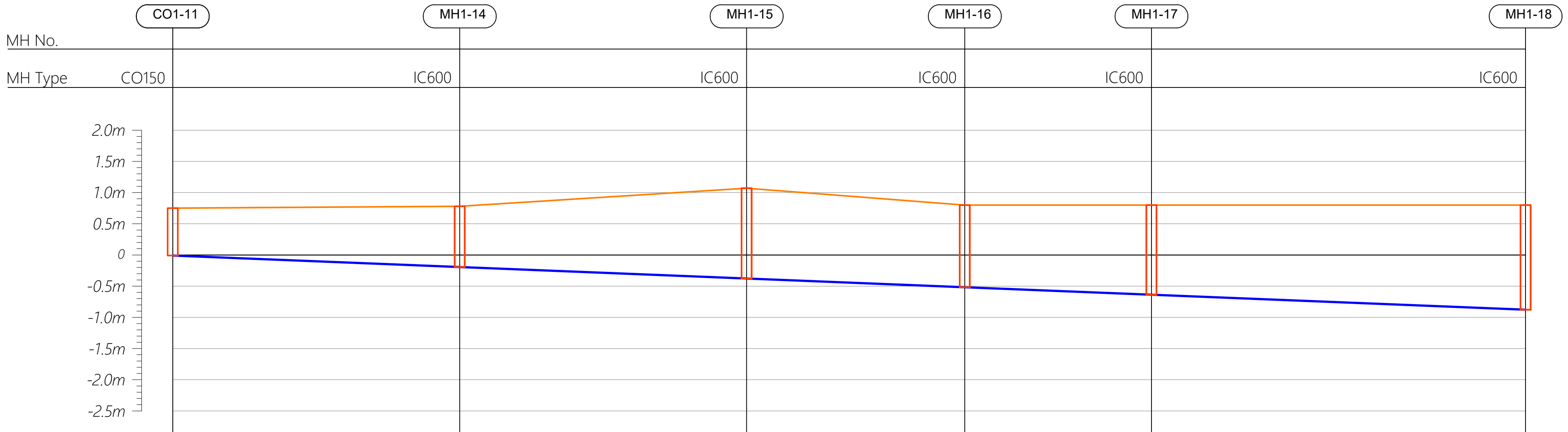

| | | | | | | |
|---|---|---|---|---|---|---|
| MH No. | CO1-11 | MH1-14 | MH1-15 | MH1-16 | MH1-17 | MH1-18 |
| MH Type | CO150 | IC600 | IC600 | IC600 | IC600 | IC600 |
| Pipe Diameter (mm) | | Ø160 | Ø160 | Ø160 | Ø160 | Ø160 |
| Slope | | 1:250 | 1:250 | 1:250 | 1:250 | 1:250 |
| Ground level (msl) | 0.750 | 0.780 | 1.070 | 0.800 | 0.800 | 0.800 |
| Pipe Invert Level (msl) | -0.010 | -0.194 | -0.378 | -0.518 | -0.638 | -0.878 |
| Depth of Manhole (m) | 0.760 | 0.974 | 1.448 | 1.318 | 1.438 | 1.678 |
| Distance (m) | 0.00 | 46.02 | 46.02 | 34.99 | 29.94 | 60.00 |

HORIZONTAL SCALE 0 5 10 15 20 25m

VERTICAL SCALE 0 0.5 1.0 1.5 2.0 2.5m

CO160 — Cleanout ø160
IC600 — HDPE Manhole ø600
PS — Pump Station

| | | | | | |
|---|---|---|---|---|---|
| | | | | | |
| | | | | | |
| | | | | | |
| | | | | | |
| | | | | | |
| R00 | JUNE 2020 | STAGE -1 | PD | SBC | SD |
| REV. NO. | Date | Revision Description | Drawn | Chkd | Appd. |

Title:
*Consultancy Services for Survey, Design and EIA works of Water Supply and Sewerage Facilities in 5 islands, Maldives - Package 6*

Sub Title:
*Sewerage System in L.Kunahandhoo*

Client:
*Ministry of National Planning, Housing and Infrastructure, Republic of Maldives*

EPOCH ASSOCIATES
**T**: +960 333 3528
**E**: info@epoch.associates
**W**: www.epoch.associates
**A**: G. Rosary West, Husnuheenaa Magu, Male', Maldives

FEEDBACK INFRA
Making Infrastructure Happen

| | | | |
|---|---|---|---|
| Drawn: | A.R.W | Checked: | M.S.S |
| Designed: | F.I.A | Approved: | I.W |
| Date: | Aug 2020 | SCALE (A3): | 1:100 |
| Project No: | 01010101 | | |
| Rev: | R-01 | Page: | PS1-05 |

## Profile 11

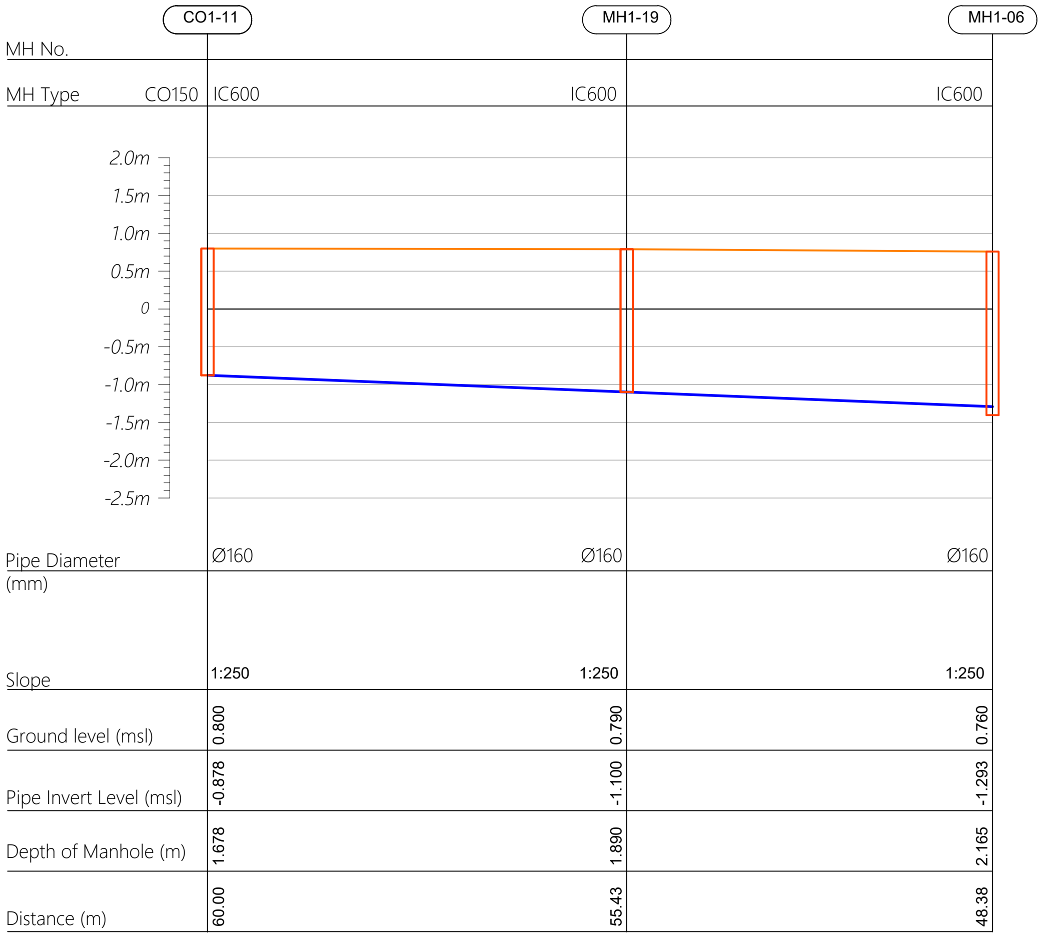

| MH No. | CO1-11 | MH1-19 | MH1-06 |
|---|---|---|---|
| MH Type | CO150 IC600 | IC600 | IC600 |
| Pipe Diameter (mm) | Ø160 | Ø160 | Ø160 |
| Slope | 1:250 | 1:250 | 1:250 |
| Ground level (msl) | 0.800 | 0.790 | 0.760 |
| Pipe Invert Level (msl) | -0.878 | -1.100 | -1.293 |
| Depth of Manhole (m) | 1.678 | 1.890 | 2.165 |
| Distance (m) | 60.00 | 55.43 | 48.38 |

## Profile 12

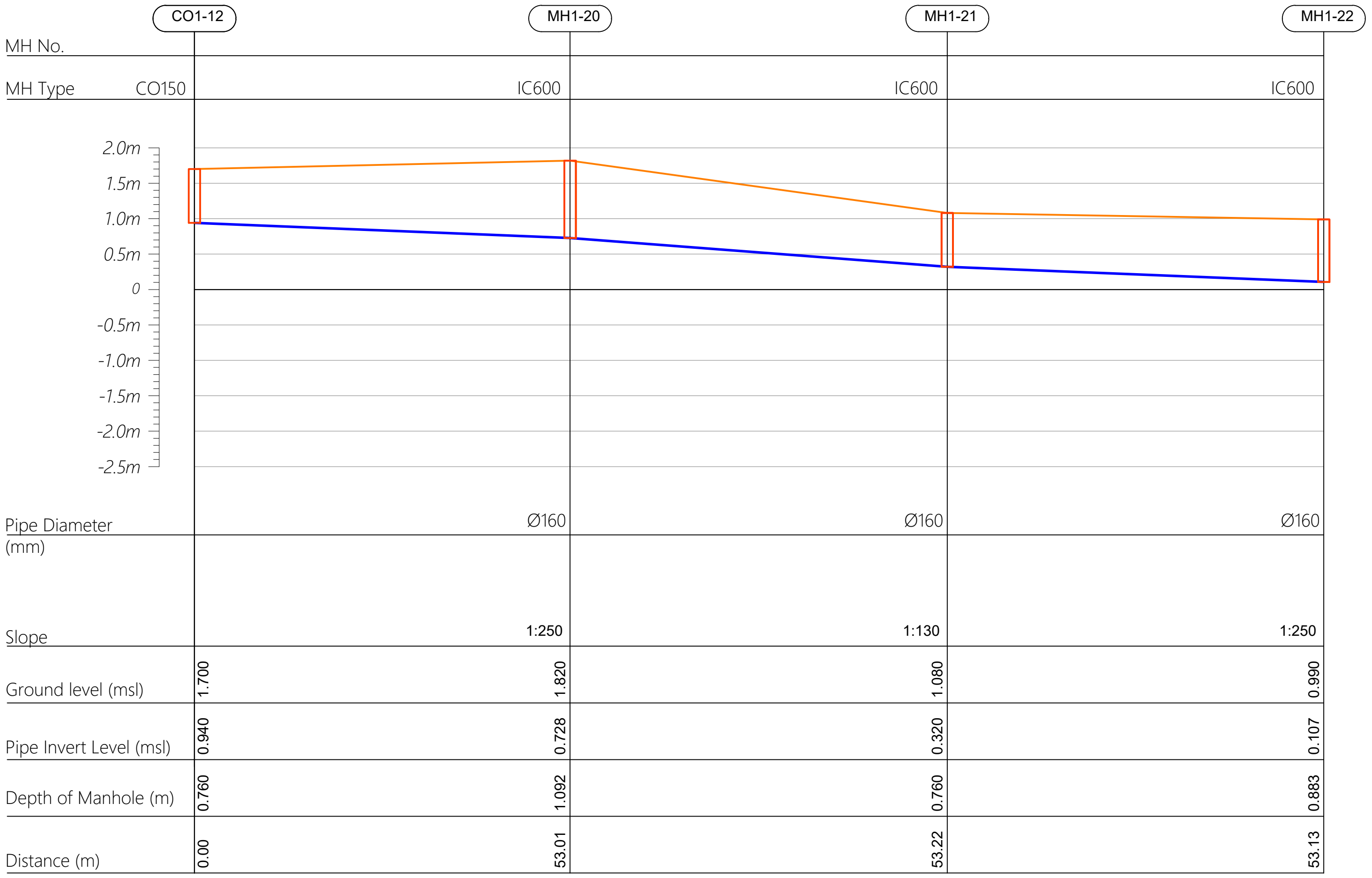

| MH No. | CO1-12 | MH1-20 | MH1-21 | MH1-22 |
|---|---|---|---|---|
| MH Type | CO150 | IC600 | IC600 | IC600 |
| Pipe Diameter (mm) | | Ø160 | Ø160 | Ø160 |
| Slope | | 1:250 | 1:130 | 1:250 |
| Ground level (msl) | 1.700 | 1.820 | 1.080 | 0.990 |
| Pipe Invert Level (msl) | 0.940 | 0.728 | 0.320 | 0.107 |
| Depth of Manhole (m) | 0.760 | 1.092 | 0.760 | 0.883 |
| Distance (m) | 0.00 | 53.01 | 53.22 | 53.13 |

HORIZONTAL SCALE 0 5 10 15 20 25m

VERTICAL SCALE 0 0.5 1.0 1.5 2.0 2.5m

CO160 — Cleanout ɸ160
IC600 — HDPE Manhole ɸ600
PS — Pump Station

| | | | | | |
|---|---|---|---|---|---|
| | | | | | |
| | | | | | |
| | | | | | |
| | | | | | |
| | | | | | |
| R00 | JUNE 2020 | STAGE -1 | PD | SBC | SD |
| REV. NO. | Date | Revision Description | Drawn | Chkd | Appd. |

Title:
*Consultancy Services for Survey, Design and EIA works of Water Supply and Sewerage Facilities in 5 islands, Maldives - Package 6*

Sub Title:
*Sewerage System in L.Kunahandhoo*

Client:
*Ministry of National Planning, Housing and Infrastructure, Republic of Maldives*

EPOCH ASSOCIATES
**T**: +960 333 3528
**E**: info@epoch.associates
**W**: wwww.epoch.associates
**A**: G. Rosary West,
Husnuheenaa Magu, Male', Maldives

FEEDBACK INFRA
Making Infrastructure Happen

Drawn: A.R.W
Checked: M.S.S
Designed: F.I.A
Approved: I.W
Date: Aug 2020
SCALE (A3): 1:100
Project No: 01010101
Rev: *R-01*
Page: ***PS1-06***

## Profile 12

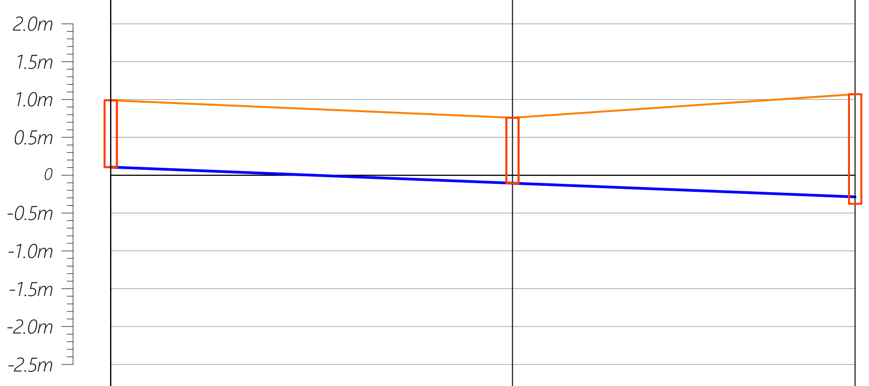

| MH No. | CO1-12 | MH1-23 | MH1-15 |
|---|---|---|---|
| MH Type | CO150<br>IC600 | IC600 | IC600 |
| Pipe Diameter (mm) | Ø160 | Ø160 | Ø160 |
| Slope | 1:250 | 1:250 | 1:250 |
| Ground level (msl) | 0.990 | 0.760 | 1.070 |
| Pipe Invert Level (msl) | 0.107 | -0.105 | -0.286 |
| Depth of Manhole (m) | 0.883 | 0.865 | 1.448 |
| Distance (m) | 53.13 | 53.12 | 45.30 |

## Profile 13

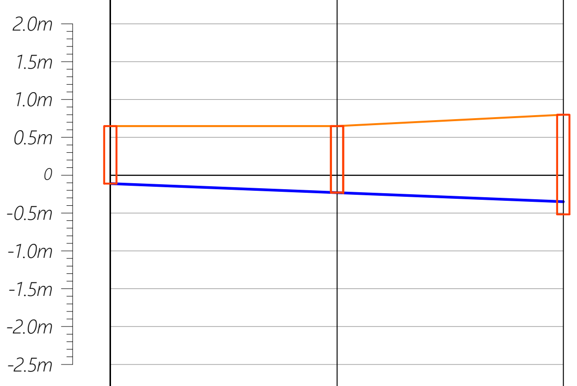

| MH No. | CO1-13 | MH1-24 | MH1-16 |
|---|---|---|---|
| MH Type | CO150 | IC600 | IC600 |
| Pipe Diameter (mm) | | Ø160 | Ø160 |
| Slope | | 1:250 | 1:250 |
| Ground level (msl) | 0.650 | 0.650 | 0.800 |
| Pipe Invert Level (msl) | -0.110 | -0.230 | -0.350 |
| Depth of Manhole (m) | 0.760 | 0.880 | 1.318 |
| Distance (m) | 0.00 | 30.00 | 29.93 |

## Profile 14

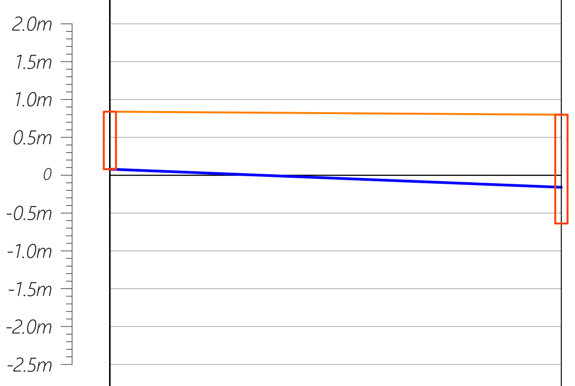

| MH No. | CO1-14 | MH1-17 |
|---|---|---|
| MH Type | CO150 | IC600 |
| Pipe Diameter (mm) | | Ø160 |
| Slope | | 1:250 |
| Ground level (msl) | 0.840 | 0.800 |
| Pipe Invert Level (msl) | 0.080 | -0.159 |
| Depth of Manhole (m) | 0.760 | 1.438 |
| Distance (m) | 0.00 | 59.68 |

HORIZONTAL SCALE 0 5 10 15 20 25m

VERTICAL SCALE 0 0.5 1.0 1.5 2.0 2.5m

CO160 — Cleanout ø160
IC600 — HDPE Manhole ø600
PS — Pumр Station

| | | | | | |
|---|---|---|---|---|---|
| R00 | JUNE 2020 | STAGE -1 | PD | SBC | SD |
| REV. NO. | Date | Revision Description | Drawn | Chkd | Appd. |

Title:
*Consultancy Services for Survey, Design and EIA works of Water Supply and Sewerage Facilities in 5 islands, Maldives - Package 6*

Sub Title:
*Sewerage System in L.Kunahandhoo*

Client:
*Ministry of National Planning, Housing and Infrastructure, Republic of Maldives*

EPOCH ASSOCIATES
T: +960 333 3528
E: info@epoch.associates
W: www.epoch.associates
A: G. Rosary West, Husnuheenaa Magu, Male', Maldives

FEEDBACK INFRA
Making Infrastructure Happen

| | | | |
|---|---|---|---|
| Drawn: | A.R.W | Checked: | M.S.S |
| Designed: | F.I.A | Approved: | I.W |
| Date: | Aug 2020 | SCALE (A3): | 1:100 |
| Project No: | 01010101 | | |
| Rev: | R-01 | Page: | PS1-07 |

## Profile 15

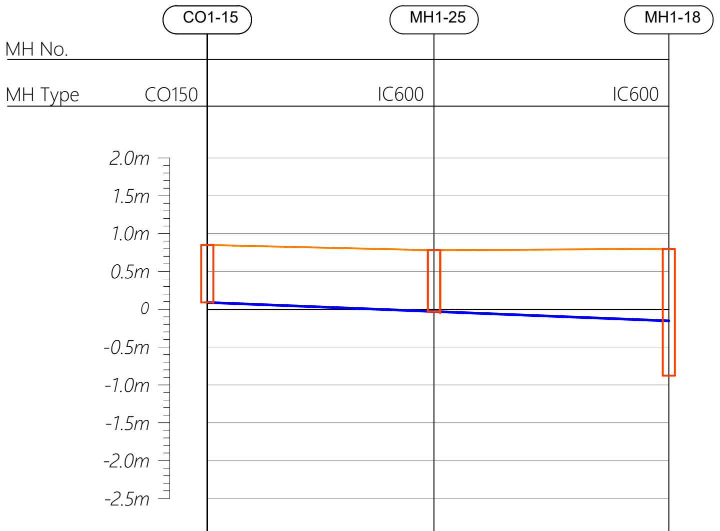
CO1-15
MH1-25
MH1-18
2.0m
1.5m
1.0m
0.5m
0
-0.5m
-1.0m
-1.5m
-2.0m
-2.5m

| | | | |
|---|---|---|---|
| MH No. | CO1-15 | MH1-25 | MH1-18 |
| MH Type | CO150 | IC600 | IC600 |
| Pipe Diameter (mm) | | Ø160 | Ø160 |
| Slope | | 1:250 | 1:250 |
| Ground level (msl) | 0.850 | 0.780 | 0.800 |
| Pipe Invert Level (msl) | 0.090 | -0.030 | -0.154 |
| Depth of Manhole (m) | 0.760 | 0.810 | 1.678 |
| Distance (m) | 0.00 | 30.00 | 31.06 |

## Profile 16

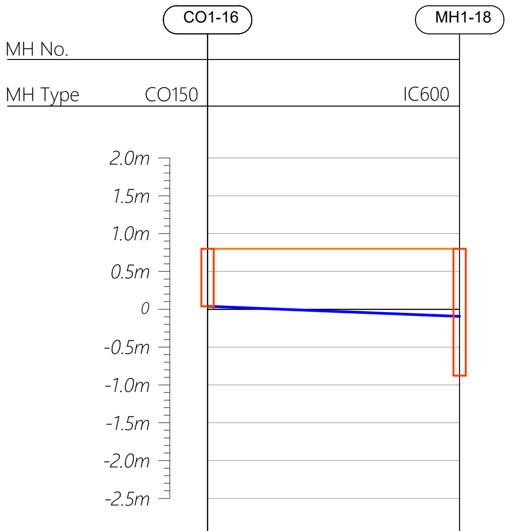
CO1-16
MH1-18
2.0m
1.5m
1.0m
0.5m
0
-0.5m
-1.0m
-1.5m
-2.0m
-2.5m

| | | |
|---|---|---|
| MH No. | CO1-16 | MH1-18 |
| MH Type | CO150 | IC600 |
| Pipe Diameter (mm) | | Ø160 |
| Slope | | 1:250 |
| Ground level (msl) | 0.800 | 0.800 |
| Pipe Invert Level (msl) | 0.040 | -0.093 |
| Depth of Manhole (m) | 0.760 | 1.678 |
| Distance (m) | 0.00 | 33.31 |

## Profile 17

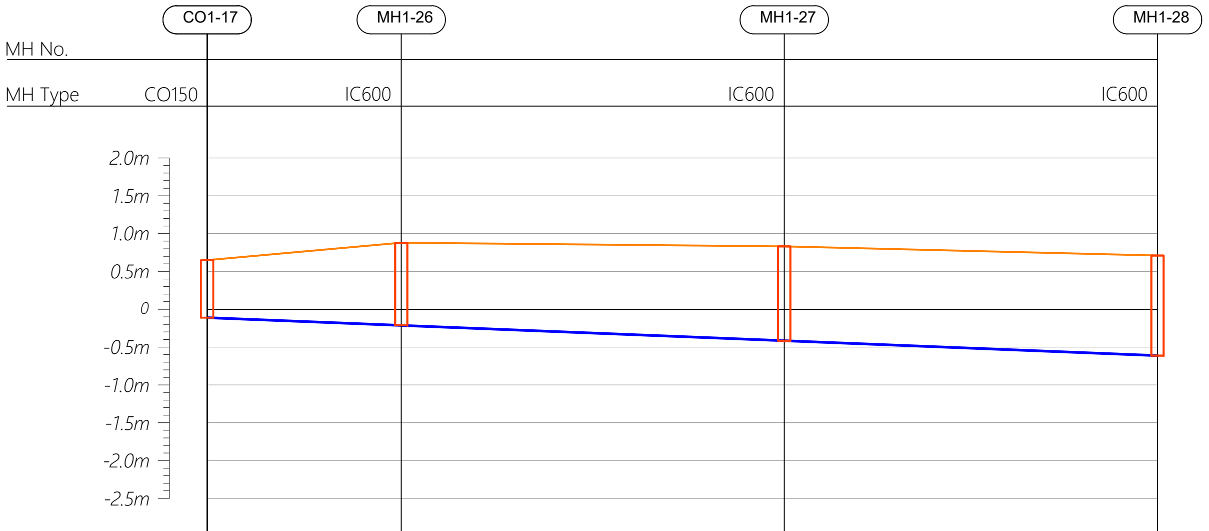
CO1-17
MH1-26
MH1-27
MH1-28
2.0m
1.5m
1.0m
0.5m
0
-0.5m
-1.0m
-1.5m
-2.0m
-2.5m

| | | | | |
|---|---|---|---|---|
| MH No. | CO1-17 | MH1-26 | MH1-27 | MH1-28 |
| MH Type | CO150 | IC600 | IC600 | IC600 |
| Pipe Diameter (mm) | | Ø160 | Ø160 | Ø160 |
| Slope | | 1:250 | 1:250 | 1:250 |
| Ground level (msl) | 0.650 | 0.880 | 0.830 | 0.710 |
| Pipe Invert Level (msl) | -0.110 | -0.213 | -0.415 | -0.613 |
| Depth of Manhole (m) | 0.760 | 1.093 | 1.245 | 1.323 |
| Distance (m) | 0.00 | 25.68 | 50.67 | 49.38 |

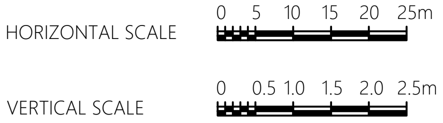
HORIZONTAL SCALE
0 5 10 15 20 25m
VERTICAL SCALE
0 0.5 1.0 1.5 2.0 2.5m

CO160 — Cleanout ϕ160
IC600 — HDPE Manhole ϕ600
PS — Pump Station

| REV. NO. | Date | Revision Description | Drawn | Chkd | Appd. |
|---|---|---|---|---|---|
| R00 | JUNE 2020 | STAGE -1 | PD | SBC | SD |

Title:
*Consultancy Services for Survey, Design and EIA works of Water Supply and Sewerage Facilities in 5 islands, Maldives - Package 6*

Sub Title:
*Sewerage System in L.Kunahandhoo*

Client:
*Ministry of National Planning, Housing and Infrastructure, Republic of Maldives*

EPOCH ASSOCIATES
**T**: +960 333 3528
**E**: info@epoch.associates
**W**: wwww.epoch.associates
**A**: G. Rosary West,
Husnuheenaa Magu, Male', Maldives

FEEDBACK INFRA
Making Infrastructure Happen

Drawn: A.R.W
Checked: M.S.S
Designed: F.I.A
Approved: I.W
Date: Aug 2020
SCALE (A3): 1:100
Project No: 01010101
Rev: *R-01*
Page: ***PS1-08***

## Profile 17

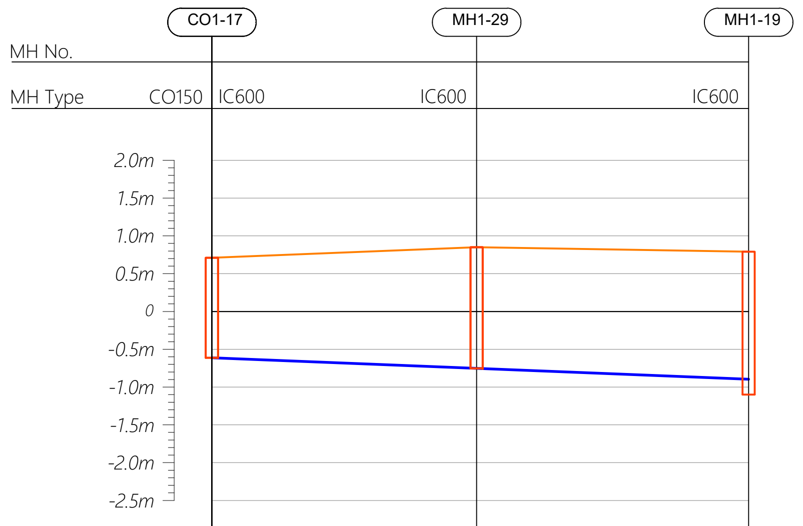
CO1-17
MH1-29
MH1-19
MH No.
MH Type
2.0m
1.5m
1.0m
0.5m
0
-0.5m
-1.0m
-1.5m
-2.0m
-2.5m

| MH No. | CO1-17 | MH1-29 | MH1-19 |
|---|---|---|---|
| MH Type | CO150 IC600 | IC600 | IC600 |
| Pipe Diameter (mm) | Ø160 | Ø160 | Ø160 |
| Slope | 1:250 | 1:250 | 1:250 |
| Ground level (msl) | 0.710 | 0.850 | 0.790 |
| Pipe Invert Level (msl) | -0.613 | -0.753 | -0.897 |
| Depth of Manhole (m) | 1.323 | 1.603 | 1.890 |
| Distance (m) | 49.38 | 35.00 | 35.96 |

## Profile 18

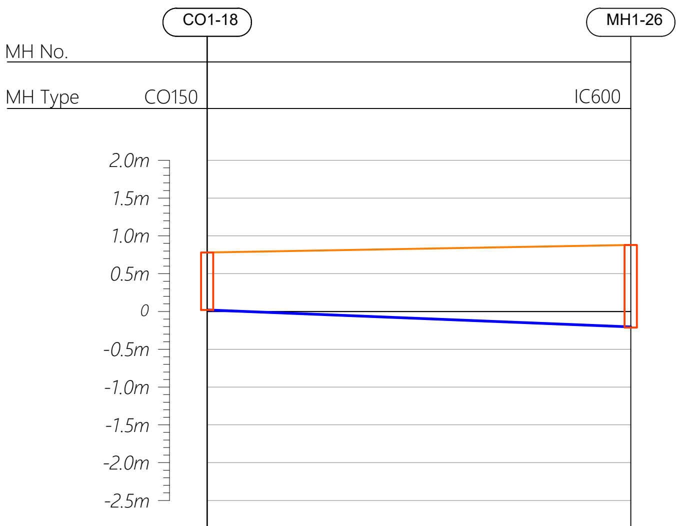
CO1-18
MH1-26
MH No.
MH Type
2.0m
1.5m
1.0m
0.5m
0
-0.5m
-1.0m
-1.5m
-2.0m
-2.5m

| MH No. | CO1-18 | MH1-26 |
|---|---|---|
| MH Type | CO150 | IC600 |
| Pipe Diameter (mm) |  | Ø160 |
| Slope |  | 1:250 |
| Ground level (msl) | 0.780 | 0.880 |
| Pipe Invert Level (msl) | 0.020 | -0.204 |
| Depth of Manhole (m) | 0.760 | 1.093 |
| Distance (m) | 0.00 | 56.04 |

## Profile 19

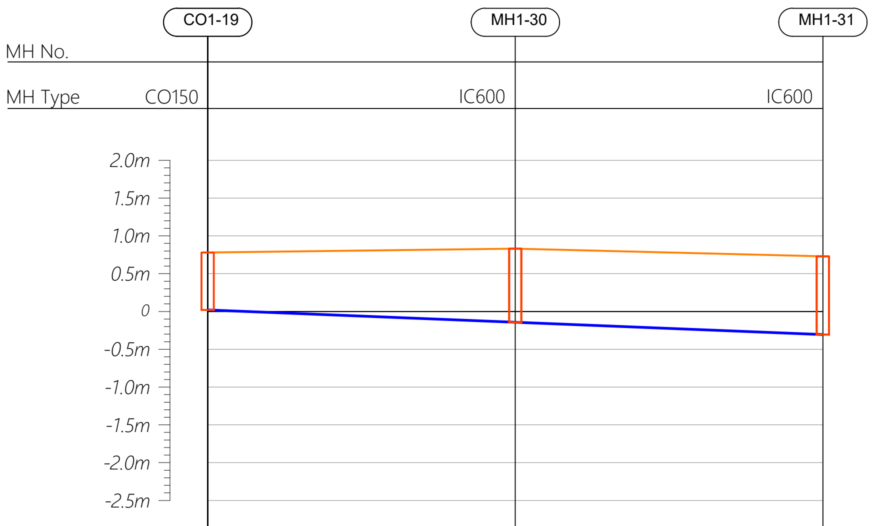
CO1-19
MH1-30
MH1-31
MH No.
MH Type
2.0m
1.5m
1.0m
0.5m
0
-0.5m
-1.0m
-1.5m
-2.0m
-2.5m

| MH No. | CO1-19 | MH1-30 | MH1-31 |
|---|---|---|---|
| MH Type | CO150 | IC600 | IC600 |
| Pipe Diameter (mm) |  | Ø160 | Ø160 |
| Slope |  | 1:250 | 1:250 |
| Ground level (msl) | 0.780 | 0.830 | 0.730 |
| Pipe Invert Level (msl) | 0.020 | -0.143 | -0.306 |
| Depth of Manhole (m) | 0.760 | 0.973 | 1.036 |
| Distance (m) | 0.00 | 40.69 | 40.69 |

HORIZONTAL SCALE 0 5 10 15 20 25m

VERTICAL SCALE 0 0.5 1.0 1.5 2.0 2.5m

CO160 — Cleanout ø160
IC600 — HDPE Manhole ø600
PS — Pump Station

| REV. NO. | Date | Revision Description | Drawn | Chkd | Appd. |
|---|---|---|---|---|---|
|  |  |  |  |  |  |
|  |  |  |  |  |  |
|  |  |  |  |  |  |
|  |  |  |  |  |  |
|  |  |  |  |  |  |
| R00 | JUNE 2020 | STAGE -1 | PD | SBC | SD |

Title:
*Consultancy Services for Survey, Design and EIA works of Water Supply and Sewerage Facilities in 5 islands, Maldives - Package 6*

Sub Title:
*Sewerage System in L.Kunahandhoo*

Client:
*Ministry of National Planning, Housing and Infrastructure, Republic of Maldives*

EPOCH ASSOCIATES
**T**: +960 333 3528
**E**: info@epoch.associates
**W**: wwww.epoch.associates
**A**: G. Rosary West,
Husnuheenaa Magu, Male', Maldives

FEEDBACK INFRA
Making Infrastructure Happen

Drawn: A.R.W
Checked: M.S.S
Designed: F.I.A
Approved: I.W
Date: Aug 2020
SCALE (A3): 1:100
Project No: 01010101
Rev: *R-01*
Page: ***PS1-09***

## Profile 19

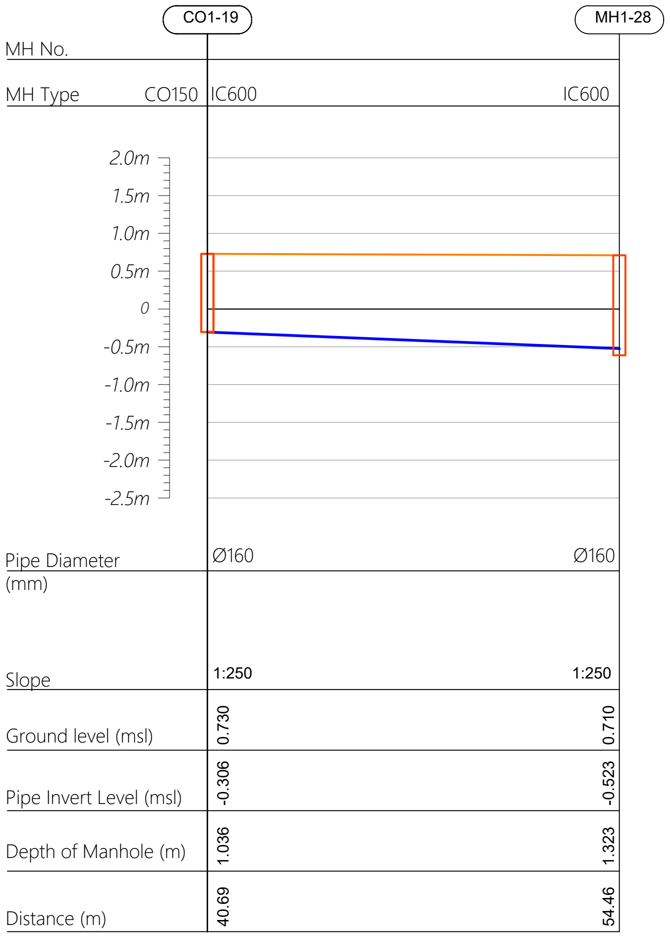

CO1-19
MH1-28
2.0m
1.5m
1.0m
0.5m
0
-0.5m
-1.0m
-1.5m
-2.0m
-2.5m

| | CO1-19 | MH1-28 |
|---|---|---|
| MH No. | CO1-19 | MH1-28 |
| MH Type | CO150 \| IC600 | IC600 |
| Pipe Diameter (mm) | Ø160 | Ø160 |
| Slope | 1:250 | 1:250 |
| Ground level (msl) | 0.730 | 0.710 |
| Pipe Invert Level (msl) | -0.306 | -0.523 |
| Depth of Manhole (m) | 1.036 | 1.323 |
| Distance (m) | 40.69 | 54.46 |

## Profile 20

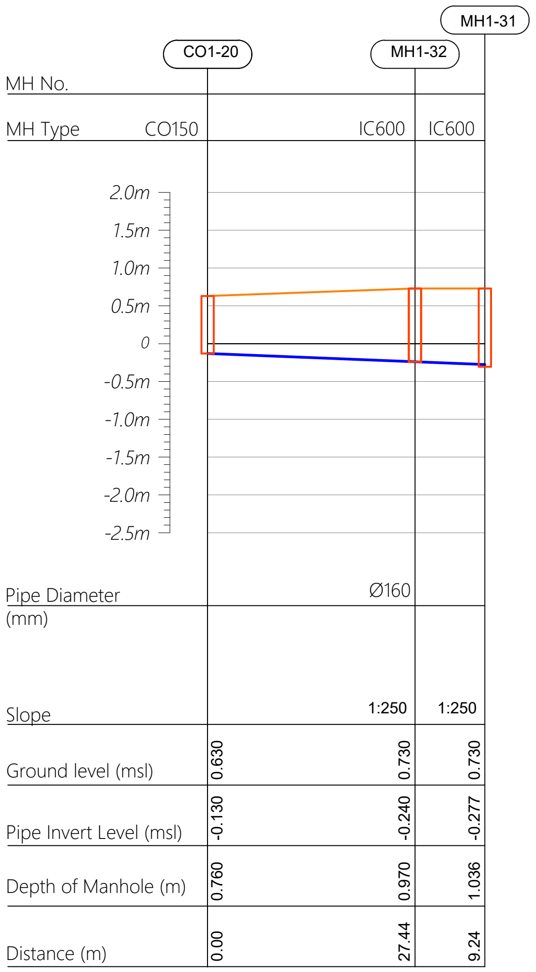

CO1-20
MH1-32
MH1-31
2.0m
1.5m
1.0m
0.5m
0
-0.5m
-1.0m
-1.5m
-2.0m
-2.5m

| | CO1-20 | MH1-32 | MH1-31 |
|---|---|---|---|
| MH No. | CO1-20 | MH1-32 | MH1-31 |
| MH Type | CO150 | IC600 | IC600 |
| Pipe Diameter (mm) | | Ø160 | |
| Slope | | 1:250 | 1:250 |
| Ground level (msl) | 0.630 | 0.730 | 0.730 |
| Pipe Invert Level (msl) | -0.130 | -0.240 | -0.277 |
| Depth of Manhole (m) | 0.760 | 0.970 | 1.036 |
| Distance (m) | 0.00 | 27.44 | 9.24 |

## Profile 21

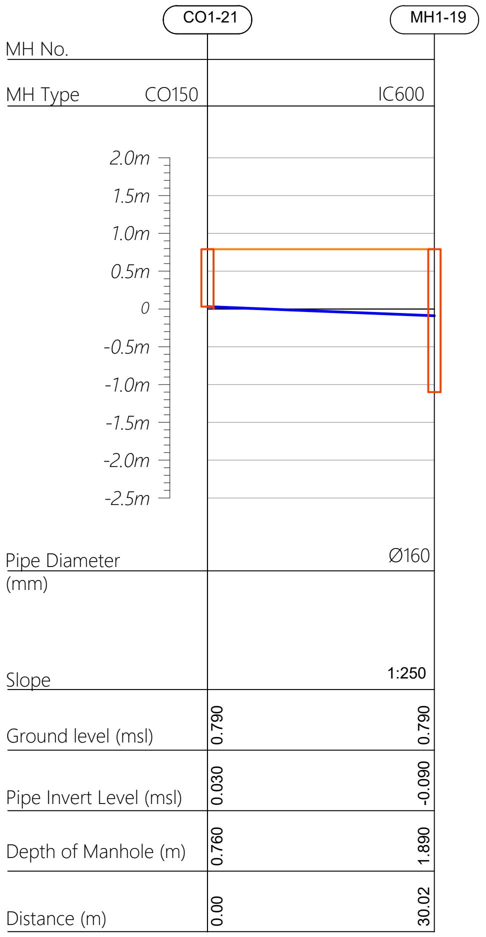

CO1-21
MH1-19
2.0m
1.5m
1.0m
0.5m
0
-0.5m
-1.0m
-1.5m
-2.0m
-2.5m

| | CO1-21 | MH1-19 |
|---|---|---|
| MH No. | CO1-21 | MH1-19 |
| MH Type | CO150 | IC600 |
| Pipe Diameter (mm) | | Ø160 |
| Slope | | 1:250 |
| Ground level (msl) | 0.790 | 0.790 |
| Pipe Invert Level (msl) | 0.030 | -0.090 |
| Depth of Manhole (m) | 0.760 | 1.890 |
| Distance (m) | 0.00 | 30.02 |

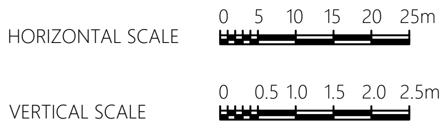

HORIZONTAL SCALE
0 5 10 15 20 25m
VERTICAL SCALE
0 0.5 1.0 1.5 2.0 2.5m

CO160 — Cleanout ø160
IC600 — HDPE Manhole ø600
PS — Pump Station

| | | | | | |
|---|---|---|---|---|---|
| | | | | | |
| | | | | | |
| | | | | | |
| | | | | | |
| | | | | | |
| R00 | JUNE 2020 | STAGE -1 | PD | SBC | SD |
| REV. NO. | Date | Revision Description | Drawn | Chkd | Appd. |

Title:
*Consultancy Services for Survey, Design and EIA works of Water Supply and Sewerage Facilities in 5 islands, Maldives - Package 6*

Sub Title:
*Sewerage System in L.Kunahandhoo*

Client:
*Ministry of National Planning, Housing and Infrastructure, Republic of Maldives*

EPOCH ASSOCIATES
**T**: +960 333 3528
**E**: info@epoch.associates
**W**: wwww.epoch.associates
**A**: G. Rosary West,
Husnuheenaa Magu, Male', Maldives

FEEDBACK INFRA
Making Infrastructure Happen

| | | | |
|---|---|---|---|
| Drawn: | A.R.W | Checked: | M.S.S |
| Designed: | F.I.A | Approved: | I.W |
| Date: | Aug 2020 | SCALE (A3): | 1:100 |
| Project No: | 01010101 | | |
| Rev: | R-01 | Page: | PS1-10 |

## Profile 22

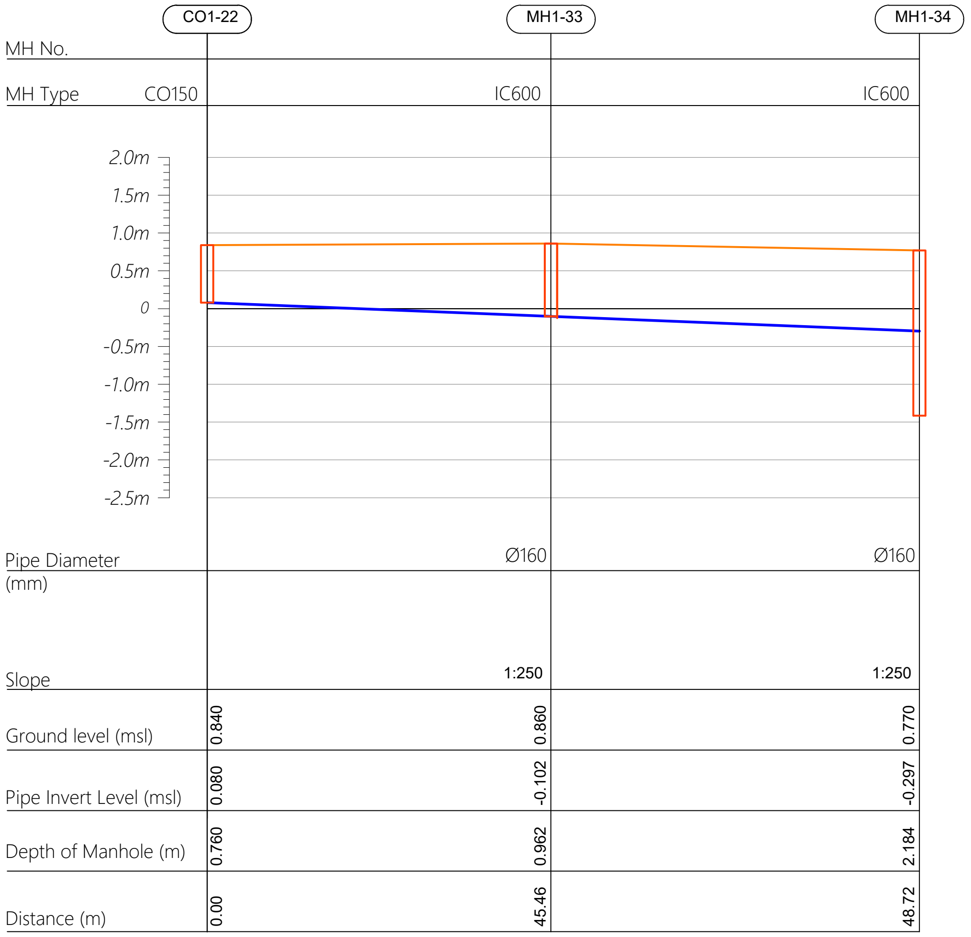

| | CO1-22 | MH1-33 | MH1-34 |
|---|---|---|---|
| MH Type | CO150 | IC600 | IC600 |
| Pipe Diameter (mm) | | Ø160 | Ø160 |
| Slope | | 1:250 | 1:250 |
| Ground level (msl) | 0.840 | 0.860 | 0.770 |
| Pipe Invert Level (msl) | 0.080 | -0.102 | -0.297 |
| Depth of Manhole (m) | 0.760 | 0.962 | 2.184 |
| Distance (m) | 0.00 | 45.46 | 48.72 |

HORIZONTAL SCALE

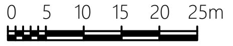

VERTICAL SCALE

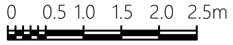

CO160 — Cleanout ø160
IC600 — HDPE Manhole ø600
PS — Pump Station

| | | | | | |
|---|---|---|---|---|---|
| | | | | | |
| | | | | | |
| | | | | | |
| | | | | | |
| | | | | | |
| R00 | JUNE 2020 | STAGE -1 | PD | SBC | SD |
| REV. NO. | Date | Revision Description | Drawn | Chkd | Appd. |

Title:
*Consultancy Services for Survey, Design and EIA works of Water Supply and Sewerage Facilities in 5 islands, Maldives - Package 6*

Sub Title:
*Sewerage System in L.Kunahandhoo*

Client:
*Ministry of National Planning, Housing and Infrastructure, Republic of Maldives*

EPOCH ASSOCIATES
**T**: +960 333 3528
**E**: info@epoch.associates
**W**: wwww.epoch.associates
**A**: G. Rosary West,
Husnuheenaa Magu, Male', Maldives

FEEDBACK INFRA
Making Infrastructure Happen

| | |
|---|---|
| Drawn: A.R.W | Checked: M.S.S |
| Designed: F.I.A | Approved: I.W |
| Date: Aug 2020 | SCALE (A3): 1:100 |
| Project No: 01010101 | |
| Rev: R-01 | Page: PS1-11 |

# Profile 01

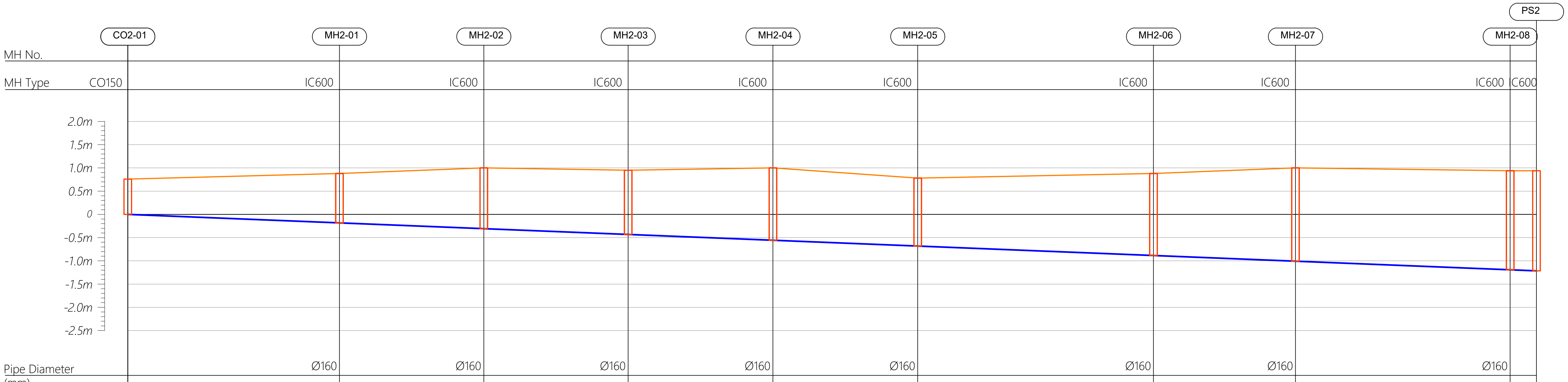

| MH No. | CO2-01 | MH2-01 | MH2-02 | MH2-03 | MH2-04 | MH2-05 | MH2-06 | MH2-07 | MH2-08 | PS2 |
|---|---|---|---|---|---|---|---|---|---|---|
| MH Type | CO150 | IC600 | IC600 | IC600 | IC600 | IC600 | IC600 | IC600 | IC600 | IC600 |
| Pipe Diameter (mm) |  | Ø160 | Ø160 | Ø160 | Ø160 | Ø160 | Ø160 | Ø160 | Ø160 |  |
| Slope |  | 1:250 | 1:250 | 1:250 | 1:250 | 1:250 | 1:250 | 1:250 | 1:250 | 1:250 |
| Ground level (msl) | 0.760 | 0.880 | 1.000 | 0.950 | 1.000 | 0.780 | 0.880 | 1.000 | 0.940 | 0.940 |
| Pipe Invert Level (msl) | 0.000 | -0.183 | -0.307 | -0.432 | -0.556 | -0.681 | -0.885 | -1.007 | -1.192 | -1.215 |
| Depth of Manhole (m) | 0.760 | 1.063 | 1.307 | 1.382 | 1.556 | 1.461 | 1.765 | 2.007 | 2.132 | 2.155 |
| Distance (m) | 0.00 | 45.64 | 31.13 | 31.13 | 31.22 | 31.22 | 50.84 | 30.62 | 46.30 | 5.67 |

HORIZONTAL SCALE 0 5 10 15 20 25m

VERTICAL SCALE 0 0.5 1.0 1.5 2.0 2.5m

CO160 — Cleanout ø160
IC600 — HDPE Manhole ø600
PS — Pump Station

| REV. NO. | Date | Revision Description | Drawn | Chkd | Appd. |
|---|---|---|---|---|---|
| R00 | JUNE 2020 | STAGE -1 | PD | SBC | SD |

Title:
*Consultancy Services for Survey, Design and EIA works of Water Supply and Sewerage Facilities in 5 islands, Maldives - Package 6*

Sub Title:
*Sewerage System in L.Kunahandhoo*

Client:
*Ministry of National Planning, Housing and Infrastructure, Republic of Maldives*

EPOCH ASSOCIATES
**T**: +960 333 3528
**E**: info@epoch.associates
**W**: www.epoch.associates
**A**: G. Rosary West, Husnuheenaa Magu, Male', Maldives

FEEDBACK INFRA
Making Infrastructure Happen

Drawn: A.R.W
Checked: M.S.S
Designed: F.I.A
Approved: I.W
Date: Aug 2020
SCALE (A3): 1:100
Project No: 01010101
Rev: R-01
Page: **PS2-01**

## Profile 02

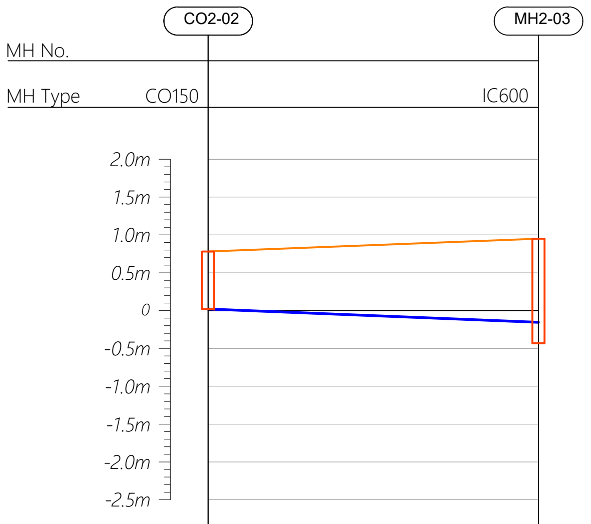

| MH No. | CO2-02 | MH2-03 |
|---|---|---|
| MH Type | CO150 | IC600 |
| Pipe Diameter (mm) | | Ø160 |
| Slope | | 1:250 |
| Ground level (msl) | 0.780 | 0.950 |
| Pipe Invert Level (msl) | 0.020 | -0.155 |
| Depth of Manhole (m) | 0.760 | 1.382 |
| Distance (m) | 0.00 | 43.67 |

## Profile 03

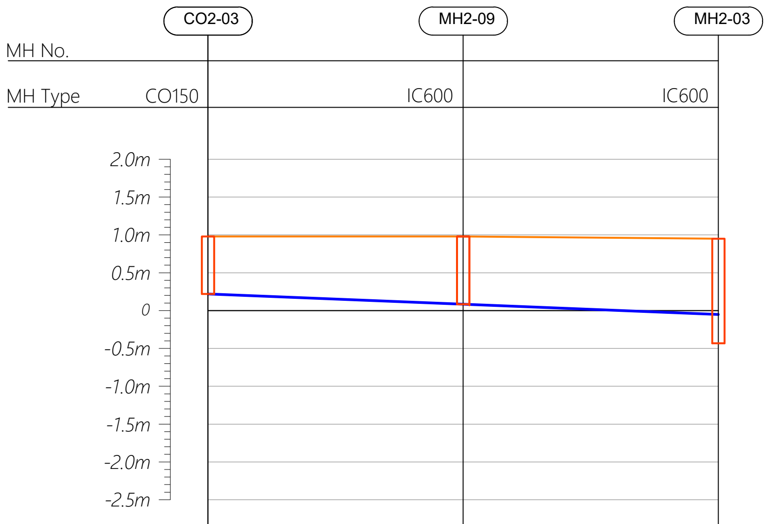

| MH No. | CO2-03 | MH2-09 | MH2-03 |
|---|---|---|---|
| MH Type | CO150 | IC600 | IC600 |
| Pipe Diameter (mm) | | Ø160 | Ø160 |
| Slope | | 1:250 | 1:250 |
| Ground level (msl) | 0.980 | 0.980 | 0.950 |
| Pipe Invert Level (msl) | 0.220 | 0.085 | -0.050 |
| Depth of Manhole (m) | 0.760 | 0.895 | 1.382 |
| Distance (m) | 0.00 | 33.76 | 33.76 |

## Profile 04

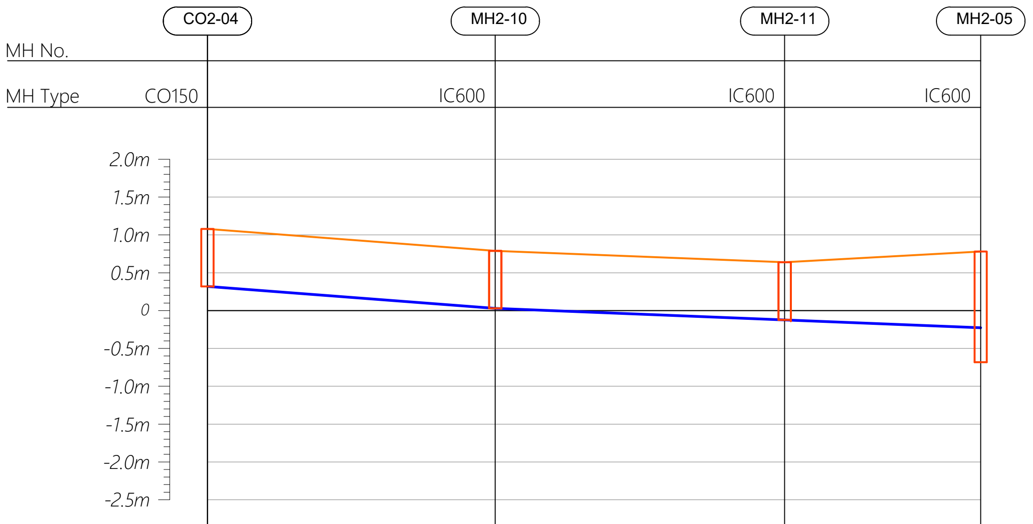

| MH No. | CO2-04 | MH2-10 | MH2-11 | MH2-05 |
|---|---|---|---|---|
| MH Type | CO150 | IC600 | IC600 | IC600 |
| Pipe Diameter (mm) | | Ø160 | Ø160 | Ø160 |
| Slope | | 1:131 | 1:250 | 1:250 |
| Ground level (msl) | 1.080 | 0.790 | 0.640 | 0.780 |
| Pipe Invert Level (msl) | 0.320 | 0.030 | -0.123 | -0.227 |
| Depth of Manhole (m) | 0.760 | 0.760 | 0.763 | 1.461 |
| Distance (m) | 0.00 | 38.05 | 38.27 | 25.92 |

HORIZONTAL SCALE 0 5 10 15 20 25m

VERTICAL SCALE 0 0.5 1.0 1.5 2.0 2.5m

CO160 — Cleanout ø160
IC600 — HDPE Manhole ø600
PS — Pump Station

| | | | | | |
|---|---|---|---|---|---|
| R00 | JUNE 2020 | STAGE -1 | PD | SBC | SD |
| REV. NO. | Date | Revision Description | Drawn | Chkd | Appd. |

Title:
*Consultancy Services for Survey, Design and EIA works of Water Supply and Sewerage Facilities in 5 islands, Maldives - Package 6*

Sub Title:
*Sewerage System in L.Kunahandhoo*

Client:
*Ministry of National Planning, Housing and Infrastructure, Republic of Maldives*

EPOCH ASSOCIATES
T: +960 333 3528
E: info@epoch.associates
W: www.epoch.associates
A: G. Rosary West,
Husnuheenaa Magu, Male', Maldives

FEEDBACK INFRA
Making Infrastructure Happen

Drawn: A.R.W
Checked: M.S.S
Designed: F.I.A
Approved: I.W
Date: Aug 2020
SCALE (A3): 1:100
Project No: 01010101
Rev: R-01
Page: PS2-02

## Profile 05

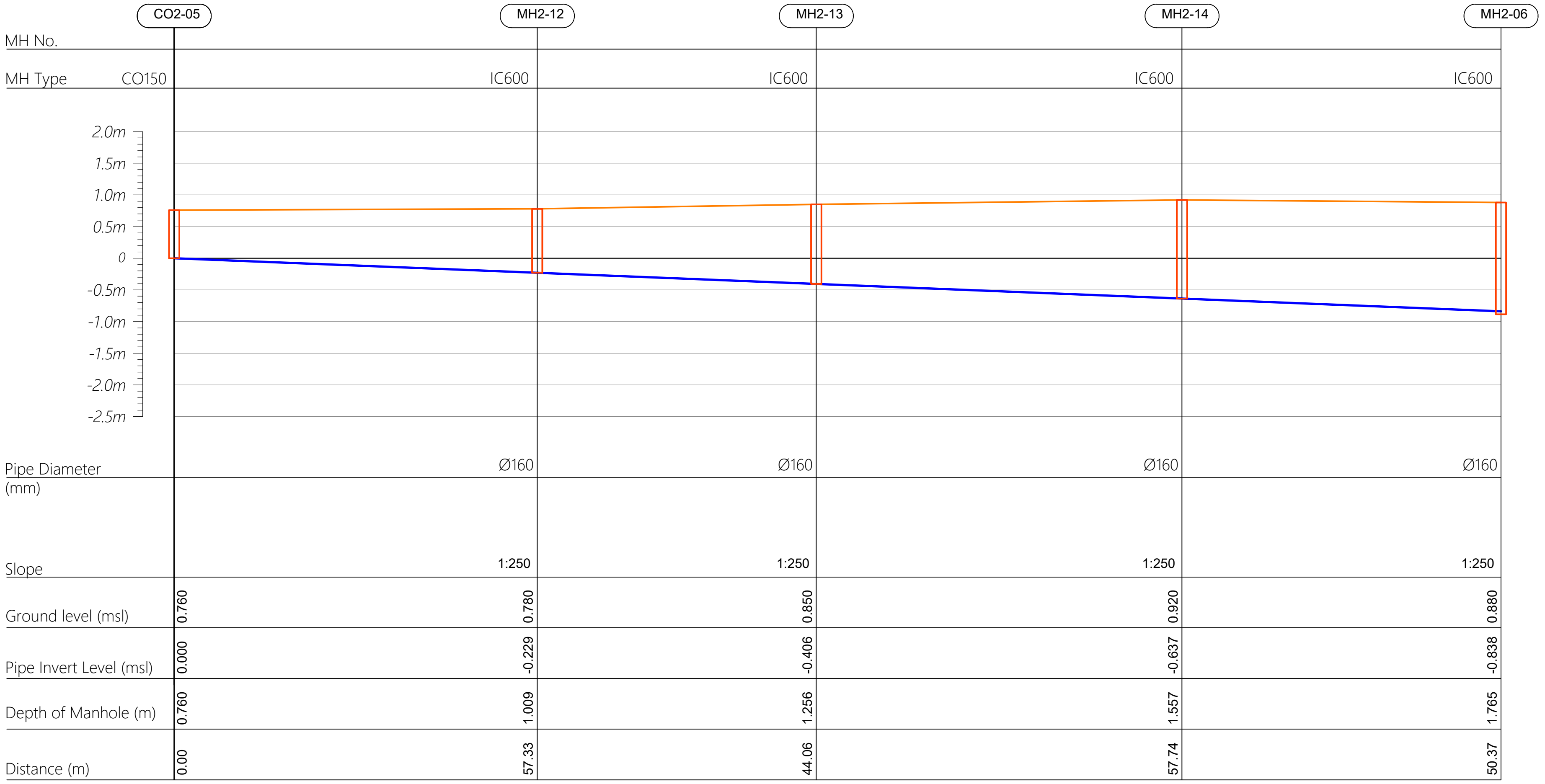

| MH No. | CO2-05 | MH2-12 | MH2-13 | MH2-14 | MH2-06 |
|---|---|---|---|---|---|
| MH Type | CO150 | IC600 | IC600 | IC600 | IC600 |
| Pipe Diameter (mm) | | Ø160 | Ø160 | Ø160 | Ø160 |
| Slope | | 1:250 | 1:250 | 1:250 | 1:250 |
| Ground level (msl) | 0.760 | 0.780 | 0.850 | 0.920 | 0.880 |
| Pipe Invert Level (msl) | 0.000 | -0.229 | -0.406 | -0.637 | -0.838 |
| Depth of Manhole (m) | 0.760 | 1.009 | 1.256 | 1.557 | 1.765 |
| Distance (m) | 0.00 | 57.33 | 44.06 | 57.74 | 50.37 |

## Profile 06

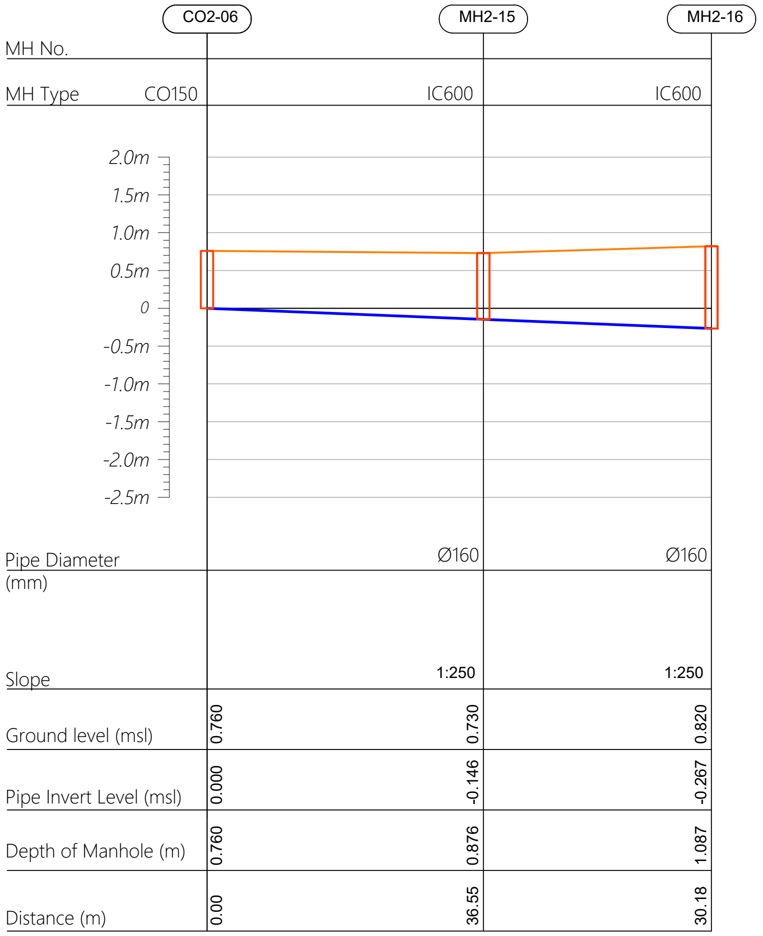

| MH No. | CO2-06 | MH2-15 | MH2-16 |
|---|---|---|---|
| MH Type | CO150 | IC600 | IC600 |
| Pipe Diameter (mm) | | Ø160 | Ø160 |
| Slope | | 1:250 | 1:250 |
| Ground level (msl) | 0.760 | 0.730 | 0.820 |
| Pipe Invert Level (msl) | 0.000 | -0.146 | -0.267 |
| Depth of Manhole (m) | 0.760 | 0.876 | 1.087 |
| Distance (m) | 0.00 | 36.55 | 30.18 |

HORIZONTAL SCALE 0 5 10 15 20 25m

VERTICAL SCALE 0 0.5 1.0 1.5 2.0 2.5m

CO160 — Cleanout ϕ160
IC600 — HDPE Manhole ϕ600
PS — Pump Station

| REV. NO. | Date | Revision Description | Drawn | Chkd | Appd. |
|---|---|---|---|---|---|
| R00 | JUNE 2020 | STAGE -1 | PD | SBC | SD |

Title:
*Consultancy Services for Survey, Design and EIA works of Water Supply and Sewerage Facilities in 5 islands, Maldives - Package 6*

Sub Title:
*Sewerage System in L.Kunahandhoo*

Client:
*Ministry of National Planning, Housing and Infrastructure, Republic of Maldives*

EPOCH ASSOCIATES
**T**: +960 333 3528
**E**: info@epoch.associates
**W**: www.epoch.associates
**A**: G. Rosary West, Husnuheenaa Magu, Male', Maldives

FEEDBACK INFRA
Making Infrastructure Happen

Drawn: A.R.W
Checked: M.S.S
Designed: F.I.A
Approved: I.W
Date: Aug 2020
SCALE (A3): 1:100
Project No: 01010101
Rev: R-01
Page: **PS2-03**

## Profile 06

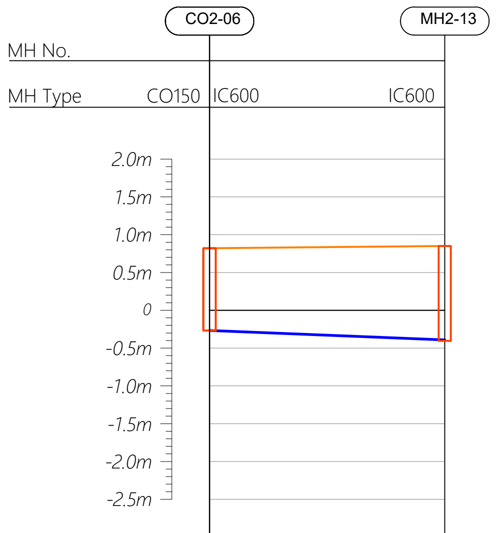
CO2-06
MH2-13
2.0m
1.5m
1.0m
0.5m
0
-0.5m
-1.0m
-1.5m
-2.0m
-2.5m

| MH No. | CO2-06 | MH2-13 |
|---|---|---|
| MH Type | CO150 IC600 | IC600 |
| Pipe Diameter (mm) | Ø160 | Ø160 |
| Slope | 1:250 | 1:250 |
| Ground level (msl) | 0.820 | 0.850 |
| Pipe Invert Level (msl) | -0.267 | -0.391 |
| Depth of Manhole (m) | 1.087 | 1.256 |
| Distance (m) | 30.18 | 31.08 |

## Profile 07

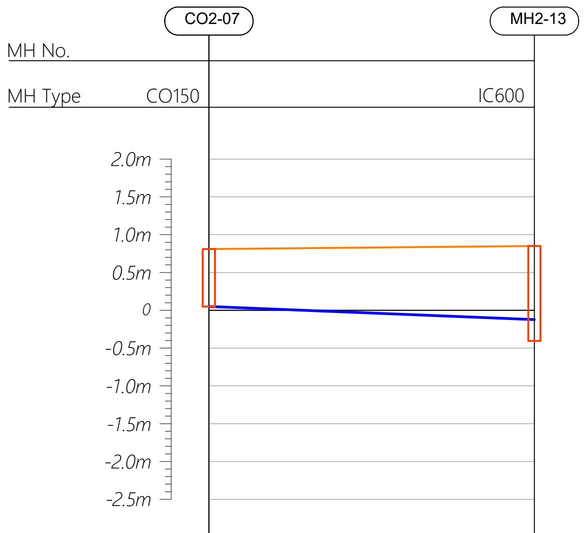
CO2-07
MH2-13
2.0m
1.5m
1.0m
0.5m
0
-0.5m
-1.0m
-1.5m
-2.0m
-2.5m

| MH No. | CO2-07 | MH2-13 |
|---|---|---|
| MH Type | CO150 | IC600 |
| Pipe Diameter (mm) | | Ø160 |
| Slope | | 1:250 |
| Ground level (msl) | 0.810 | 0.850 |
| Pipe Invert Level (msl) | 0.050 | -0.122 |
| Depth of Manhole (m) | 0.760 | 1.256 |
| Distance (m) | 0.00 | 43.06 |

## Profile 08

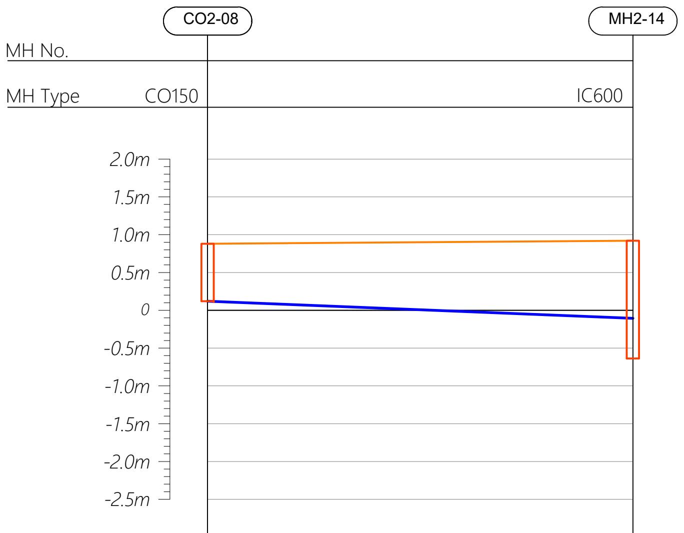
CO2-08
MH2-14
2.0m
1.5m
1.0m
0.5m
0
-0.5m
-1.0m
-1.5m
-2.0m
-2.5m

| MH No. | CO2-08 | MH2-14 |
|---|---|---|
| MH Type | CO150 | IC600 |
| Pipe Diameter (mm) | | Ø160 |
| Slope | | 1:250 |
| Ground level (msl) | 0.880 | 0.920 |
| Pipe Invert Level (msl) | 0.120 | -0.105 |
| Depth of Manhole (m) | 0.760 | 1.557 |
| Distance (m) | 0.00 | 56.27 |

## Profile 09

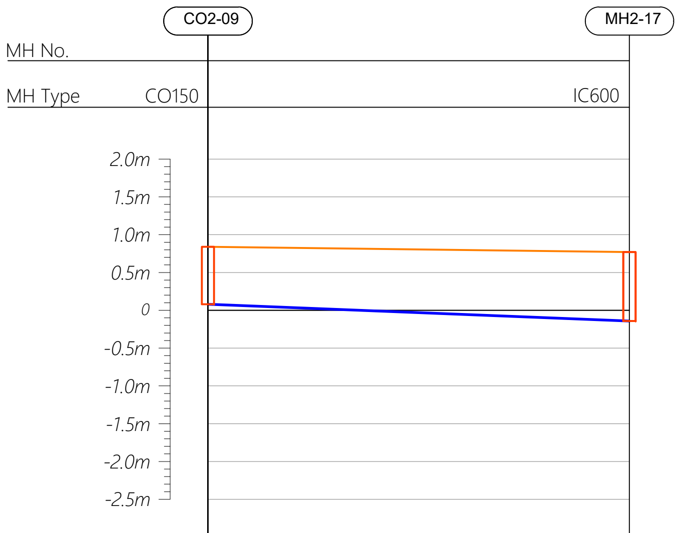
CO2-09
MH2-17
2.0m
1.5m
1.0m
0.5m
0
-0.5m
-1.0m
-1.5m
-2.0m
-2.5m

| MH No. | CO2-09 | MH2-17 |
|---|---|---|
| MH Type | CO150 | IC600 |
| Pipe Diameter (mm) | | Ø160 |
| Slope | | 1:250 |
| Ground level (msl) | 0.840 | 0.770 |
| Pipe Invert Level (msl) | 0.080 | -0.143 |
| Depth of Manhole (m) | 0.760 | 0.913 |
| Distance (m) | 0.00 | 55.72 |

HORIZONTAL SCALE 0 5 10 15 20 25m

VERTICAL SCALE 0 0.5 1.0 1.5 2.0 2.5m

CO160 — Cleanout ø160
IC600 — HDPE Manhole ø600
PS — Pump Station

| | | | | | |
|---|---|---|---|---|---|
| | | | | | |
| | | | | | |
| | | | | | |
| | | | | | |
| | | | | | |
| R00 | JUNE 2020 | STAGE -1 | PD | SBC | SD |
| REV. NO. | Date | Revision Description | Drawn | Chkd | Appd. |

Title:
*Consultancy Services for Survey, Design and EIA works of Water Supply and Sewerage Facilities in 5 islands, Maldives - Package 6*

Sub Title:
*Sewerage System in L.Kunahandhoo*

Client:
*Ministry of National Planning, Housing and Infrastructure, Republic of Maldives*

EPOCH ASSOCIATES
**T**: +960 333 3528
**E**: info@epoch.associates
**W**: wwww.epoch.associates
**A**: G. Rosary West,
Husnuheenaa Magu, Male', Maldives

FEEDBACK INFRA
Making Infrastructure Happen

Drawn: A.R.W
Checked: M.S.S
Designed: F.I.A
Approved: I.W
Date: Aug 2020
SCALE (A3): 1:100
Project No: 01010101
Rev: R-01
Page: **PS2-04**

## Profile 09

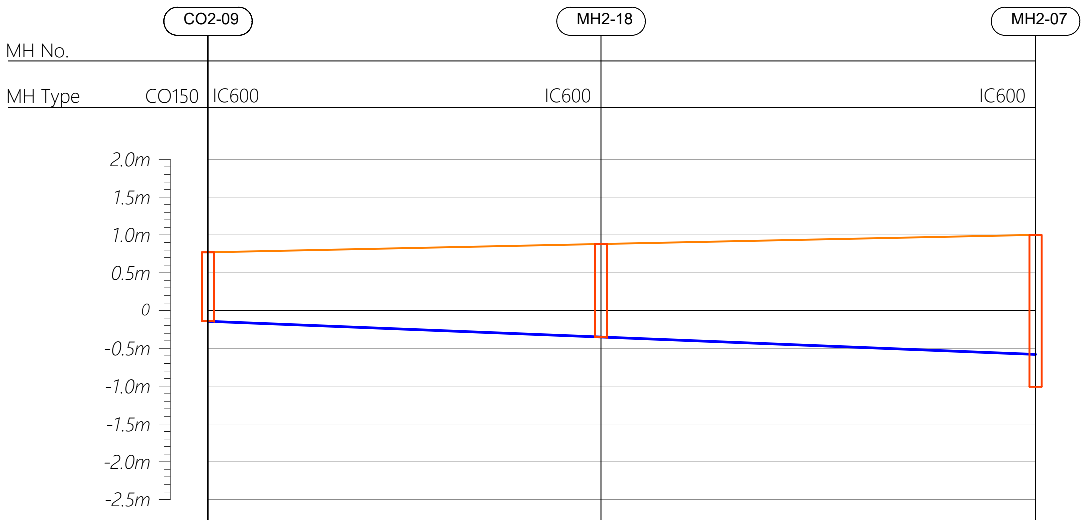

| MH No. | CO2-09 | MH2-18 | MH2-07 |
|---|---|---|---|
| MH Type | CO150 IC600 | IC600 | IC600 |
| Pipe Diameter (mm) | Ø160 | Ø160 | Ø160 |
| Slope | 1:250 | 1:250 | 1:250 |
| Ground level (msl) | 0.770 | 0.880 | 1.000 |
| Pipe Invert Level (msl) | -0.143 | -0.351 | -0.581 |
| Depth of Manhole (m) | 0.913 | 1.231 | 2.007 |
| Distance (m) | 55.72 | 52.00 | 57.49 |

## Profile 10

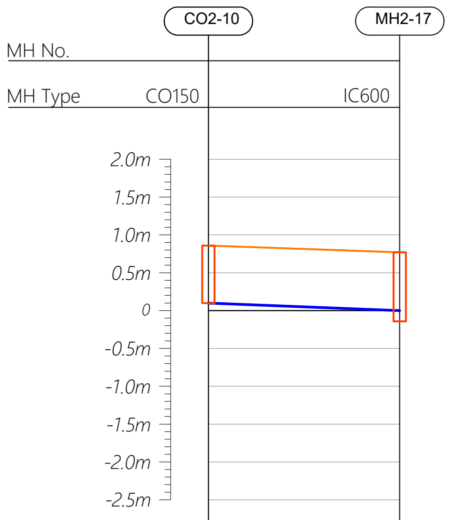

| MH No. | CO2-10 | MH2-17 |
|---|---|---|
| MH Type | CO150 | IC600 |
| Pipe Diameter (mm) | | Ø160 |
| Slope | | 1:250 |
| Ground level (msl) | 0.860 | 0.770 |
| Pipe Invert Level (msl) | 0.100 | -0.001 |
| Depth of Manhole (m) | 0.760 | 0.913 |
| Distance (m) | 0.00 | 25.31 |

## Profile 11

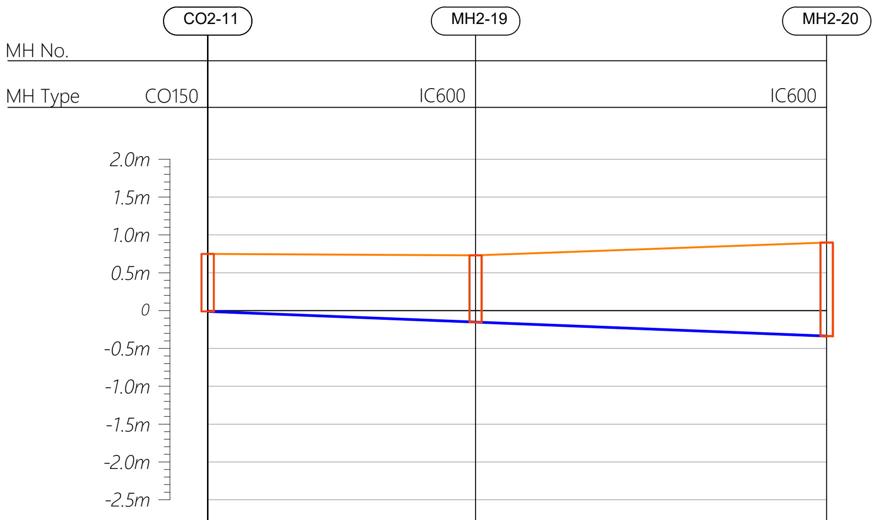

| MH No. | CO2-11 | MH2-19 | MH2-20 |
|---|---|---|---|
| MH Type | CO150 | IC600 | IC600 |
| Pipe Diameter (mm) | | Ø160 | Ø160 |
| Slope | | 1:250 | 1:250 |
| Ground level (msl) | 0.750 | 0.730 | 0.900 |
| Pipe Invert Level (msl) | -0.010 | -0.152 | -0.338 |
| Depth of Manhole (m) | 0.760 | 0.882 | 1.238 |
| Distance (m) | 0.00 | 35.44 | 46.45 |

HORIZONTAL SCALE 0 5 10 15 20 25m

VERTICAL SCALE 0 0.5 1.0 1.5 2.0 2.5m

CO160 — Cleanout ϕ160
IC600 — HDPE Manhole ϕ600
PS — Pump Station

| | | | | | |
|---|---|---|---|---|---|
| | | | | | |
| | | | | | |
| | | | | | |
| | | | | | |
| | | | | | |
| R00 | JUNE 2020 | STAGE -1 | PD | SBC | SD |
| REV. NO. | Date | Revision Description | Drawn | Chkd | Appd. |

Title:
*Consultancy Services for Survey, Design and EIA works of Water Supply and Sewerage Facilities in 5 islands, Maldives - Package 6*

Sub Title:
*Sewerage System in L.Kunahandhoo*

Client:
*Ministry of National Planning, Housing and Infrastructure, Republic of Maldives*

EPOCH ASSOCIATES
**T**: +960 333 3528
**E**: info@epoch.associates
**W**: wwww.epoch.associates
**A**: G. Rosary West,
Husnuheenaa Magu, Male', Maldives

FEEDBACK INFRA
Making Infrastructure Happen

| | | | |
|---|---|---|---|
| Drawn: | A.R.W | Checked: | M.S.S |
| Designed: | F.I.A | Approved: | I.W |
| Date: | Aug 2020 | SCALE (A3): | 1:100 |
| Project No: | 01010101 | | |
| Rev: | R-01 | Page: | PS2-05 |

## Profile 11

| MH No. | CO2-11 | MH2-21 | MH2-22 | MH2-23 | MH2-08 |
|---|---|---|---|---|---|
| MH Type | CO150 IC600 | IC600 | IC600 | IC600 | IC600 |

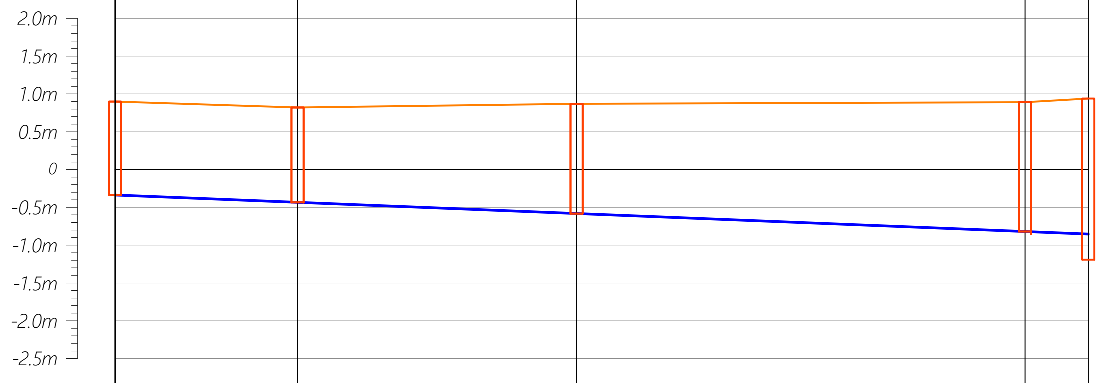

| | CO2-11 | MH2-21 | MH2-22 | MH2-23 | MH2-08 |
|---|---|---|---|---|---|
| Pipe Diameter (mm) | Ø160 | Ø160 | Ø160 | Ø160 | |
| Slope | 1:250 | 1:250 | 1:250 | 1:250 | 1:250 |
| Ground level (msl) | 0.900 | 0.820 | 0.870 | 0.890 | 0.940 |
| Pipe Invert Level (msl) | -0.338 | -0.434 | -0.582 | -0.819 | -0.853 |
| Depth of Manhole (m) | 1.238 | 1.254 | 1.452 | 1.709 | 2.132 |
| Distance (m) | 46.45 | 24.14 | 36.91 | 59.32 | 8.37 |

## Profile 12

| MH No. | CO2-12 | MH2-19 |
|---|---|---|
| MH Type | CO150 | IC600 |

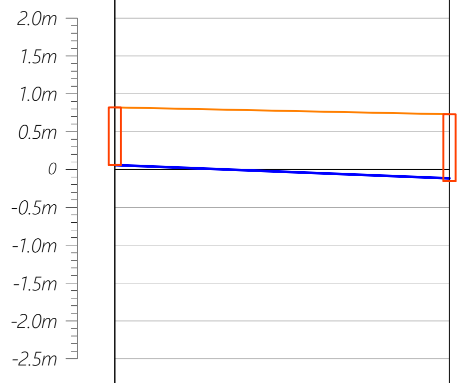

| | CO2-12 | MH2-19 |
|---|---|---|
| Pipe Diameter (mm) | | Ø160 |
| Slope | | 1:250 |
| Ground level (msl) | 0.820 | 0.730 |
| Pipe Invert Level (msl) | 0.060 | -0.117 |
| Depth of Manhole (m) | 0.760 | 0.882 |
| Distance (m) | 0.00 | 44.27 |

## Profile 13

| MH No. | CO2-13 | MH2-20 |
|---|---|---|
| MH Type | CO150 | IC600 |

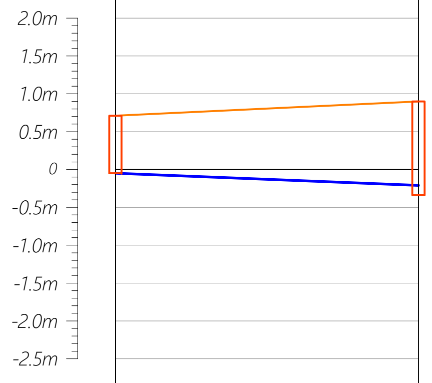

| | CO2-13 | MH2-20 |
|---|---|---|
| Pipe Diameter (mm) | | Ø160 |
| Slope | | 1:250 |
| Ground level (msl) | 0.710 | 0.900 |
| Pipe Invert Level (msl) | -0.050 | -0.210 |
| Depth of Manhole (m) | 0.760 | 1.238 |
| Distance (m) | 0.00 | 40.09 |

HORIZONTAL SCALE 0 5 10 15 20 25m

VERTICAL SCALE 0 0.5 1.0 1.5 2.0 2.5m

CO160 — Cleanout ø160
IC600 — HDPE Manhole ø600
PS — Pump Station

| | | | | | |
|---|---|---|---|---|---|
| | | | | | |
| | | | | | |
| | | | | | |
| | | | | | |
| | | | | | |
| R00 | JUNE 2020 | STAGE -1 | PD | SBC | SD |
| REV. NO. | Date | Revision Description | Drawn | Chkd | Appd. |

Title:
*Consultancy Services for Survey, Design and EIA works of Water Supply and Sewerage Facilities in 5 islands, Maldives - Package 6*

Sub Title:
*Sewerage System in L.Kunahandhoo*

Client:
*Ministry of National Planning, Housing and Infrastructure, Republic of Maldives*

EPOCH ASSOCIATES
**T**: +960 333 3528
**E**: info@epoch.associates
**W**: wwww.epoch.associates
**A**: G. Rosary West,
Husnuheenaa Magu, Male', Maldives

FEEDBACK INFRA
Making Infrastructure Happen

Drawn: A.R.W
Checked: M.S.S
Designed: F.I.A
Approved: I.W
Date: Aug 2020
SCALE (A3): 1:100
Project No: 01010101
Rev: *R-01*
Page: ***PS2-06***

## Profile 14

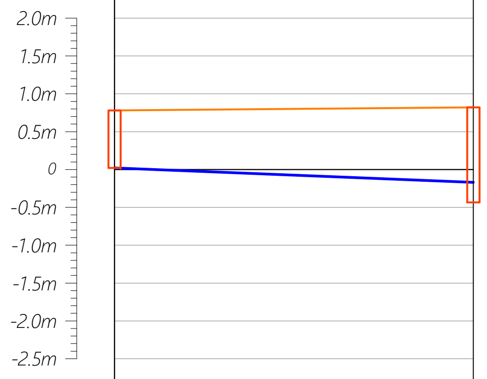

| | | |
|---|---|---|
| MH No. | CO2-14 | MH2-21 |
| MH Type | CO150 | IC600 |
| Pipe Diameter (mm) | | Ø160 |
| Slope | | 1:250 |
| Ground level (msl) | 0.780 | 0.820 |
| Pipe Invert Level (msl) | 0.020 | -0.170 |
| Depth of Manhole (m) | 0.760 | 1.254 |
| Distance (m) | 0.00 | 47.42 |

## Profile 15

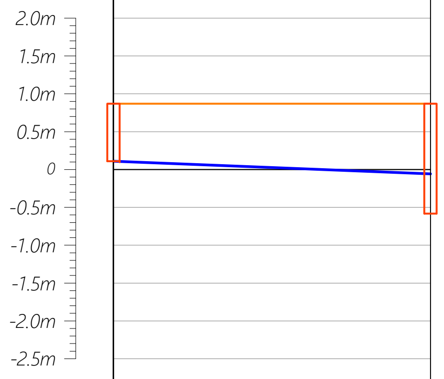

| | | |
|---|---|---|
| MH No. | CO2-15 | MH2-22 |
| MH Type | CO150 | IC600 |
| Pipe Diameter (mm) | | Ø160 |
| Slope | | 1:250 |
| Ground level (msl) | 0.870 | 0.870 |
| Pipe Invert Level (msl) | 0.110 | -0.058 |
| Depth of Manhole (m) | 0.760 | 1.452 |
| Distance (m) | 0.00 | 41.89 |

## Profile 16

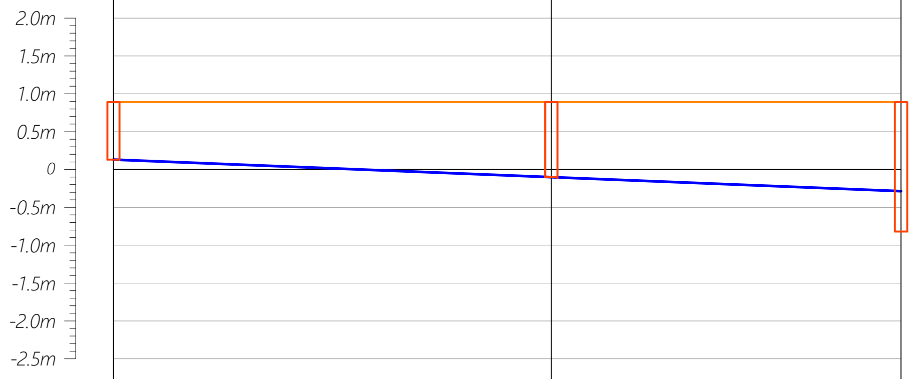

| | | | |
|---|---|---|---|
| MH No. | CO2-16 | MH2-24 | MH2-23 |
| MH Type | CO150 | IC600 | IC600 |
| Pipe Diameter (mm) | | Ø160 | Ø160 |
| Slope | | 1:250 | 1:250 |
| Ground level (msl) | 0.890 | 0.890 | 0.890 |
| Pipe Invert Level (msl) | 0.130 | -0.102 | -0.287 |
| Depth of Manhole (m) | 0.760 | 0.992 | 1.709 |
| Distance (m) | 0.00 | 57.93 | 46.26 |

HORIZONTAL SCALE 0 5 10 15 20 25m

VERTICAL SCALE 0 0.5 1.0 1.5 2.0 2.5m

CO160 — Cleanout ϕ160
IC600 — HDPE Manhole ϕ600
PS — Pump Station

| | | | | | |
|---|---|---|---|---|---|
| R00 | JUNE 2020 | STAGE -1 | PD | SBC | SD |
| REV. NO. | Date | Revision Description | Drawn | Chkd | Appd. |

Title:
*Consultancy Services for Survey, Design and EIA works of Water Supply and Sewerage Facilities in 5 islands, Maldives - Package 6*

Sub Title:
*Sewerage System in L.Kunahandhoo*

Client:
*Ministry of National Planning, Housing and Infrastructure, Republic of Maldives*

EPOCH ASSOCIATES
**T**: +960 333 3528
**E**: info@epoch.associates
**W**: wwww.epoch.associates
**A**: G. Rosary West,
Husnuheenaa Magu, Male', Maldives

FEEDBACK INFRA
Making Infrastructure Happen

Drawn: A.R.W
Checked: M.S.S
Designed: F.I.A
Approved: I.W
Date: Aug 2020
SCALE (A3): 1:100
Project No: 01010101
Rev: *R-01*
Page: ***PS2-07***

# Profile 17

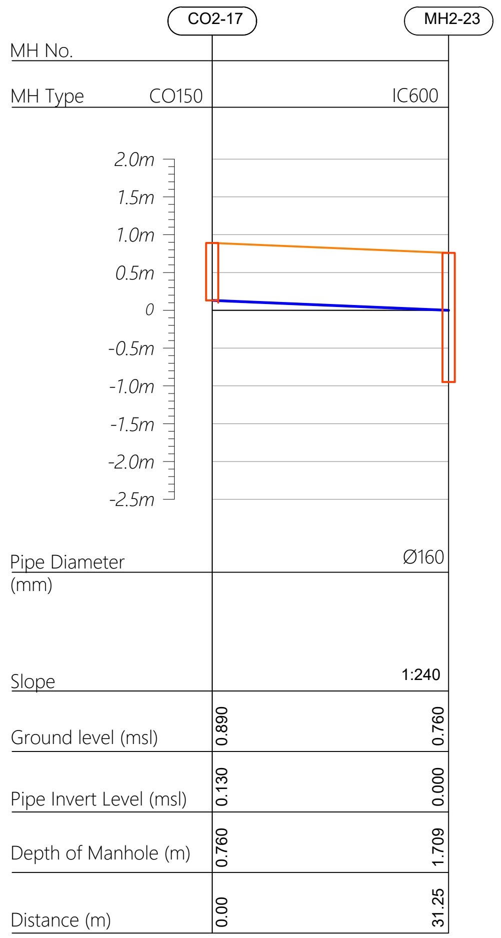

| | CO2-17 | MH2-23 |
|---|---|---|
| MH No. | CO2-17 | MH2-23 |
| MH Type | CO150 | IC600 |
| Pipe Diameter (mm) | | Ø160 |
| Slope | | 1:240 |
| Ground level (msl) | 0.890 | 0.760 |
| Pipe Invert Level (msl) | 0.130 | 0.000 |
| Depth of Manhole (m) | 0.760 | 1.709 |
| Distance (m) | 0.00 | 31.25 |

HORIZONTAL SCALE 0 5 10 15 20 25m

VERTICAL SCALE 0 0.5 1.0 1.5 2.0 2.5m

CO160 — Cleanout ø160
IC600 — HDPE Manhole ø600
PS — Pump Station

| | | | | | |
|---|---|---|---|---|---|
| | | | | | |
| | | | | | |
| | | | | | |
| | | | | | |
| | | | | | |
| R00 | JUNE 2020 | STAGE -1 | PD | SBC | SD |
| REV. NO. | Date | Revision Description | Drawn | Chkd | Appd. |

Title:
*Consultancy Services for Survey, Design and EIA works of Water Supply and Sewerage Facilities in 5 islands, Maldives - Package 6*

Sub Title:
*Sewerage System in L.Kunahandhoo*

Client:
*Ministry of National Planning, Housing and Infrastructure, Republic of Maldives*

EPOCH
ASSOCIATES

**T**: +960 333 3528
**E**: info@epoch.associates
**W**: wwww.epoch.associates
**A**: G. Rosary West,
Husnuheenaa Magu, Male', Maldives

FEEDBACK INFRA
Making Infrastructure Happen

| | | | |
|---|---|---|---|
| Drawn: | A.R.W | Checked: | M.S.S |
| Designed: | F.I.A | Approved: | I.W |
| Date: | Aug 2020 | SCALE (A3): | 1:100 |
| Project No: | 01010101 | | |
| Rev: | R-01 | Page: | PS2-08 |

# Profile 01

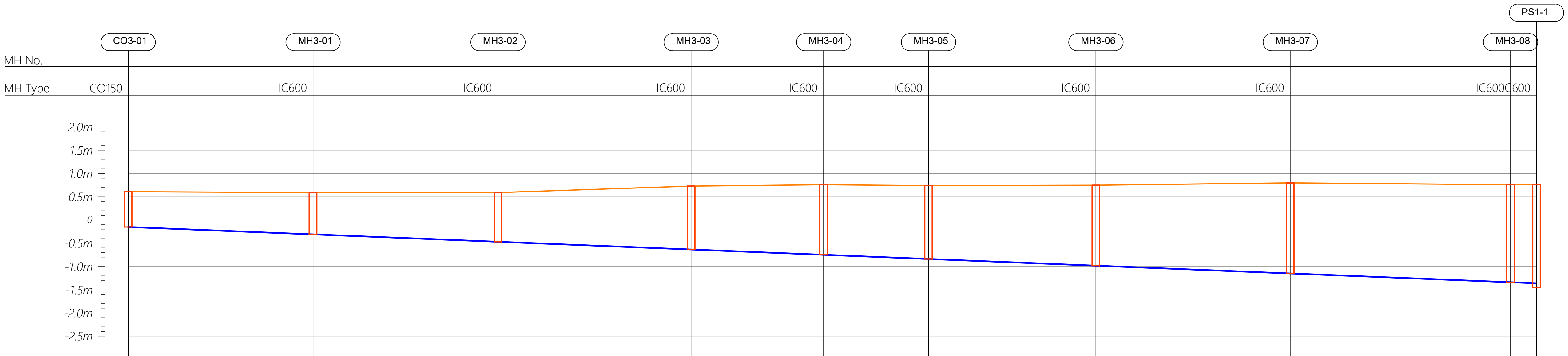

| | | | | | | | | | | |
|---|---|---|---|---|---|---|---|---|---|---|
| MH No. | CO3-01 | MH3-01 | MH3-02 | MH3-03 | MH3-04 | MH3-05 | MH3-06 | MH3-07 | MH3-08 | PS1-1 |
| MH Type | CO150 | IC600 | IC600 | IC600 | IC600 | IC600 | IC600 | IC600 | IC600 | IC600 |
| Pipe Diameter (mm) | | Ø160 | Ø160 | Ø160 | Ø160 | Ø160 | Ø160 | Ø160 | Ø160 | |
| Slope | | 1:250 | 1:250 | 1:250 | 1:250 | 1:250 | 1:250 | 1:250 | 1:250 | 1:250 |
| Ground level (msl) | 0.610 | 0.590 | 0.590 | 0.730 | 0.760 | 0.740 | 0.750 | 0.800 | 0.760 | 0.760 |
| Pipe Invert Level (msl) | -0.150 | -0.309 | -0.468 | -0.634 | -0.748 | -0.839 | -0.983 | -1.150 | -1.339 | -1.362 |
| Depth of Manhole (m) | 0.760 | 0.899 | 1.058 | 1.364 | 1.508 | 1.579 | 1.733 | 1.950 | 2.099 | 2.213 |
| Distance (m) | 0.00 | 39.78 | 39.78 | 41.53 | 28.51 | 22.56 | 36.00 | 41.81 | 47.37 | 5.59 |

HORIZONTAL SCALE 0 5 10 15 20 25m

VERTICAL SCALE 0 0.5 1.0 1.5 2.0 2.5m

CO160 — Cleanout ø160
IC600 — HDPE Manhole ø600
PS — Pump Station

| REV. NO. | Date | Revision Description | Drawn | Chkd | Appd. |
|---|---|---|---|---|---|
| R00 | JUNE 2020 | STAGE -1 | PD | SBC | SD |

Title:
*Consultancy Services for Survey, Design and EIA works of Water Supply and Sewerage Facilities in 5 islands, Maldives - Package 6*

Sub Title:
*Sewerage System in L.Kunahandhoo*

Client:
*Ministry of National Planning, Housing and Infrastructure, Republic of Maldives*

EPOCH ASSOCIATES
**T**: +960 333 3528
**E**: info@epoch.associates
**W**: www.epoch.associates
**A**: G. Rosary West, Husnuheenaa Magu, Male', Maldives

FEEDBACK INFRA
Making Infrastructure Happen

Drawn: A.R.W
Checked: M.S.S
Designed: F.I.A
Approved: I.W
Date: Aug 2020
SCALE (A3): 1:100
Project No: 01010101
Rev: R-01
Page: PS3-01

## Profile 02

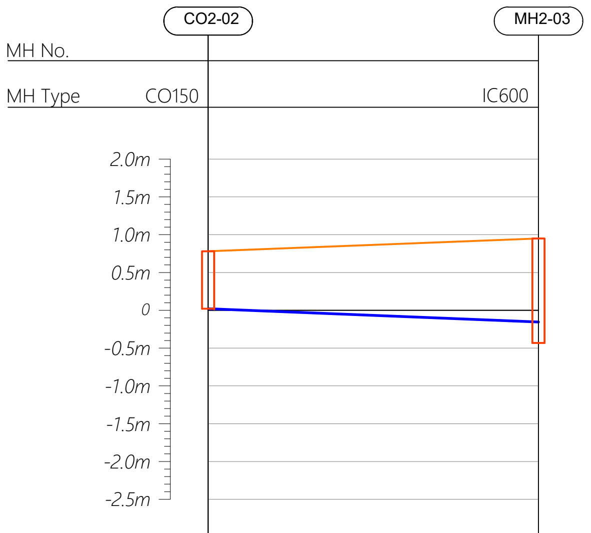
2.0m
1.5m
1.0m
0.5m
0
-0.5m
-1.0m
-1.5m
-2.0m
-2.5m

| | | |
|---|---|---|
| MH No. | CO2-02 | MH2-03 |
| MH Type | CO150 | IC600 |
| Pipe Diameter (mm) | | Ø160 |
| Slope | | 1:250 |
| Ground level (msl) | 0.780 | 0.950 |
| Pipe Invert Level (msl) | 0.020 | -0.155 |
| Depth of Manhole (m) | 0.760 | 1.382 |
| Distance (m) | 0.00 | 43.67 |

## Profile 03

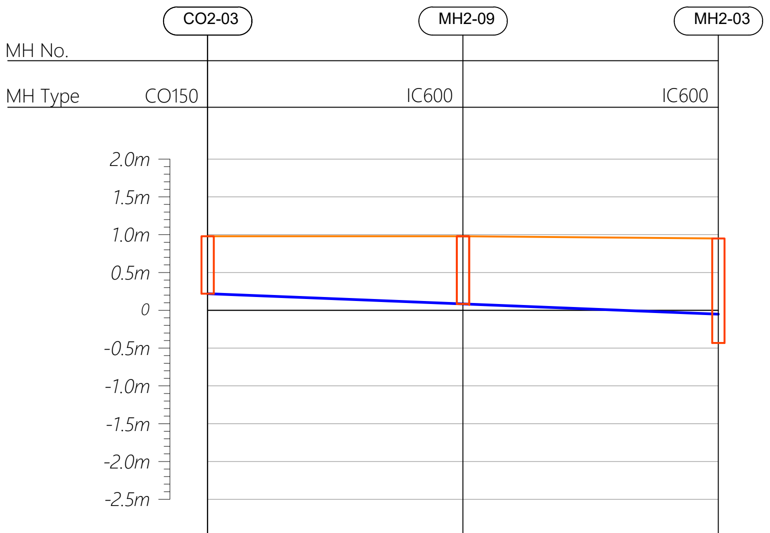
2.0m
1.5m
1.0m
0.5m
0
-0.5m
-1.0m
-1.5m
-2.0m
-2.5m

| | | | |
|---|---|---|---|
| MH No. | CO2-03 | MH2-09 | MH2-03 |
| MH Type | CO150 | IC600 | IC600 |
| Pipe Diameter (mm) | | Ø160 | Ø160 |
| Slope | | 1:250 | 1:250 |
| Ground level (msl) | 0.980 | 0.980 | 0.950 |
| Pipe Invert Level (msl) | 0.220 | 0.085 | -0.050 |
| Depth of Manhole (m) | 0.760 | 0.895 | 1.382 |
| Distance (m) | 0.00 | 33.76 | 33.76 |

## Profile 04

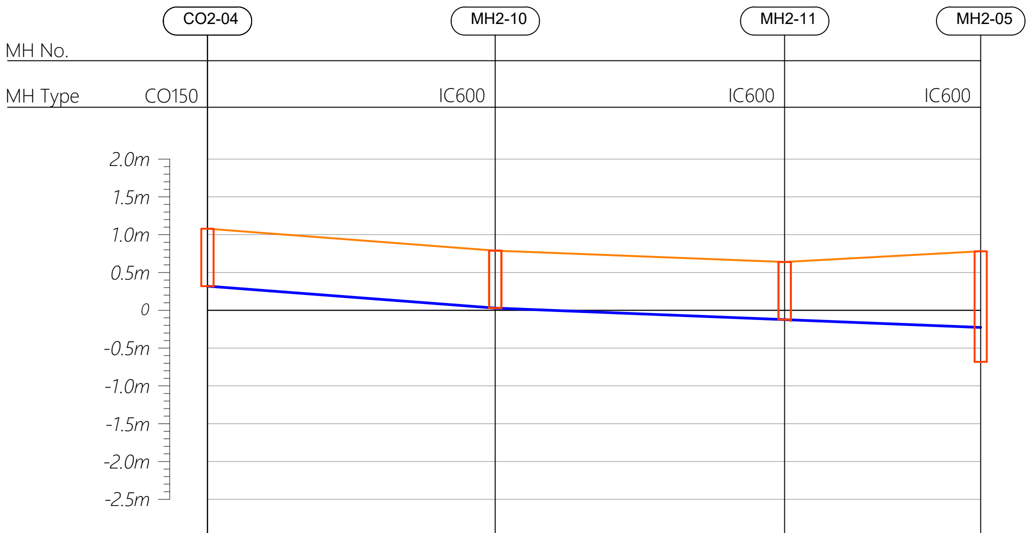
2.0m
1.5m
1.0m
0.5m
0
-0.5m
-1.0m
-1.5m
-2.0m
-2.5m

| | | | | |
|---|---|---|---|---|
| MH No. | CO2-04 | MH2-10 | MH2-11 | MH2-05 |
| MH Type | CO150 | IC600 | IC600 | IC600 |
| Pipe Diameter (mm) | | Ø160 | Ø160 | Ø160 |
| Slope | | 1:131 | 1:250 | 1:250 |
| Ground level (msl) | 1.080 | 0.790 | 0.640 | 0.780 |
| Pipe Invert Level (msl) | 0.320 | 0.030 | -0.123 | -0.227 |
| Depth of Manhole (m) | 0.760 | 0.760 | 0.763 | 1.461 |
| Distance (m) | 0.00 | 38.05 | 38.27 | 25.92 |

HORIZONTAL SCALE
0 5 10 15 20 25m
VERTICAL SCALE
0 0.5 1.0 1.5 2.0 2.5m

CO160 — Cleanout ϕ160
IC600 — HDPE Manhole ϕ600
PS — Pump Station

| | | | | | |
|---|---|---|---|---|---|
| | | | | | |
| | | | | | |
| | | | | | |
| | | | | | |
| | | | | | |
| R00 | JUNE 2020 | STAGE -1 | PD | SBC | SD |
| REV. NO. | Date | Revision Description | Drawn | Chkd | Appd. |

Title:
*Consultancy Services for Survey, Design and EIA works of Water Supply and Sewerage Facilities in 5 islands, Maldives - Package 6*

Sub Title:
*Sewerage System in L.Kunahandhoo*

Client:
*Ministry of National Planning, Housing and Infrastructure, Republic of Maldives*

EPOCH ASSOCIATES
**T**: +960 333 3528
**E**: info@epoch.associates
**W**: wwww.epoch.associates
**A**: G. Rosary West,
Husnuheenaa Magu, Male', Maldives

FEEDBACK INFRA
Making Infrastructure Happen

| | | | |
|---|---|---|---|
| Drawn: | A.R.W | Checked: | M.S.S |
| Designed: | F.I.A | Approved: | I.W |
| Date: | Aug 2020 | SCALE (A3): | 1:100 |
| Project No: | 01010101 | | |
| Rev: | *R-01* | Page: | *PS3-02* |

## Profile 04

| MH No. | CO3-04 | MH3-11 |
|---|---|---|
| MH Type | CO150 | IC600 |

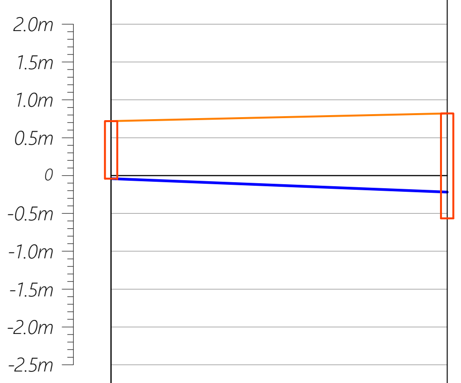

| | CO3-04 | MH3-11 |
|---|---|---|
| Pipe Diameter (mm) | | Ø160 |
| Slope | | 1:250 |
| Ground level (msl) | 0.720 | 0.820 |
| Pipe Invert Level (msl) | -0.040 | -0.218 |
| Depth of Manhole (m) | 0.760 | 1.385 |
| Distance (m) | 0.00 | 44.41 |

## Profile 05

| MH No. | CO3-05 | MH3-15 | MH3-16 | MH3-17 | MH3-18 | MH3-13 |
|---|---|---|---|---|---|---|
| MH Type | CO150 | IC600 | IC600 | IC600 | IC600 | IC600 |

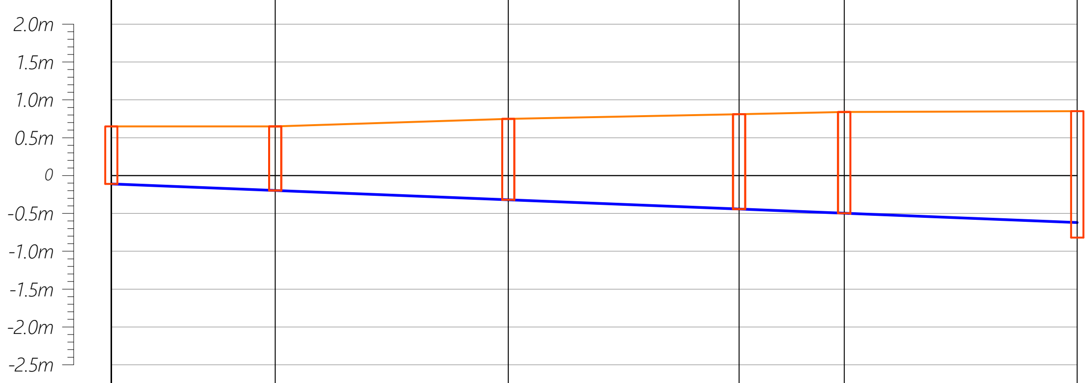

| | CO3-05 | MH3-15 | MH3-16 | MH3-17 | MH3-18 | MH3-13 |
|---|---|---|---|---|---|---|
| Pipe Diameter (mm) | | Ø160 | Ø160 | Ø160 | Ø160 | Ø160 |
| Slope | | 1:250 | 1:250 | 1:250 | 1:250 | 1:250 |
| Ground level (msl) | 0.650 | 0.650 | 0.750 | 0.810 | 0.840 | 0.850 |
| Pipe Invert Level (msl) | -0.110 | -0.197 | -0.320 | -0.442 | -0.498 | -0.621 |
| Depth of Manhole (m) | 0.760 | 0.847 | 1.070 | 1.252 | 1.338 | 1.669 |
| Distance (m) | 0.00 | 21.67 | 30.82 | 30.52 | 13.90 | 30.81 |

## Profile 06

| MH No. | CO3-06 | MH3-17 |
|---|---|---|
| MH Type | CO150 | IC600 |

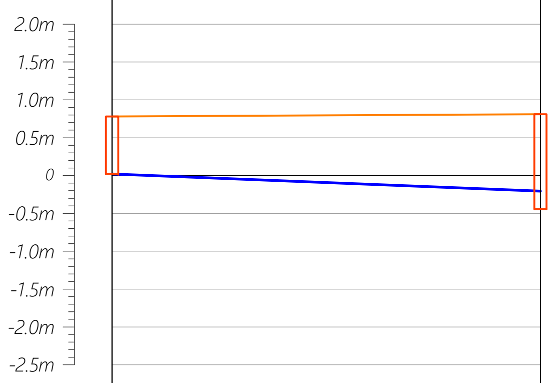

| | CO3-06 | MH3-17 |
|---|---|---|
| Pipe Diameter (mm) | | Ø160 |
| Slope | | 1:250 |
| Ground level (msl) | 0.780 | 0.810 |
| Pipe Invert Level (msl) | 0.020 | -0.206 |
| Depth of Manhole (m) | 0.760 | 1.252 |
| Distance (m) | 0.00 | 56.61 |

HORIZONTAL SCALE 0 5 10 15 20 25m

VERTICAL SCALE 0 0.5 1.0 1.5 2.0 2.5m

CO160 — Cleanout ø160
IC600 — HDPE Manhole ø600
PS — Pump Station

| | | | | | |
|---|---|---|---|---|---|
| | | | | | |
| | | | | | |
| | | | | | |
| | | | | | |
| | | | | | |
| R00 | JUNE 2020 | STAGE -1 | PD | SBC | SD |
| REV. NO. | Date | Revision Description | Drawn | Chkd | Appd. |

Title:
*Consultancy Services for Survey, Design and EIA works of Water Supply and Sewerage Facilities in 5 islands, Maldives - Package 6*

Sub Title:
*Sewerage System in L.Kunahandhoo*

Client:
*Ministry of National Planning, Housing and Infrastructure, Republic of Maldives*

EPOCH ASSOCIATES
**T**: +960 333 3528
**E**: info@epoch.associates
**W**: wwww.epoch.associates
**A**: G. Rosary West,
Husnuheenaa Magu, Male', Maldives

FEEDBACK INFRA
Making Infrastructure Happen

Drawn: A.R.W
Checked: M.S.S
Designed: F.I.A
Approved: I.W
Date: Aug 2020
SCALE (A3): 1:100
Project No: 01010101
Rev: *R-01*
Page: ***PS3-03***

## Profile 07

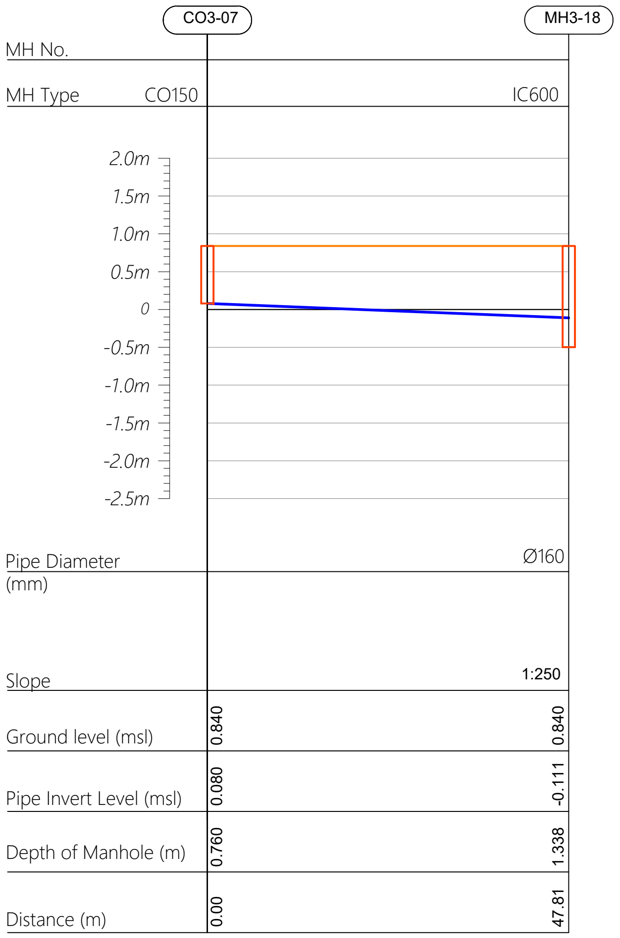

| MH No. | CO3-07 | MH3-18 |
|---|---|---|
| MH Type | CO150 | IC600 |
| Pipe Diameter (mm) | | Ø160 |
| Slope | | 1:250 |
| Ground level (msl) | 0.840 | 0.840 |
| Pipe Invert Level (msl) | 0.080 | -0.111 |
| Depth of Manhole (m) | 0.760 | 1.338 |
| Distance (m) | 0.00 | 47.81 |

## Profile 08

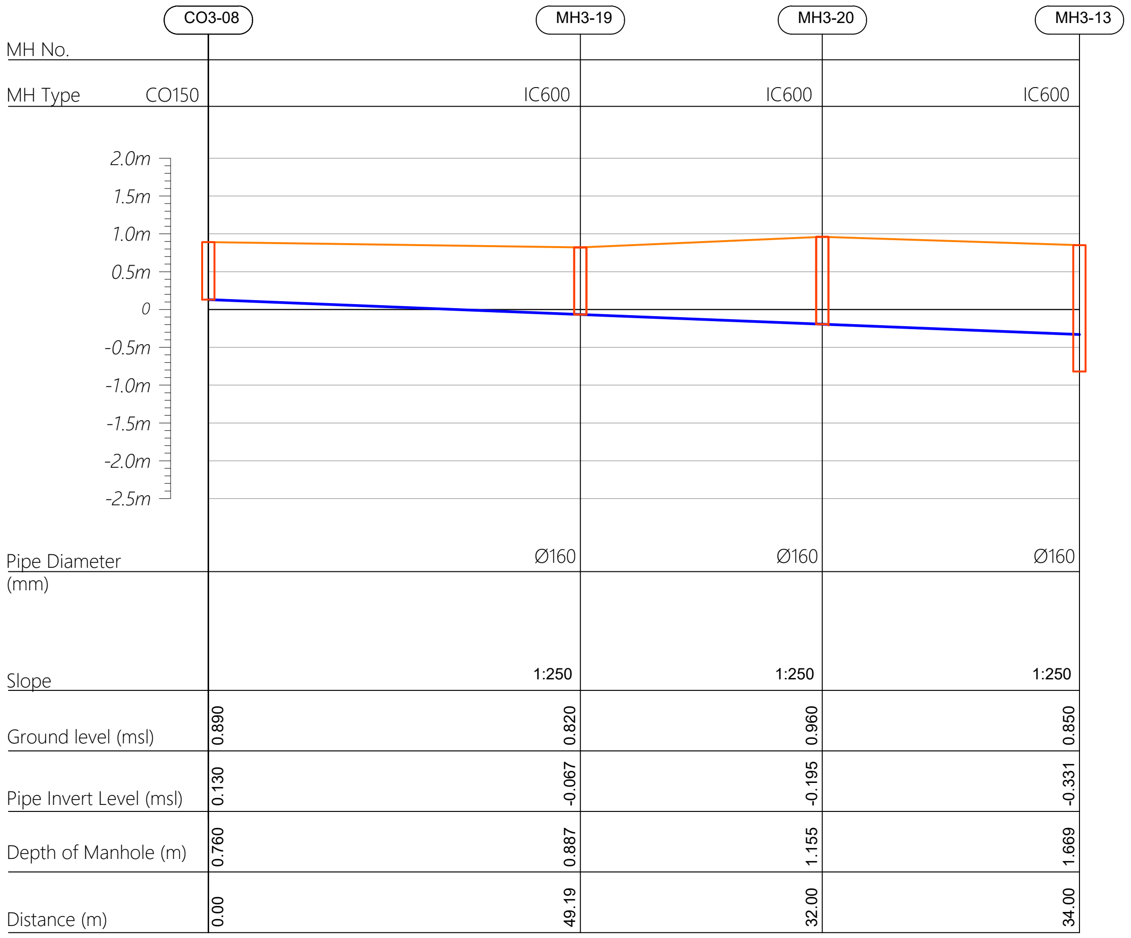

| MH No. | CO3-08 | MH3-19 | MH3-20 | MH3-13 |
|---|---|---|---|---|
| MH Type | CO150 | IC600 | IC600 | IC600 |
| Pipe Diameter (mm) | | Ø160 | Ø160 | Ø160 |
| Slope | | 1:250 | 1:250 | 1:250 |
| Ground level (msl) | 0.890 | 0.820 | 0.960 | 0.850 |
| Pipe Invert Level (msl) | 0.130 | -0.067 | -0.195 | -0.331 |
| Depth of Manhole (m) | 0.760 | 0.887 | 1.155 | 1.669 |
| Distance (m) | 0.00 | 49.19 | 32.00 | 34.00 |

## Profile 09

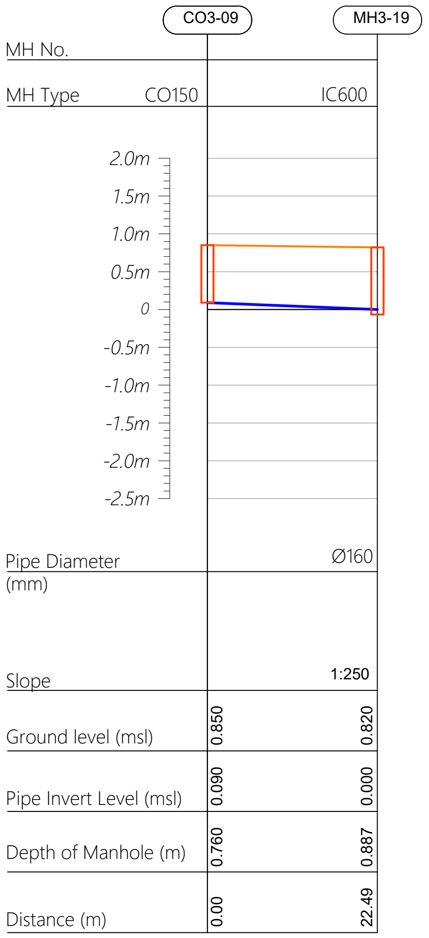

| MH No. | CO3-09 | MH3-19 |
|---|---|---|
| MH Type | CO150 | IC600 |
| Pipe Diameter (mm) | | Ø160 |
| Slope | | 1:250 |
| Ground level (msl) | 0.850 | 0.820 |
| Pipe Invert Level (msl) | 0.090 | 0.000 |
| Depth of Manhole (m) | 0.760 | 0.887 |
| Distance (m) | 0.00 | 22.49 |

HORIZONTAL SCALE 0 5 10 15 20 25m

VERTICAL SCALE 0 0.5 1.0 1.5 2.0 2.5m

CO160 — Cleanout ø160
IC600 — HDPE Manhole ø600
PS — Pump Station

| | | | | | |
|---|---|---|---|---|---|
| | | | | | |
| | | | | | |
| | | | | | |
| | | | | | |
| | | | | | |
| R00 | JUNE 2020 | STAGE -1 | PD | SBC | SD |
| REV. NO. | Date | Revision Description | Drawn | Chkd | Appd. |

Title:
*Consultancy Services for Survey, Design and EIA works of Water Supply and Sewerage Facilities in 5 islands, Maldives - Package 6*

Sub Title:
*Sewerage System in L.Kunahandhoo*

Client:
*Ministry of National Planning, Housing and Infrastructure, Republic of Maldives*

EPOCH ASSOCIATES
**T**: +960 333 3528
**E**: info@epoch.associates
**W**: wwww.epoch.associates
**A**: G. Rosary West,
Husnuheenaa Magu, Male', Maldives

FEEDBACK INFRA
Making Infrastructure Happen

Drawn: A.R.W
Checked: M.S.S
Designed: F.I.A
Approved: I.W
Date: Aug 2020
SCALE (A3): 1:100
Project No: 01010101
Rev: *R-01*
Page: ***PS3-04***

# Profile 10

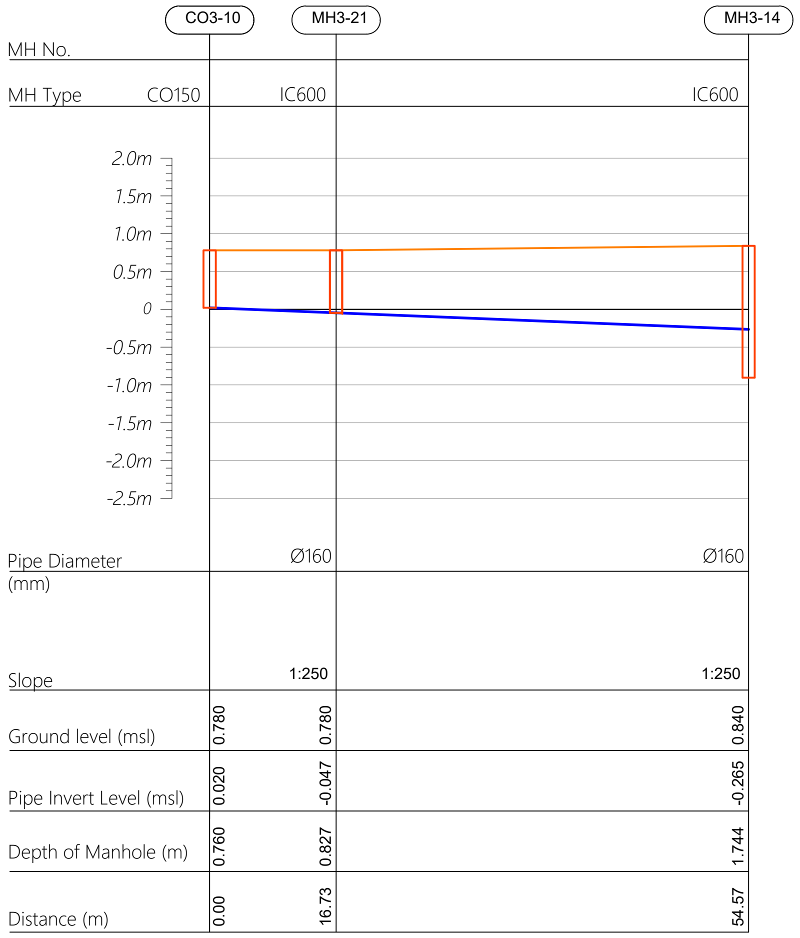

| MH No. | CO3-10 | MH3-21 | MH3-14 |
|---|---|---|---|
| MH Type | CO150 | IC600 | IC600 |
| Pipe Diameter (mm) | | Ø160 | Ø160 |
| Slope | | 1:250 | 1:250 |
| Ground level (msl) | 0.780 | 0.780 | 0.840 |
| Pipe Invert Level (msl) | 0.020 | -0.047 | -0.265 |
| Depth of Manhole (m) | 0.760 | 0.827 | 1.744 |
| Distance (m) | 0.00 | 16.73 | 54.57 |

# Profile 11

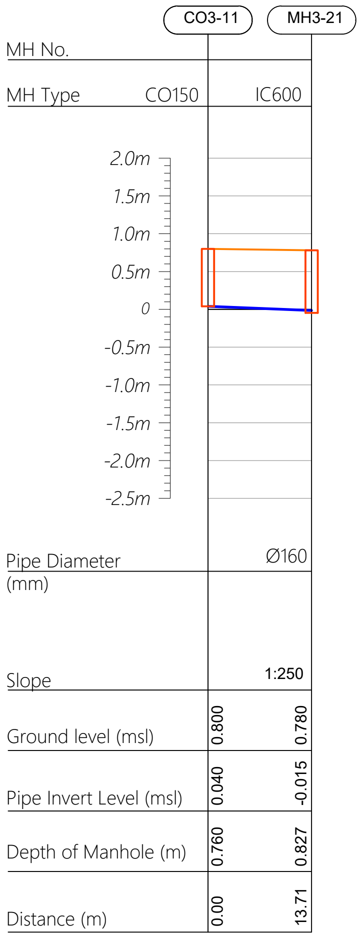

| MH No. | CO3-11 | MH3-21 |
|---|---|---|
| MH Type | CO150 | IC600 |
| Pipe Diameter (mm) | | Ø160 |
| Slope | | 1:250 |
| Ground level (msl) | 0.800 | 0.780 |
| Pipe Invert Level (msl) | 0.040 | -0.015 |
| Depth of Manhole (m) | 0.760 | 0.827 |
| Distance (m) | 0.00 | 13.71 |

# Profile 12

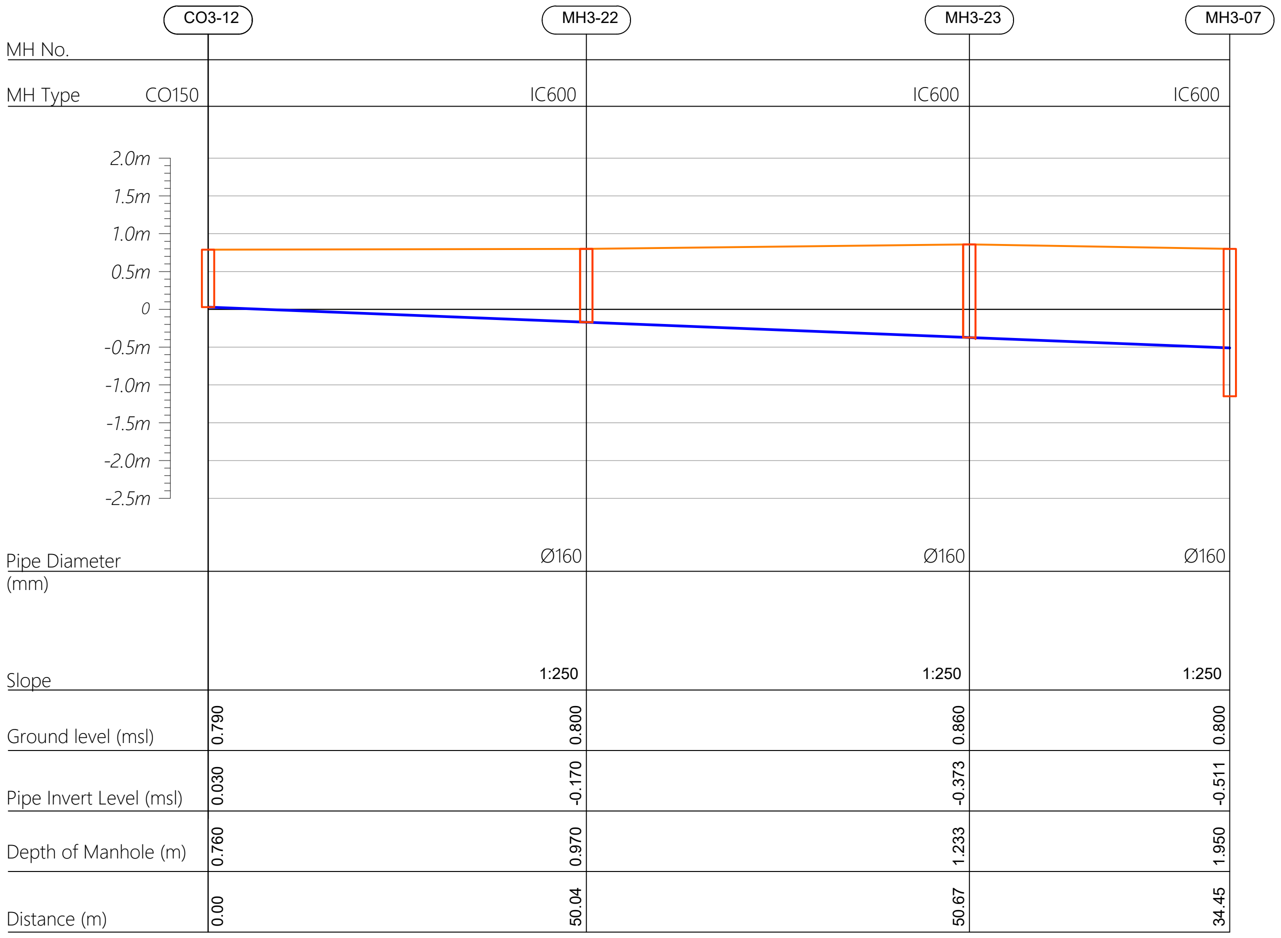

| MH No. | CO3-12 | MH3-22 | MH3-23 | MH3-07 |
|---|---|---|---|---|
| MH Type | CO150 | IC600 | IC600 | IC600 |
| Pipe Diameter (mm) | | Ø160 | Ø160 | Ø160 |
| Slope | | 1:250 | 1:250 | 1:250 |
| Ground level (msl) | 0.790 | 0.800 | 0.860 | 0.800 |
| Pipe Invert Level (msl) | 0.030 | -0.170 | -0.373 | -0.511 |
| Depth of Manhole (m) | 0.760 | 0.970 | 1.233 | 1.950 |
| Distance (m) | 0.00 | 50.04 | 50.67 | 34.45 |

HORIZONTAL SCALE 0 5 10 15 20 25m

VERTICAL SCALE 0 0.5 1.0 1.5 2.0 2.5m

CO160 — Cleanout ø160
IC600 — HDPE Manhole ø600
PS — Pump Station

| | | | | | |
|---|---|---|---|---|---|
| | | | | | |
| | | | | | |
| | | | | | |
| | | | | | |
| | | | | | |
| R00 | JUNE 2020 | STAGE -1 | PD | SBC | SD |
| REV. NO. | Date | Revision Description | Drawn | Chkd | Appd. |

Title:
Consultancy Services for Survey, Design and EIA works of Water Supply and Sewerage Facilities in 5 islands, Maldives - Package 6

Sub Title:
Sewerage System in L.Kunahandhoo

Client:
Ministry of National Planning, Housing and Infrastructure, Republic of Maldives

T: +960 333 3528
E: info@epoch.associates
W: www.epoch.associates
A: G. Rosary West,
Husnuheenaa Magu, Male', Maldives

Drawn: A.R.W
Checked: M.S.S
Designed: F.I.A
Approved: I.W
Date: Aug 2020
SCALE (A3): 1:100
Project No: 01010101
Rev: R-01
Page: PS3-05

## Profile 13

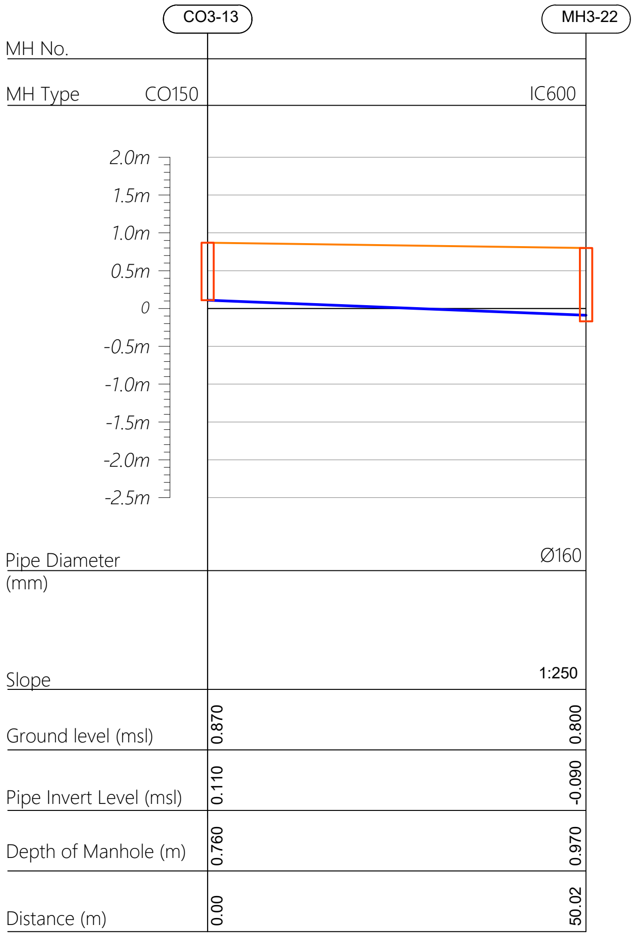

| MH No. | CO3-13 | MH3-22 |
|---|---|---|
| MH Type | CO150 | IC600 |
| Pipe Diameter (mm) | | Ø160 |
| Slope | | 1:250 |
| Ground level (msl) | 0.870 | 0.800 |
| Pipe Invert Level (msl) | 0.110 | -0.090 |
| Depth of Manhole (m) | 0.760 | 0.970 |
| Distance (m) | 0.00 | 50.02 |

## Profile 14

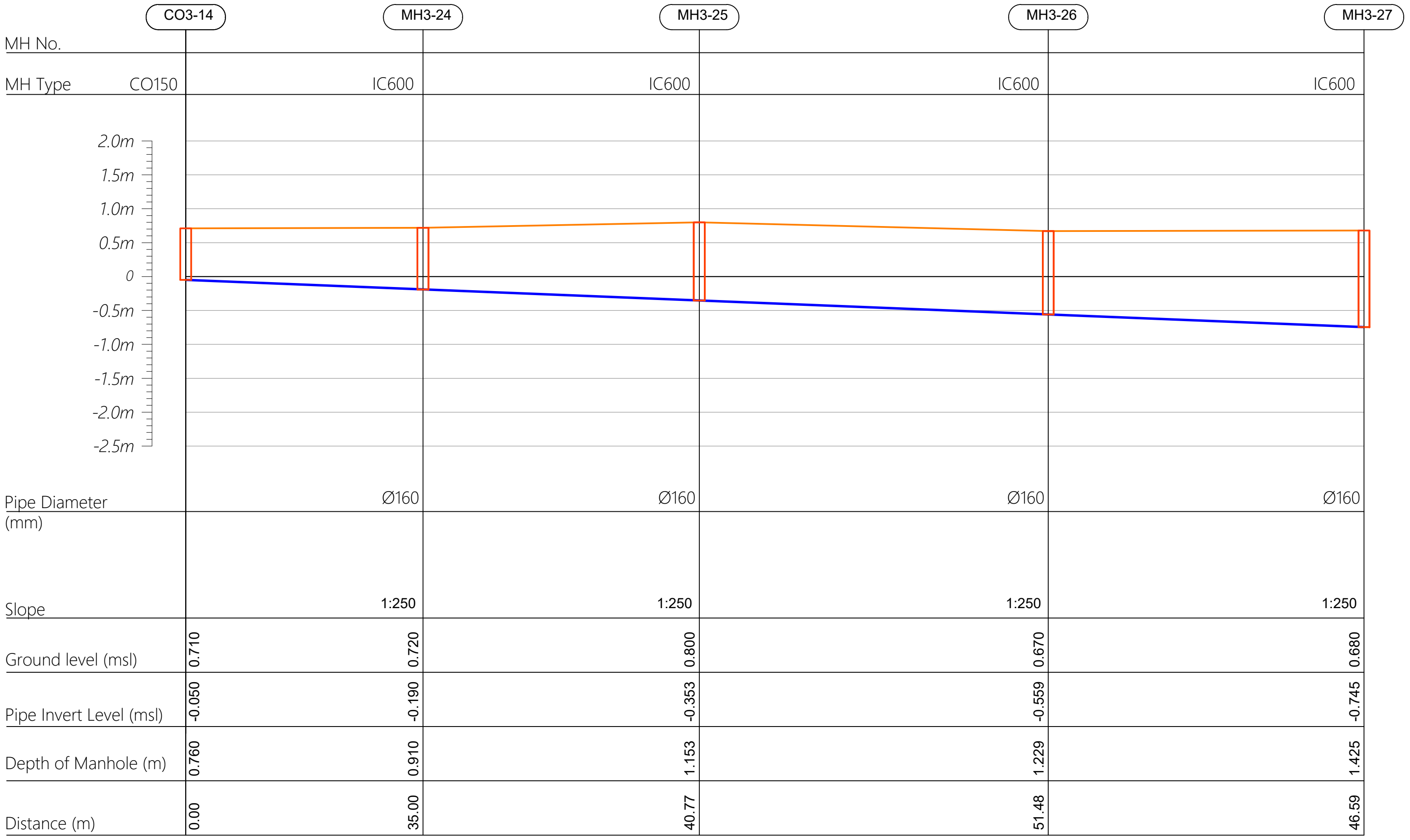

| MH No. | CO3-14 | MH3-24 | MH3-25 | MH3-26 | MH3-27 |
|---|---|---|---|---|---|
| MH Type | CO150 | IC600 | IC600 | IC600 | IC600 |
| Pipe Diameter (mm) | | Ø160 | Ø160 | Ø160 | Ø160 |
| Slope | | 1:250 | 1:250 | 1:250 | 1:250 |
| Ground level (msl) | 0.710 | 0.720 | 0.800 | 0.670 | 0.680 |
| Pipe Invert Level (msl) | -0.050 | -0.190 | -0.353 | -0.559 | -0.745 |
| Depth of Manhole (m) | 0.760 | 0.910 | 1.153 | 1.229 | 1.425 |
| Distance (m) | 0.00 | 35.00 | 40.77 | 51.48 | 46.59 |

HORIZONTAL SCALE 0 5 10 15 20 25m

VERTICAL SCALE 0 0.5 1.0 1.5 2.0 2.5m

CO160 — Cleanout ø160
IC600 — HDPE Manhole ø600
PS — Pump Station

| REV. NO. | Date | Revision Description | Drawn | Chkd | Appd. |
|---|---|---|---|---|---|
| R00 | JUNE 2020 | STAGE -1 | PD | SBC | SD |

Title:
*Consultancy Services for Survey, Design and EIA works of Water Supply and Sewerage Facilities in 5 islands, Maldives - Package 6*

Sub Title:
*Sewerage System in L.Kunahandhoo*

Client:
*Ministry of National Planning, Housing and Infrastructure, Republic of Maldives*

EPOCH ASSOCIATES
**T**: +960 333 3528
**E**: info@epoch.associates
**W**: www.epoch.associates
**A**: G. Rosary West,
Husnuheenaa Magu, Male', Maldives

FEEDBACK INFRA
Making Infrastructure Happen

Drawn: A.R.W
Checked: M.S.S
Designed: F.I.A
Approved: I.W
Date: Aug 2020
SCALE (A3): 1:100
Project No: 01010101
Rev: R-01
Page: **PS3-06**

## Profile 14

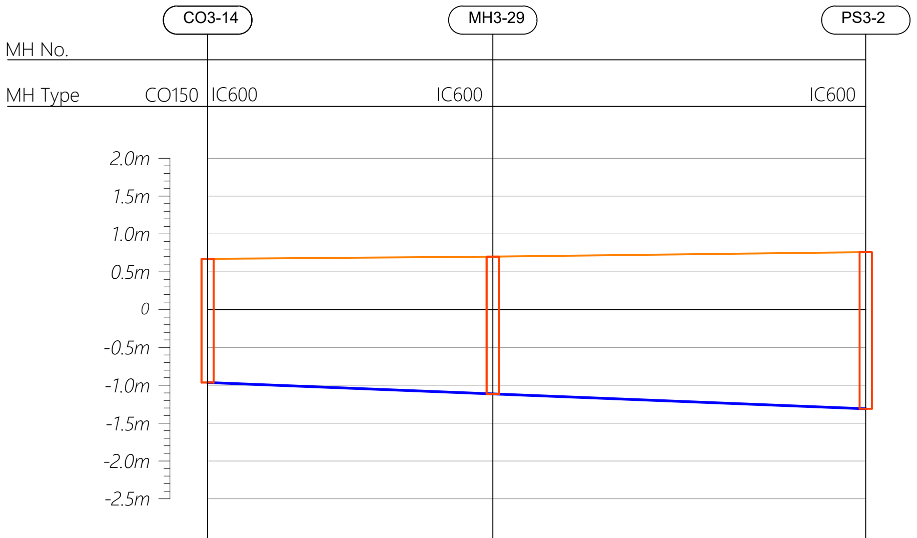
CO3-14
MH3-29
PS3-2
MH No.
MH Type
CO150
IC600
IC600
IC600
2.0m
1.5m
1.0m
0.5m
0
-0.5m
-1.0m
-1.5m
-2.0m
-2.5m

| | CO3-14 | MH3-29 | PS3-2 |
|---|---|---|---|
| Pipe Diameter (mm) | Ø160 | Ø160 | Ø160 |
| Slope | 1:250 | 1:250 | 1:250 |
| Ground level (msl) | 0.670 | 0.700 | 0.760 |
| Pipe Invert Level (msl) | -0.963 | -1.114 | -1.311 |
| Depth of Manhole (m) | 1.633 | 1.814 | 2.071 |
| Distance (m) | 54.35 | 37.71 | 49.31 |

## Profile 15

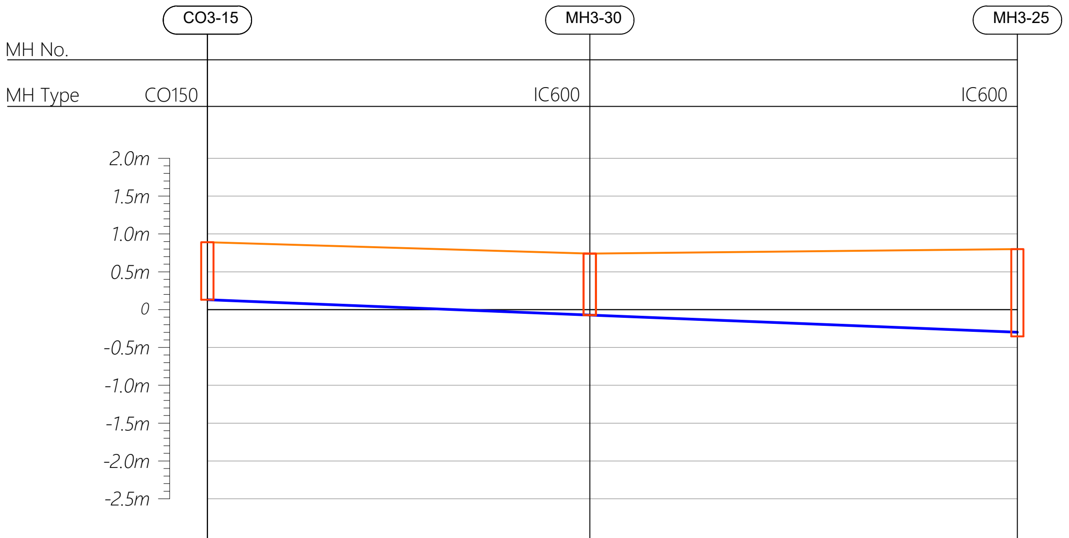
CO3-15
MH3-30
MH3-25
MH No.
MH Type
CO150
IC600
IC600
2.0m
1.5m
1.0m
0.5m
0
-0.5m
-1.0m
-1.5m
-2.0m
-2.5m

| | CO3-15 | MH3-30 | MH3-25 |
|---|---|---|---|
| Pipe Diameter (mm) | | Ø160 | Ø160 |
| Slope | | 1:250 | 1:250 |
| Ground level (msl) | 0.890 | 0.740 | 0.800 |
| Pipe Invert Level (msl) | 0.130 | -0.072 | -0.299 |
| Depth of Manhole (m) | 0.760 | 0.812 | 1.153 |
| Distance (m) | 0.00 | 50.59 | 56.56 |

## Profile 16

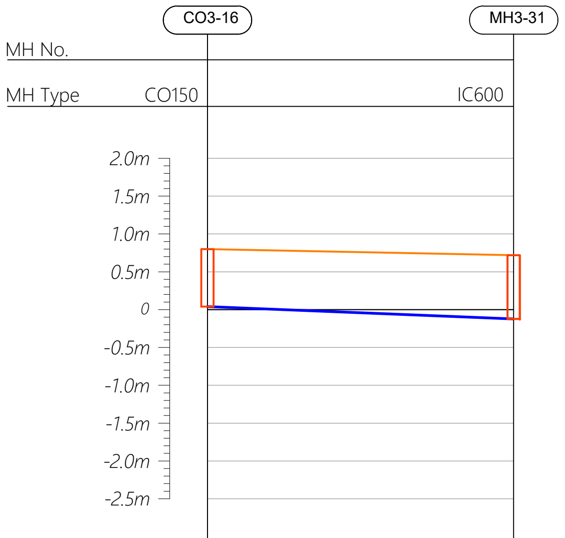
CO3-16
MH3-31
MH No.
MH Type
CO150
IC600
2.0m
1.5m
1.0m
0.5m
0
-0.5m
-1.0m
-1.5m
-2.0m
-2.5m

| | CO3-16 | MH3-31 |
|---|---|---|
| Pipe Diameter (mm) | | Ø160 |
| Slope | | 1:250 |
| Ground level (msl) | 0.800 | 0.720 |
| Pipe Invert Level (msl) | 0.040 | -0.122 |
| Depth of Manhole (m) | 0.760 | 0.842 |
| Distance (m) | 0.00 | 40.51 |

HORIZONTAL SCALE 0 5 10 15 20 25m

VERTICAL SCALE 0 0.5 1.0 1.5 2.0 2.5m

CO160 — Cleanout ø160
IC600 — HDPE Manhole ø600
PS — Pump Station

| | | | | | |
|---|---|---|---|---|---|
| | | | | | |
| | | | | | |
| | | | | | |
| | | | | | |
| | | | | | |
| R00 | JUNE 2020 | STAGE -1 | PD | SBC | SD |
| REV. NO. | Date | Revision Description | Drawn | Chkd | Appd. |

Title:
*Consultancy Services for Survey, Design and EIA works of Water Supply and Sewerage Facilities in 5 islands, Maldives - Package 6*

Sub Title:
*Sewerage System in L.Kunahandhoo*

Client:
*Ministry of National Planning, Housing and Infrastructure, Republic of Maldives*

EPOCH ASSOCIATES
**T**: +960 333 3528
**E**: info@epoch.associates
**W**: wwww.epoch.associates
**A**: G. Rosary West,
Husnuheenaa Magu, Male', Maldives

FEEDBACK INFRA
Making Infrastructure Happen

Drawn: A.R.W
Checked: M.S.S
Designed: F.I.A
Approved: I.W
Date: Aug 2020
SCALE (A3): 1:100
Project No: 01010101
Rev: *R-01*
Page: ***PS3-07***

## Profile 16

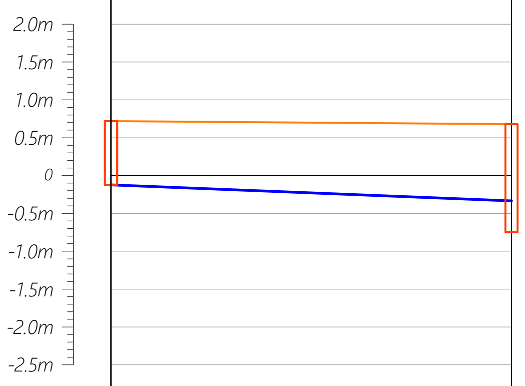

| | | |
|---|---|---|
| MH No. | CO3-16 | MH3-27 |
| MH Type | CO150 IC600 | IC600 |
| Pipe Diameter (mm) | Ø160 | Ø160 |
| Slope | 1:250 | 1:250 |
| Ground level (msl) | 0.720 | 0.680 |
| Pipe Invert Level (msl) | -0.122 | -0.334 |
| Depth of Manhole (m) | 0.842 | 1.425 |
| Distance (m) | 40.51 | 52.93 |

## Profile 17

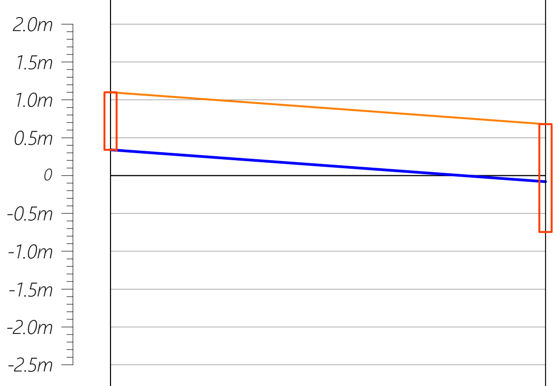

| | | |
|---|---|---|
| MH No. | CO3-17 | MH3-27 |
| MH Type | CO150 | IC600 |
| Pipe Diameter (mm) | | Ø160 |
| Slope | | 1:137 |
| Ground level (msl) | 1.100 | 0.680 |
| Pipe Invert Level (msl) | 0.340 | -0.080 |
| Depth of Manhole (m) | 0.760 | 1.425 |
| Distance (m) | 0.00 | 57.54 |

## Profile 18

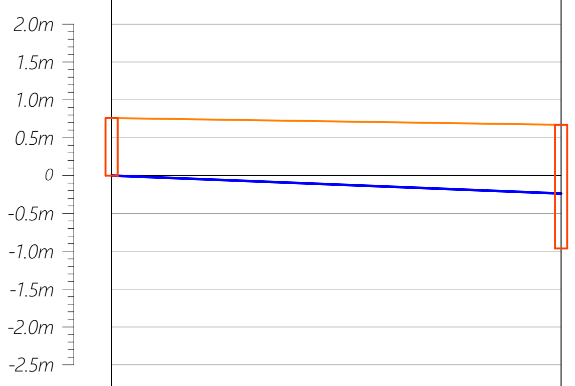

| | | |
|---|---|---|
| MH No. | CO3-18 | MH3-28 |
| MH Type | CO150 | IC600 |
| Pipe Diameter (mm) | | Ø160 |
| Slope | | 1:250 |
| Ground level (msl) | 0.760 | 0.670 |
| Pipe Invert Level (msl) | 0.000 | -0.238 |
| Depth of Manhole (m) | 0.760 | 1.633 |
| Distance (m) | 0.00 | 59.42 |

HORIZONTAL SCALE 0 5 10 15 20 25m

VERTICAL SCALE 0 0.5 1.0 1.5 2.0 2.5m

CO160 — Cleanout ø160
IC600 — HDPE Manhole ø600
PS — Pump Station

| | | | | | |
|---|---|---|---|---|---|
| | | | | | |
| | | | | | |
| | | | | | |
| | | | | | |
| R00 | JUNE 2020 | STAGE -1 | PD | SBC | SD |
| REV. NO. | Date | Revision Description | Drawn | Chkd | Appd. |

Title:
*Consultancy Services for Survey, Design and EIA works of Water Supply and Sewerage Facilities in 5 islands, Maldives - Package 6*

Sub Title:
*Sewerage System in L.Kunahandhoo*

Client:
*Ministry of National Planning, Housing and Infrastructure, Republic of Maldives*

EPOCH ASSOCIATES

**T**: +960 333 3528
**E**: info@epoch.associates
**W**: wwww.epoch.associates
**A**: G. Rosary West, Husnuheenaa Magu, Male', Maldives

FEEDBACK INFRA
Making Infrastructure Happen

| | |
|---|---|
| Drawn: A.R.W | Checked: M.S.S |
| Designed: F.I.A | Approved: I.W |
| Date: Aug 2020 | SCALE (A3): 1:100 |
| Project No: 01010101 | |
| Rev: R-01 | Page: PS3-08 |

## Profile 19

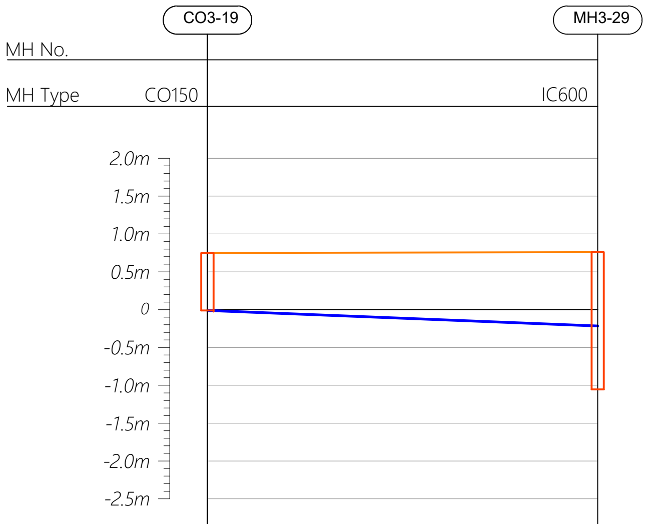

| MH No. | CO3-19 | MH3-29 |
|---|---|---|
| MH Type | CO150 | IC600 |
| Pipe Diameter (mm) | | Ø160 |
| Slope | | 1:250 |
| Ground level (msl) | 0.750 | 0.760 |
| Pipe Invert Level (msl) | -0.010 | -0.216 |
| Depth of Manhole (m) | 0.760 | 1.814 |
| Distance (m) | 0.00 | 51.59 |

## Profile 20

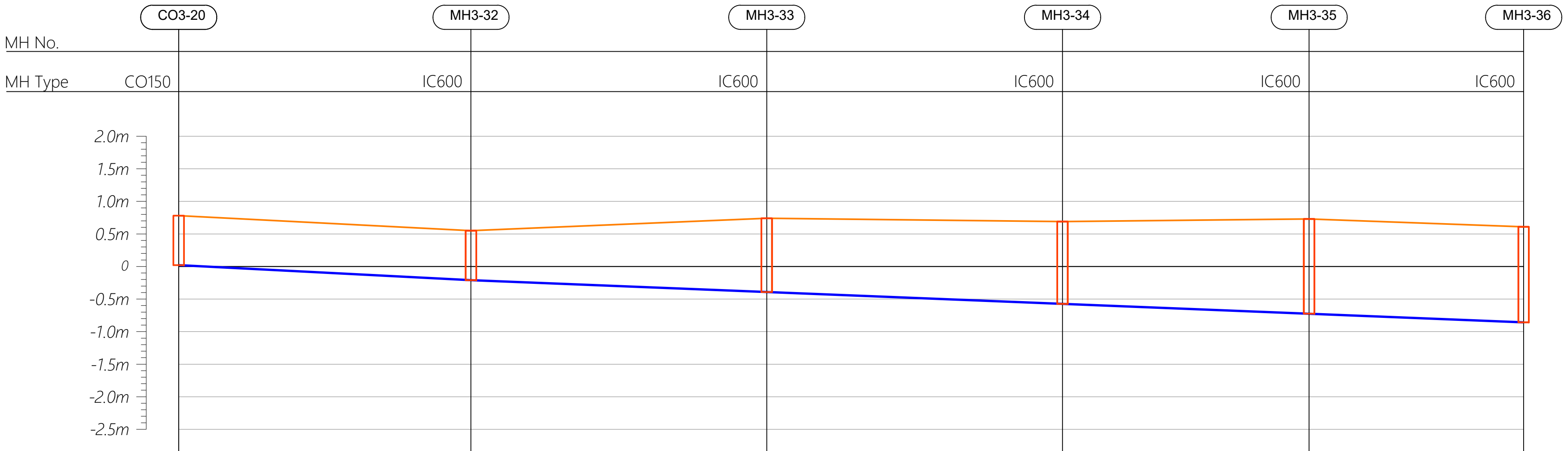

| MH No. | CO3-20 | MH3-32 | MH3-33 | MH3-34 | MH3-35 | MH3-36 |
|---|---|---|---|---|---|---|
| MH Type | CO150 | IC600 | IC600 | IC600 | IC600 | IC600 |
| Pipe Diameter (mm) | | Ø160 | Ø160 | Ø160 | Ø160 | Ø160 |
| Slope | | 1:195 | 1:250 | 1:250 | 1:250 | 1:250 |
| Ground level (msl) | 0.780 | 0.550 | 0.740 | 0.690 | 0.730 | 0.610 |
| Pipe Invert Level (msl) | 0.020 | -0.210 | -0.392 | -0.573 | -0.725 | -0.857 |
| Depth of Manhole (m) | 0.760 | 0.760 | 1.132 | 1.263 | 1.455 | 1.467 |
| Distance (m) | 0.00 | 44.89 | 45.43 | 45.43 | 37.87 | 32.95 |

HORIZONTAL SCALE 0 5 10 15 20 25m

VERTICAL SCALE 0 0.5 1.0 1.5 2.0 2.5m

CO160 — Cleanout ø160
IC600 — HDPE Manhole ø600
PS — Pump Station

| | | | | | |
|---|---|---|---|---|---|
| | | | | | |
| | | | | | |
| | | | | | |
| | | | | | |
| | | | | | |
| R00 | JUNE 2020 | STAGE -1 | PD | SBC | SD |
| REV. NO. | Date | Revision Description | Drawn | Chkd | Appd. |

Title:
*Consultancy Services for Survey, Design and EIA works of Water Supply and Sewerage Facilities in 5 islands, Maldives - Package 6*

Sub Title:
*Sewerage System in L.Kunahandhoo*

Client:
*Ministry of National Planning, Housing and Infrastructure, Republic of Maldives*

EPOCH ASSOCIATES
**T**: +960 333 3528
**E**: info@epoch.associates
**W**: wwww.epoch.associates
**A**: G. Rosary West,
Husnuheenaa Magu, Male', Maldives

FEEDBACK INFRA
Making Infrastructure Happen

| | |
|---|---|
| Drawn: A.R.W | Checked: M.S.S |
| Designed: F.I.A | Approved: I.W |
| Date: Aug 2020 | SCALE (A3): 1:100 |
| Project No: 01010101 | |
| Rev: *R-01* | Page: ***PS3-09*** |

## Profile 20

| MH No. | CO3-20 | MH3-37 | MH3-38 | PS1-3 |
|---|---|---|---|---|
| MH Type | CO150 IC600 | IC600 | IC600 | IC600 |

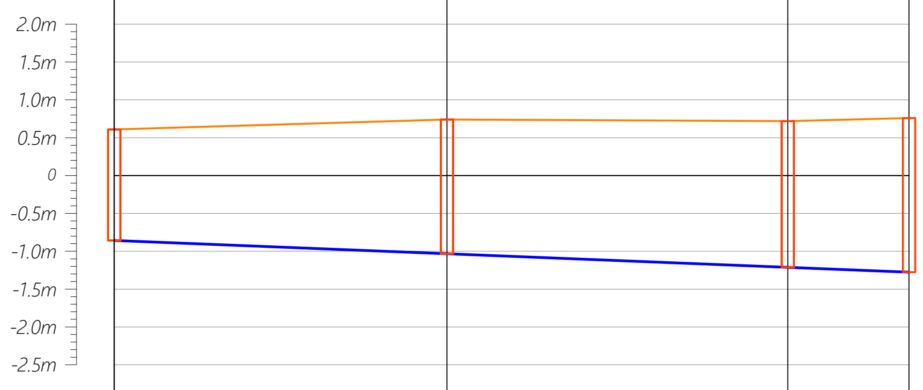

| | CO3-20 | MH3-37 | MH3-38 | PS1-3 |
|---|---|---|---|---|
| Pipe Diameter (mm) | Ø160 | Ø160 | Ø160 | Ø160 |
| Slope | 1:250 | 1:250 | 1:250 | 1:250 |
| Ground level (msl) | 0.610 | 0.740 | 0.720 | 0.760 |
| Pipe Invert Level (msl) | -0.857 | -1.033 | -1.213 | -1.277 |
| Depth of Manhole (m) | 1.467 | 1.773 | 1.933 | 2.037 |
| Distance (m) | 32.95 | 44.00 | 45.06 | 16.03 |

## Profile 21

| MH No. | CO3-21 | MH3-39 | MH3-40 | MH3-41 | MH3-42 | MH3-36 |
|---|---|---|---|---|---|---|
| MH Type | CO150 | IC600 | IC600 | IC600 | IC600 | IC600 |

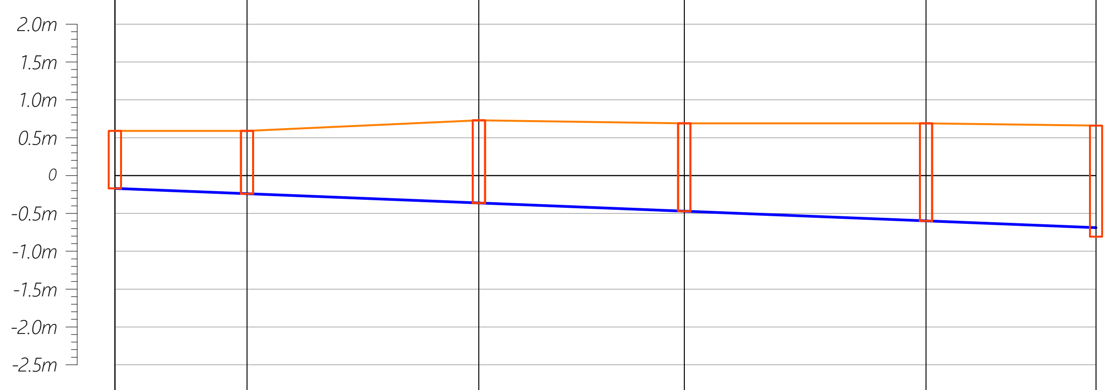

| | CO3-21 | MH3-39 | MH3-40 | MH3-41 | MH3-42 | MH3-36 |
|---|---|---|---|---|---|---|
| Pipe Diameter (mm) | | Ø160 | Ø160 | Ø160 | Ø160 | Ø160 |
| Slope | | 1:250 | 1:250 | 1:250 | 1:250 | 1:250 |
| Ground level (msl) | 0.590 | 0.590 | 0.730 | 0.690 | 0.690 | 0.660 |
| Pipe Invert Level (msl) | -0.170 | -0.240 | -0.363 | -0.471 | -0.599 | -0.689 |
| Depth of Manhole (m) | 0.760 | 0.830 | 1.093 | 1.161 | 1.289 | 1.467 |
| Distance (m) | 0.00 | 17.47 | 30.66 | 27.16 | 31.97 | 22.48 |

HORIZONTAL SCALE

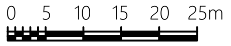

VERTICAL SCALE

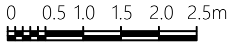

CO160 — Cleanout ⌀160
IC600 — HDPE Manhole ⌀600
PS — Pump Station

| REV. NO. | Date | Revision Description | Drawn | Chkd | Appd. |
|---|---|---|---|---|---|
| | | | | | |
| | | | | | |
| | | | | | |
| | | | | | |
| | | | | | |
| R00 | JUNE 2020 | STAGE -1 | PD | SBC | SD |

Title:
*Consultancy Services for Survey, Design and EIA works of Water Supply and Sewerage Facilities in 5 islands, Maldives - Package 6*

Sub Title:
*Sewerage System in L.Kunahandhoo*

Client:
*Ministry of National Planning, Housing and Infrastructure, Republic of Maldives*

EPOCH ASSOCIATES
**T**: +960 333 3528
**E**: info@epoch.associates
**W**: wwww.epoch.associates
**A**: G. Rosary West,
Husnuheenaa Magu, Male', Maldives

FEEDBACK INFRA
Making Infrastructure Happen

Drawn: A.R.W
Checked: M.S.S
Designed: F.I.A
Approved: I.W
Date: Aug 2020
SCALE (A3): 1:100
Project No: 01010101
Rev: *R-01*
Page: ***PS3-10***

## Profile 22

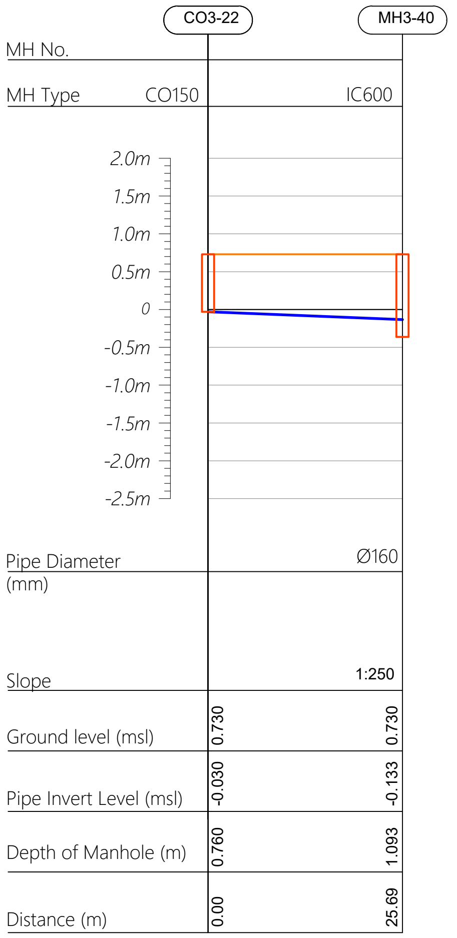
CO3-22
MH3-40
MH No.
MH Type
CO150
IC600
2.0m
1.5m
1.0m
0.5m
0
-0.5m
-1.0m
-1.5m
-2.0m
-2.5m
Pipe Diameter (mm)
Ø160
Slope
1:250
Ground level (msl)
0.730
0.730
Pipe Invert Level (msl)
-0.030
-0.133
Depth of Manhole (m)
0.760
1.093
Distance (m)
0.00
25.69

## Profile 23

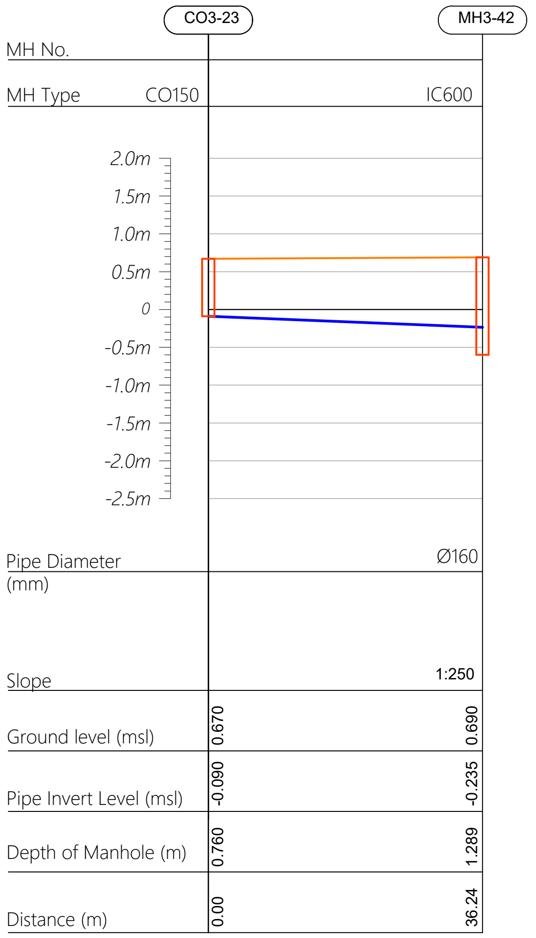
CO3-23
MH3-42
MH No.
MH Type
CO150
IC600
2.0m
1.5m
1.0m
0.5m
0
-0.5m
-1.0m
-1.5m
-2.0m
-2.5m
Pipe Diameter (mm)
Ø160
Slope
1:250
Ground level (msl)
0.670
0.690
Pipe Invert Level (msl)
-0.090
-0.235
Depth of Manhole (m)
0.760
1.289
Distance (m)
0.00
36.24

## Profile 24

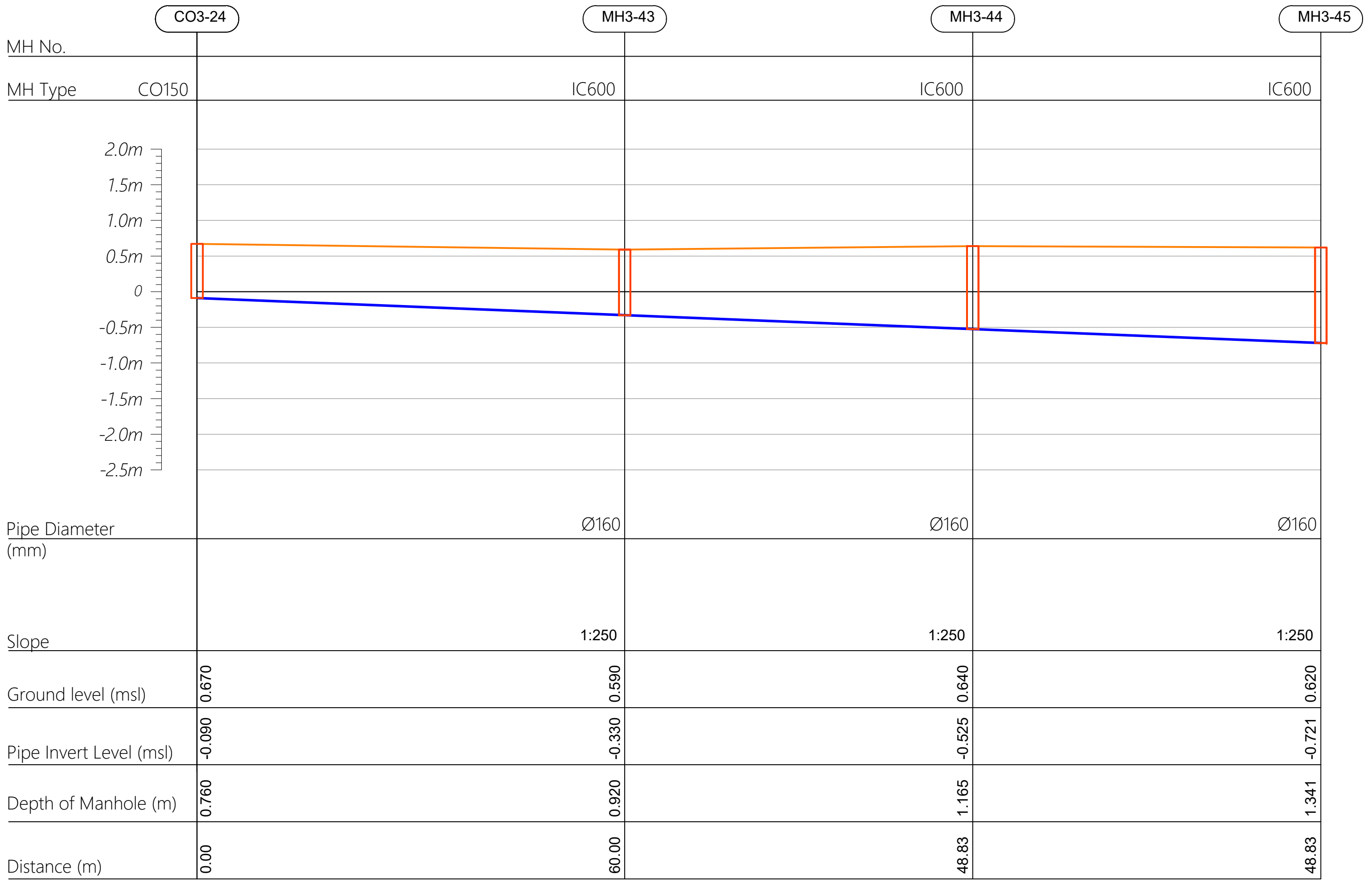
CO3-24
MH3-43
MH3-44
MH3-45
MH No.
MH Type
CO150
IC600
IC600
IC600
2.0m
1.5m
1.0m
0.5m
0
-0.5m
-1.0m
-1.5m
-2.0m
-2.5m
Pipe Diameter (mm)
Ø160
Ø160
Ø160
Slope
1:250
1:250
1:250
Ground level (msl)
0.670
0.590
0.640
0.620
Pipe Invert Level (msl)
-0.090
-0.330
-0.525
-0.721
Depth of Manhole (m)
0.760
0.920
1.165
1.341
Distance (m)
0.00
60.00
48.83
48.83

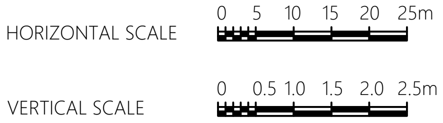
HORIZONTAL SCALE
0 5 10 15 20 25m
VERTICAL SCALE
0 0.5 1.0 1.5 2.0 2.5m

CO160 — Cleanout ⌀160
IC600 — HDPE Manhole ⌀600
PS — Pump Station

| | | | | | |
|---|---|---|---|---|---|
| | | | | | |
| | | | | | |
| | | | | | |
| | | | | | |
| | | | | | |
| R00 | JUNE 2020 | STAGE -1 | PD | SBC | SD |
| REV. NO. | Date | Revision Description | Drawn | Chkd | Appd. |

Title:
*Consultancy Services for Survey, Design and EIA works of Water Supply and Sewerage Facilities in 5 islands, Maldives - Package 6*

Sub Title:
*Sewerage System in L.Kunahandhoo*

Client:
*Ministry of National Planning, Housing and Infrastructure, Republic of Maldives*

EPOCH ASSOCIATES
**T**: +960 333 3528
**E**: info@epoch.associates
**W**: wwww.epoch.associates
**A**: G. Rosary West,
Husnuheenaa Magu, Male', Maldives

FEEDBACK INFRA
Making Infrastructure Happen

| | |
|---|---|
| Drawn: A.R.W | Checked: M.S.S |
| Designed: F.I.A | Approved: I.W |
| Date: Aug 2020 | SCALE (A3): 1:100 |
| Project No: 01010101 | |
| Rev: *R-01* | Page: ***PS3-11*** |

## Profile 24

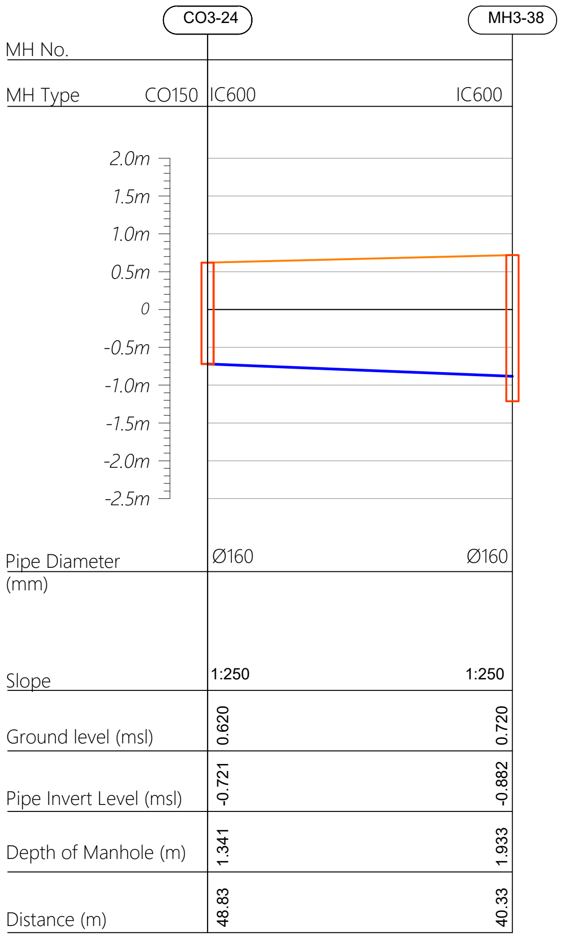
CO3-24
MH3-38
MH No.
MH Type
CO150
IC600
IC600
2.0m
1.5m
1.0m
0.5m
0
-0.5m
-1.0m
-1.5m
-2.0m
-2.5m
Pipe Diameter (mm)
Ø160
Ø160
Slope
1:250
1:250
Ground level (msl)
0.620
0.720
Pipe Invert Level (msl)
-0.721
-0.882
Depth of Manhole (m)
1.341
1.933
Distance (m)
48.83
40.33

## Profile 25

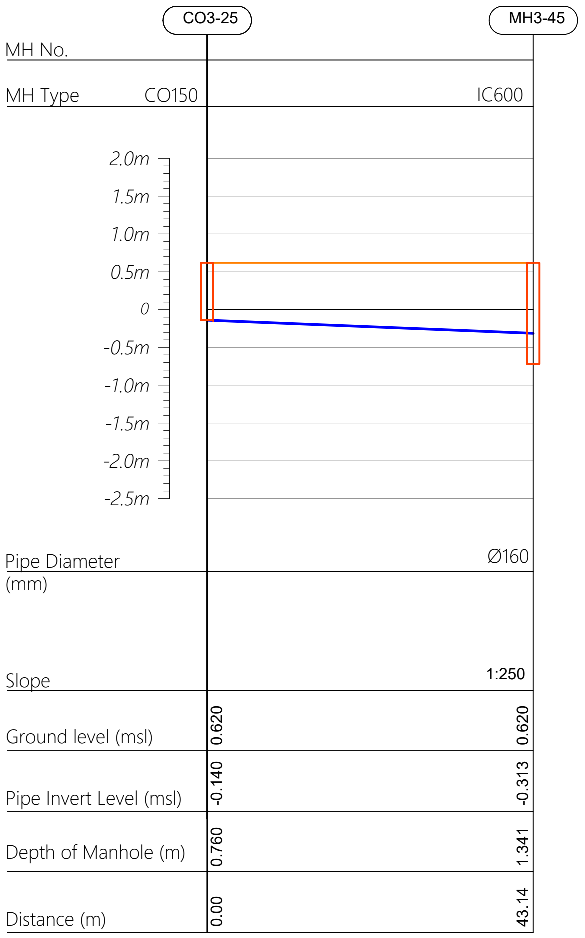
CO3-25
MH3-45
MH No.
MH Type
CO150
IC600
2.0m
1.5m
1.0m
0.5m
0
-0.5m
-1.0m
-1.5m
-2.0m
-2.5m
Pipe Diameter (mm)
Ø160
Slope
1:250
Ground level (msl)
0.620
0.620
Pipe Invert Level (msl)
-0.140
-0.313
Depth of Manhole (m)
0.760
1.341
Distance (m)
0.00
43.14

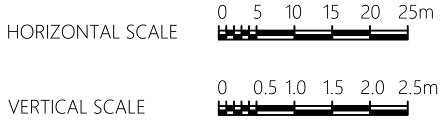
HORIZONTAL SCALE
0 5 10 15 20 25m
VERTICAL SCALE
0 0.5 1.0 1.5 2.0 2.5m

CO160 — Cleanout ϕ160
IC600 — HDPE Manhole ϕ600
PS — Pump Station

| | | | | | |
|---|---|---|---|---|---|
| | | | | | |
| | | | | | |
| | | | | | |
| | | | | | |
| | | | | | |
| R00 | JUNE 2020 | STAGE -1 | PD | SBC | SD |
| REV. NO. | Date | Revision Description | Drawn | Chkd | Appd. |

Title:
*Consultancy Services for Survey, Design and EIA works of Water Supply and Sewerage Facilities in 5 islands, Maldives - Package 6*

Sub Title:
*Sewerage System in L.Kunahandhoo*

Client:
*Ministry of National Planning, Housing and Infrastructure, Republic of Maldives*

EPOCH ASSOCIATES
**T**: +960 333 3528
**E**: info@epoch.associates
**W**: wwww.epoch.associates
**A**: G. Rosary West,
Husnuheenaa Magu, Male', Maldives

FEEDBACK INFRA
Making Infrastructure Happen

Drawn: A.R.W
Checked: M.S.S
Designed: F.I.A
Approved: I.W
Date: Aug 2020
SCALE (A3): 1:100
Project No: 01010101
Rev: *R-01*
Page: ***PS3-12***