RAIN WATER LIFT WELL

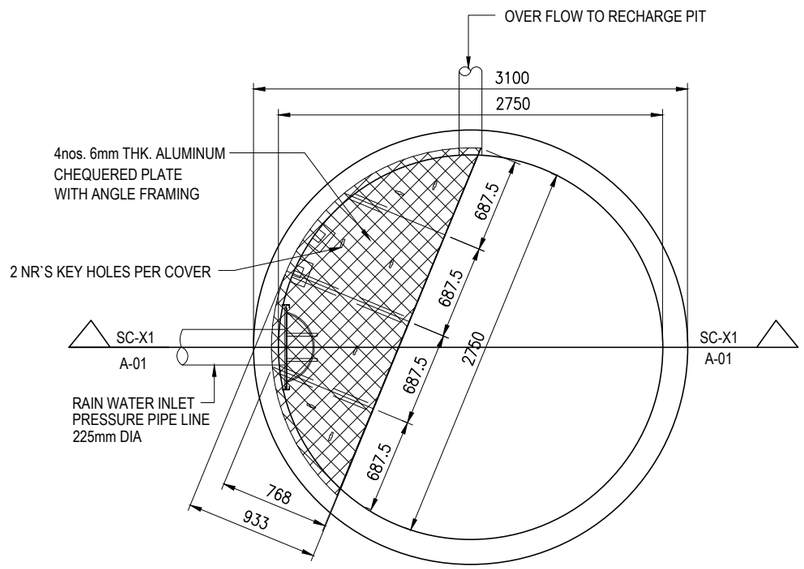

PLAN VIEW

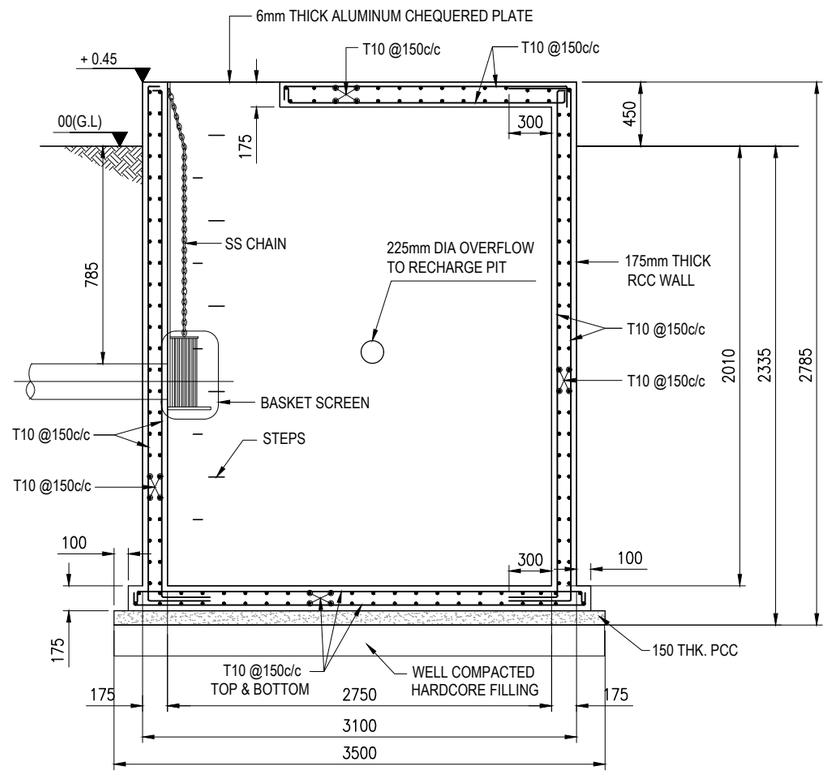

SECTION X1–X1

NOTES:–

1. ALL DIMENSIONS ARE IN MILLIMETRES AND ALL LEVELS AER IN METRES, UNLESS OTHERWISE NOTED.
2. DRAWINGS ARE NOT TO BE SCALED. ONLY WRITTEN DIMENSIONS ARE TO BE FOLLOWED.
3. ALL CONCRETE WORK SHALL BE DESIGN GRADE C30.
4. BLINDING CONCRETE WORK SHALL BE GRADE C10.
5. ALL STRUCTURE WORK SHALL CONFORM TO BS 7668. GRADE 46A/ASTMA36. ALL STRUCTURAL MEMBERS SHALL BE HOT DIP GALVANIZED AND PAINTED AS PER SPECIFICATIONS.
6. STEEL BARS DENOTED "T" SHALL BE HYSD BARS OF GRADE 460 CONFIRMING TO BS 4449.
7. NET SBC OF 15T/SQM IS CONSIDERED IN THE DESIGN.
8. CLEAR COVER TO REINFORCEMENT
   a. RAFT –50mm
   b. WALL –50mm
   c. SLAB –25mm

SHAH TECHNICAL CONSULTANTS PVT. LTD. MUMBAI

VIVEK V. PAGNIS
(STRUCTURAL ENGINEER)

TENDER PURPOSE

No.	DESCRIPTION	BY	DATE	APPR.

REVISION

CONSULTANT
SHAH TECHNICAL CONSULTANTS PVT. LTD., INDIA
IN ASSOCIATION WITH
DEVELOPMENT TECHNOLOGIES MALDIVES, MALDIVES

CLIENT
MINISTRY OF ENVIRONMENT AND ENERGY
MALE' REPUBLIC OF MALDIVES

PROJECT
PROVISION OF RAINWATER HARVESTING SYSTEM IN 9 ISLANDS

ASSIGNMENT
CONSULTANCY SERVICES FOR DESIGN AND SUPERVISION OF RAINWATER HARVESTING SYSTEM IN TH. VANDHOO, TH. GAADHIFFUSHI, TH. OMADHOO, TH. KANDOODHOO, TH. KINBIDHOO, TH. DHIYAMIGILI, M. RAIYMANDHOO, M. VEYVAH, M. NAALAFUSHI, MALDIVES [PACKAGE - 4]

DRAWING TITLE
TYPICAL DRAWING OF LIFT WELL
TH. VANDHOO

APPROVED	CHECKED	DESIGNED	DRAWN
VVP	SSS	SPP	PDP

SCALE	DATE	DRAWING NUMBER	REVISION
AS SHOWN	FEB 2018	Th.Vandhoo/WS/07	0

A1-LANDSCAPE