Proposed 02 Classroom, ICT & Lab at Gdh.Hoandedhdhoo School

(02 Storey)

ARCHITECTURAL & STRUCTURAL DRAWINGS

Client: Ministry of Education

RIYAN PRIVATE LIMITED

t : +9603315049 f : +9603310776
e : info@riyan.com.mv
w : www.riyan.com.mv
3rd floor, H. Azum, Ameeneemagu, Male'

TABLE OF CONTENTS

DRAWING No.	TITLE	REVISION No.	DATE	REMARKS
ARCHITECTURAL		---	---	---
A - 01 /21	SITE PLAN	---	---	---
A - 02 /21	GROUND FLOOR PLAN	---	---	---
A - 03 /21	FIRST FLOOR PLAN	---	---	---
A - 04 /21	ROOF PLAN	---	---	---
A - 05 /21	ELEVATION E1	---	---	---
A - 06 /21	ELEVATION E2	---	---	---
A - 07 /21	SECTION X-X	---	---	---
A - 08 /21	SECTION Y-Y	---	---	---
A - 09 /21	DOOR & WINDOW SCHEDULE - 1	---	---	---
A - 10 /21	DOOR & WINDOW SCHEDULE - 2 & VENTILATION SCHEDULE	---	---	---
A - 11 /21	GROUND FLOOR - FLOOR FINISHES PLAN	---	---	---
A - 12 /21	FIRST FLOOR - FLOOR FINISHES PLAN	---	---	---
A - 13 /21	GROUND FLOOR - REFLECTED CEILING PLAN	---	---	---
A - 14 /21	FIRST FLOOR - REFLECTED CEILING PLAN	---	---	---
A - 15 /21	DETAIL - 1 : STAIRCASE DETAILS	---	---	---
A - 16 /21	DETAIL - 2 :MAIN ENTRANCE RAMP DETAILS	---	---	---
A - 17 /21	DETAIL - 3 :TOILET DETAILS	---	---	---
A - 18 /21	DETAIL - 4 :RC FIN DETAILS (TOILET)	---	---	---
A - 19 /21	DETAIL - 5 :RC FIN DETAILS (CORRIDOR)	---	---	---
A - 20 /21	DETAIL - 6 :RAILING DETAILS			
A - 21 /21	DETAIL - 7 :RC WALL DETAILS	---	---	---
STRUCTURAL		---	---	---
S - 00 /12	GENERAL NOTES	---	---	---
S - 01 /12	FOUNDATION PLAN	---	---	---
S - 02 /12	FIRST FLOOR COLUMN LAYOUT PLAN	---	---	---
S - 03 /12	FIRST FLOOR BEAM PLAN	---	---	---
S - 04 /12	STORE / HALF LANDING FLOOR BEAM & SLAB REIN. PLAN	---	---	---
S - 05 /12	FIRST FLOOR SLAB REINFORCEMENT PLAN	---	---	---
S - 06 /12	ROOF BEAM PLAN - 1 (+6150)	---	---	---
S - 07 /12	ROOF BEAM PLAN - 2 (+6706)	---	---	---
S - 08 /12	ROOF TRUSS AND FRAMING PLAN	---	---	---
S - 09 /12	ROOF TRUSS DETAILS	---	---	---
S - 10 /12	STRUCTURAL DETAILS - 1	---	---	---
S - 11 /12	STRUCTURAL DETAILS - 2	---	---	---
S - 12 /12	STRUCTURAL DETAILS - 3	---	---	---

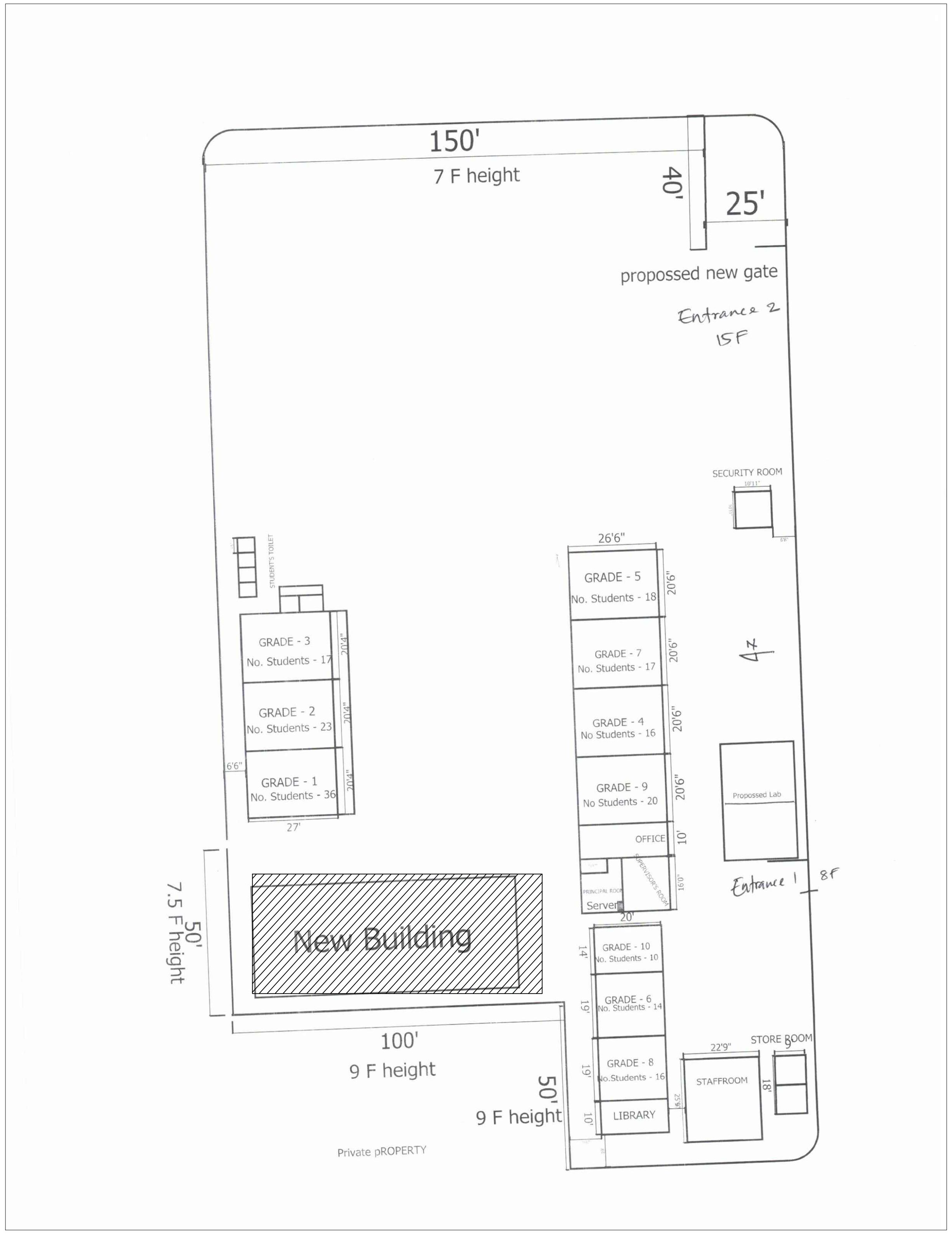
150'
7 F height
40'
25'
propossed new gate
Entrance 2
15F
SECURITY ROOM
10'11"
6'8"
STUDENT'S TOILET
GRADE - 3
No. Students - 17
20'4"
GRADE - 2
No. Students - 23
20'4"
GRADE - 1
No. Students - 36
20'4"
6'6"
27'
26'6"
GRADE - 5
No. Students - 18
20'6"
GRADE - 7
No. Students - 17
20'6"
GRADE - 4
No Students - 16
20'6"
GRADE - 9
No Students - 20
20'6"
OFFICE
10'
PRINCIPAL ROOM
SUPERVISOR'S ROOM
16'0"
Server
20'
4z
Propossed Lab
Entrance 1
8F
50'
7.5 F height
New Building
GRADE - 10
No. Students - 10
14'
GRADE - 6
No. Students - 14
19'
GRADE - 8
No.Students - 16
19'
LIBRARY
10'
25'6"
22'9"
STAFFROOM
18'
STORE ROOM
9
100'
9 F height
50'
9 F height
Private pROPERTY

SITE PLAN

NTS

NOTE:

▨ PROPOSED BUILDING LOCATION (TO BE CONFIRMED AT THE SITE)

NO STRUCTURES TO BE DEMOLISHED AS PER THE SCHOOL (TO BE CONFIRMED AT THE SITE)

Gdh.Hoandedhdhoo School 2 Classroom, ICT & Lab Block (2 story)
Client: Ministry of Education

Project Number: RI/2020/006
Date: March 2021
Architect : Mariyam Irasha Shareef
Engineer : Mohamed Muththalib Waleed
Drawn by : Mariyam Irasha Shareef
Services : Aishath Ahmed
Interior : -

Rev no	Date
--	----------------
--	----------------
--	----------------
--	----------------

RIYAN PRIVATE LIMITED

t : +9603315049 **f :** +9603310776
e : info@riyan.com.mv
w : www.riyan.com.mv
3rd floor, H. Azum, Ameeneemagu, Male'

Title: Site Plan

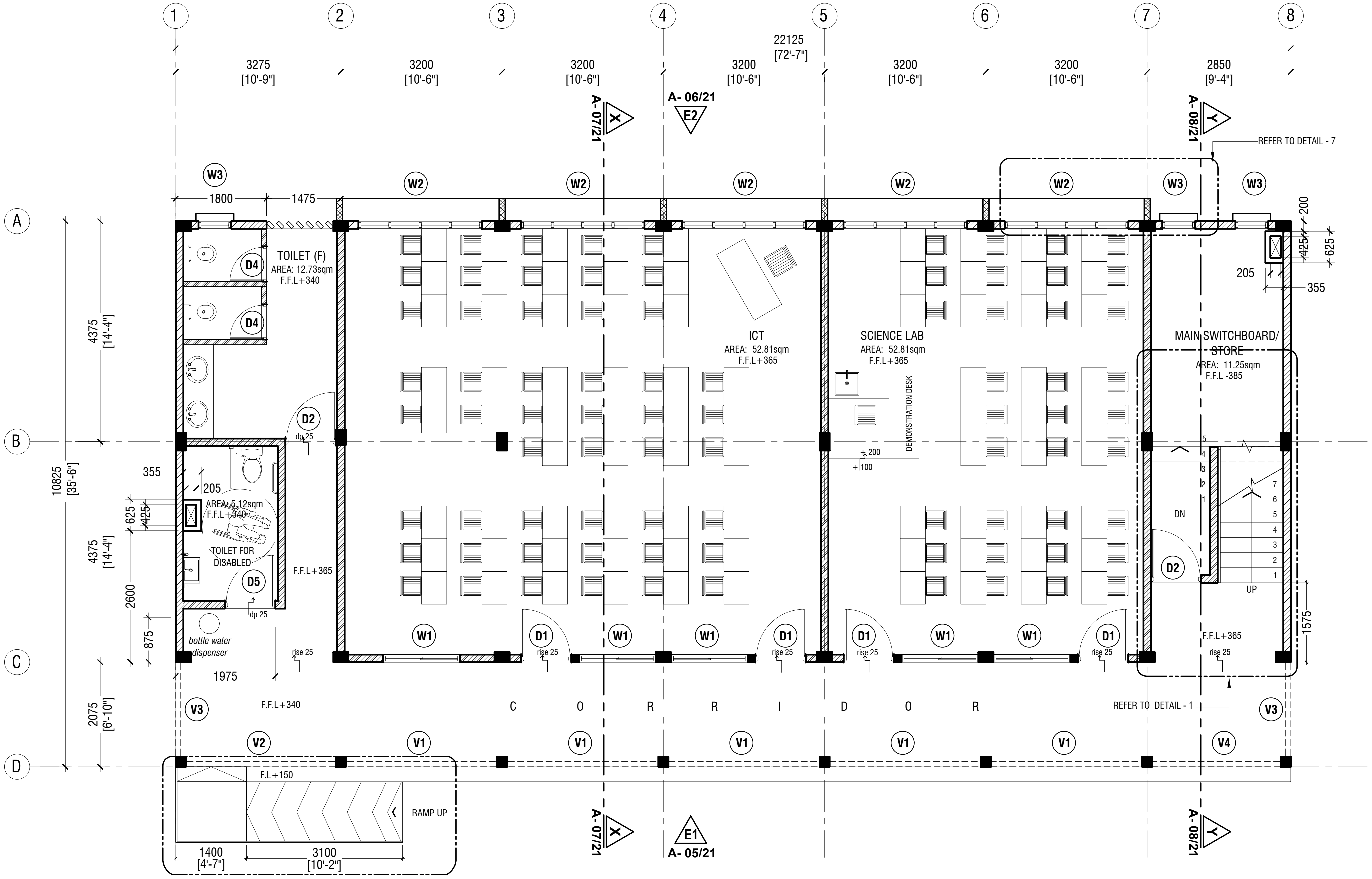
1
2
3
4
5
6
7
8
22125
[72'-7"]
3275
[10'-9"]
3200
[10'-6"]
2850
[9'-4"]
A- 07/21
X
A- 06/21
E2
A- 08/21
Y
REFER TO DETAIL - 7
W1
W2
W3
1800
1475
200
425
625
205
355
A
B
C
D
4375
[14'-4"]
10825
[35'-6"]
2075
[6'-10"]
2600
875
1975
TOILET (F)
AREA: 12.73sqm
F.F.L+340
D1
D2
D4
D5
dp 25
AREA: 5.12sqm
F.F.L+340
TOILET FOR
DISABLED
F.F.L+365
bottle water
dispenser
rise 25
ICT
AREA: 52.81sqm
F.F.L+365
SCIENCE LAB
AREA: 52.81sqm
F.F.L+365
DEMONSTRATION DESK
+200
+100
MAIN SWITCHBOARD/
STORE
AREA: 11.25sqm
F.F.L -385
DN
UP
1575
F.F.L+340
C O R R I D O R
REFER TO DETAIL - 1
V1
V2
V3
V4
F.L+150
RAMP UP
1400
[4'-7"]
3100
[10'-2"]
E1
A- 05/21

GROUND FLOOR PLAN

SCALE 1:100

0 0.5 1 2 3 4 5

N

NOTE:

▨	PROPOSED 150mm THICK SOLID BLOCK - INTERIOR MASONRY WALL WITH 16mm PLASTERING, GROUND SMOOTH IN SELECTED PAINT FINISH
▨	PROPOSED 150mm THICK SOLID BLOCK - EXTERIOR MASONRY WALL WITH 20mm PLASTERING, GROUND SMOOTH IN SELECTED PAINT FINISH
▭	PROPOSED 100mm THICK SOLID BLOCK - INTERIOR MASONRY WALL WITH 16mm PLASTERING, GROUND SMOOTH IN SELECTED PAINT FINISH
▨	PROPOSED 120mm THICK RC WALL TO BE WATER PROOFED WITH WATER PROOFING AGENT
▨	PROPOSED 100mm THICK 2400mm HIGH SOLID BLOCK MASONRY WALL WITH 16mm PLASTERING, GROUND SMOOTH IN SELECTED PAINT FINISH

THE SCREEDING AND TILES ARE INCORPORATED IN THE FLOOR FINISH LEVELS

REFER TO ARCHITECT FOR FURTHER ASSISTANCE.

Gdh.Hoandedhdhoo School 2 Classroom, ICT & Lab Block (2 story)
Client: Ministry of Education

Project Number: RI/2020/006
Date: March 2021
Architect : Mariyam Irasha Shareef
Engineer : Mohamed Muththalib Waleed
Drawn by : Mariyam Irasha Shareef
Services : Aishath Ahmed
Interior : -

Rev no	Date
--	----------------
--	----------------
--	----------------
--	----------------

RIYAN PRIVATE LIMITED

t : +9603315049 f : +9603310776
e : info@riyan.com.mv
w : www.riyan.com.mv
3rd floor, H. Azum, Ameeneemagu, Male'

Title: Ground Floor Plan
-

Page: A-02/21

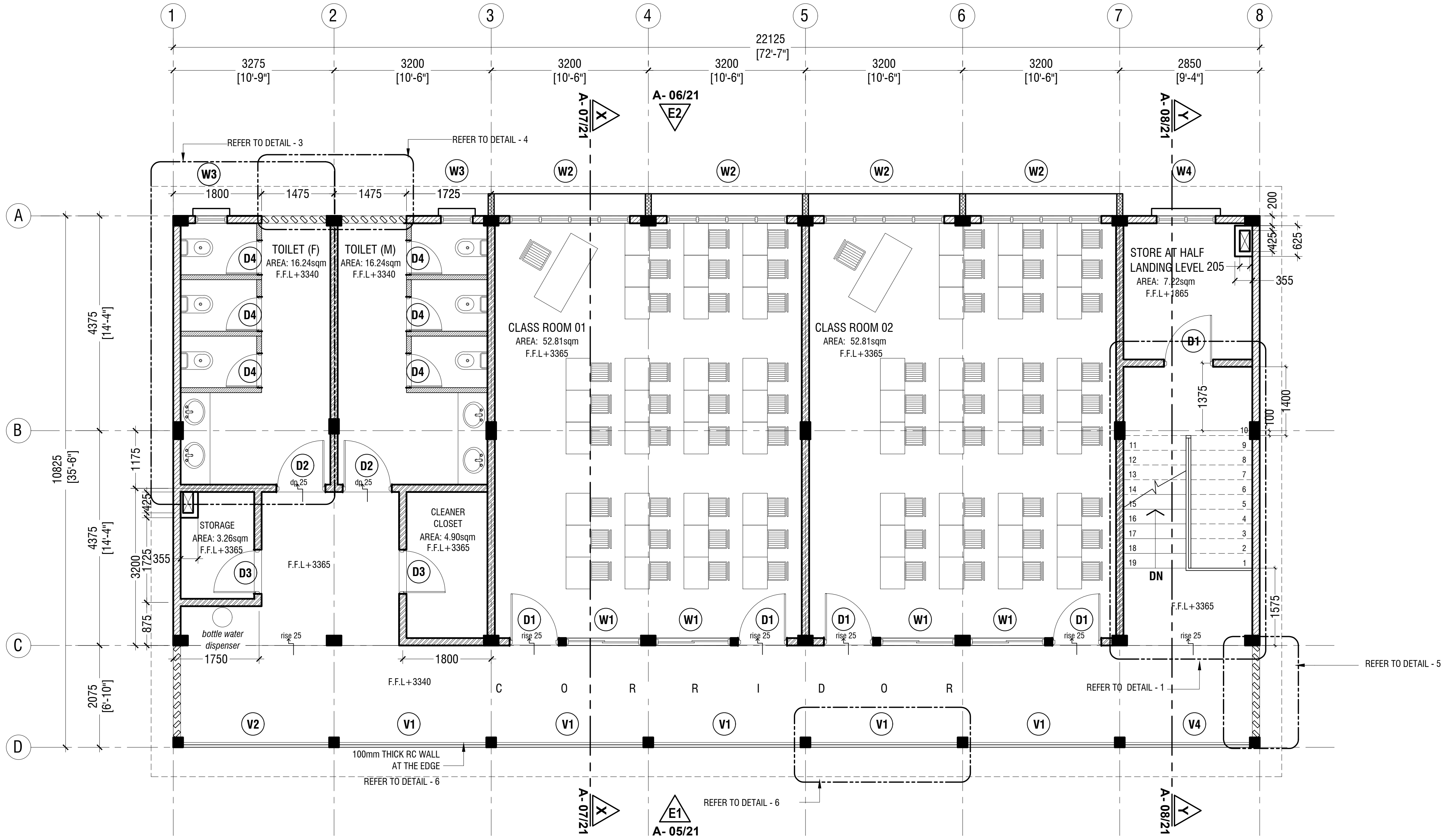
1
2
3
4
5
6
7
8
22125
[72'-7"]
3275
[10'-9"]
3200
[10'-6"]
2850
[9'-4"]
A- 07/21
X
A- 06/21
E2
A- 08/21
Y
REFER TO DETAIL - 3
REFER TO DETAIL - 4
W3
W2
W4
1800
1475
1725
A
B
C
D
200
425
625
355
TOILET (F)
AREA: 16.24sqm
F.F.L+3340
TOILET (M)
AREA: 16.24sqm
F.F.L+3340
D4
CLASS ROOM 01
AREA: 52.81sqm
F.F.L+3365
CLASS ROOM 02
AREA: 52.81sqm
F.F.L+3365
STORE AT HALF
LANDING LEVEL 205
AREA: 7.22sqm
F.F.L+1865
D1
1375
100
1400
4375
[14'-4"]
10825
[35'-6"]
1175
D2
dn 25
STORAGE
AREA: 3.26sqm
F.F.L+3365
CLEANER
CLOSET
AREA: 4.90sqm
F.F.L+3365
D3
F.F.L+3365
3200
1725
355
875
bottle water
dispenser
rise 25
1750
1800
W1
DN
1575
REFER TO DETAIL - 1
REFER TO DETAIL - 5
F.F.L+3340
C O R R I D O R
2075
[6'-10"]
V2
V1
V4
100mm THICK RC WALL
AT THE EDGE
REFER TO DETAIL - 6
E1
A- 05/21

FIRST FLOOR PLAN

SCALE 1:100

0 0.5 1 2 3 4 5

N

NOTE:

▨	PROPOSED 150mm THICK SOLID BLOCK - INTERIOR MASONRY WALL WITH 16mm PLASTERING, GROUND SMOOTH IN SELECTED PAINT FINISH
▨	PROPOSED 150mm THICK SOLID BLOCK - EXTERIOR MASONRY WALL WITH 20mm PLASTERING, GROUND SMOOTH IN SELECTED PAINT FINISH
═	PROPOSED 100mm THICK SOLID BLOCK - INTERIOR MASONRY WALL WITH 16mm PLASTERING, GROUND SMOOTH IN SELECTED PAINT FINISH
▩	PROPOSED 120mm THICK RC WALL TO BE WATER PROOFED WITH WATER PROOFING AGENT
▨	PROPOSED 100mm THICK 2400mm HIGH SOLID BLOCK MASONRY WALL WITH 16mm PLASTERING, GROUND SMOOTH IN SELECTED PAINT FINISH

THE SCREEDING AND TILES ARE INCORPORATED IN THE FLOOR FINISH LEVELS

REFER TO ARCHITECT FOR FURTHER ASSISTANCE.

Gdh.Hoandedhdhoo School 2 Classroom, ICT & Lab Block (2 story)
Client: Ministry of Education

Project Number: RI/2020/006
Date: March 2021
Architect : Mariyam Irasha Shareef
Engineer : Mohamed Muththalib Waleed
Drawn by : Mariyam Irasha Shareef
Services : Aishath Ahmed
Interior : -

Rev no	Date
--	-------------
--	-------------
--	-------------
--	-------------

RIYAN PRIVATE LIMITED

t : +9603315049 f : +9603310776
e : info@riyan.com.mv
w : www.riyan.com.mv
3rd floor, H. Azum, Ameeneemagu, Male'

Title: First Floor Plan
-

Page: A-03/21

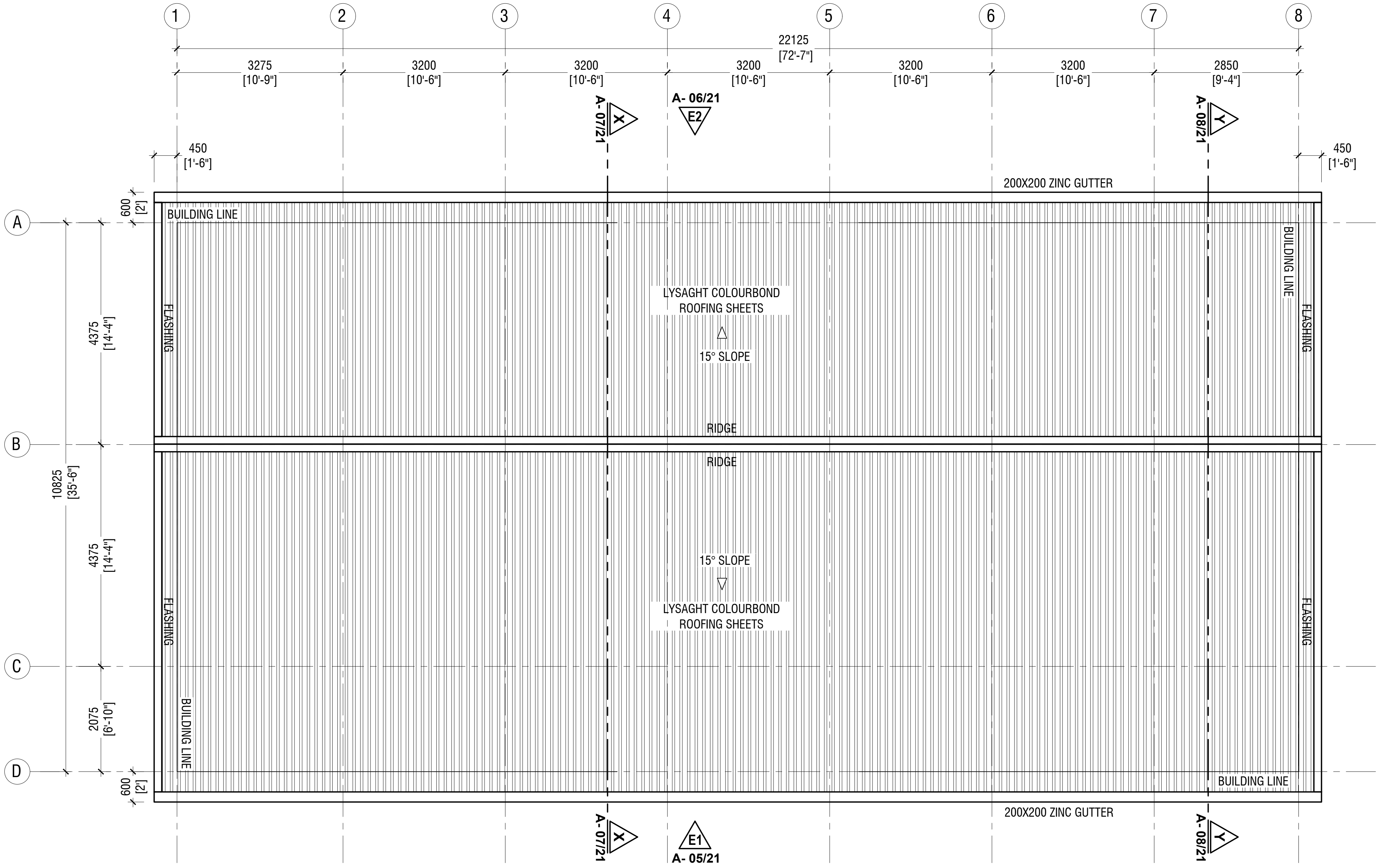
1
2
3
4
5
6
7
8
22125
[72'-7"]
3275
[10'-9"]
3200
[10'-6"]
3200
[10'-6"]
3200
[10'-6"]
3200
[10'-6"]
3200
[10'-6"]
2850
[9'-4"]
A- 07/21
X
A- 06/21
E2
A- 08/21
Y
450
[1'-6"]
450
[1'-6"]
200X200 ZINC GUTTER
A
B
C
D
600
[2']
BUILDING LINE
FLASHING
LYSAGHT COLOURBOND
ROOFING SHEETS
15° SLOPE
BUILDING LINE
FLASHING
4375
[14'-4"]
10825
[35'-6"]
RIDGE
RIDGE
4375
[14'-4"]
15° SLOPE
LYSAGHT COLOURBOND
ROOFING SHEETS
FLASHING
FLASHING
2075
[6'-10"]
BUILDING LINE
BUILDING LINE
600
[2']
200X200 ZINC GUTTER
A- 07/21
X
E1
A- 05/21
A- 08/21
Y

NOTE:

ROOF SLOPE : 15° SLOPE

ROOF MATERIAL : LYSAGHT COLOURBOND ROOFING SHEETS

ROOF PLAN

SCALE 1:100

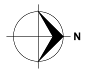

Gdh.Hoandedhdhoo School 2 Classroom, ICT & Lab Block (2 story)
Client: Ministry of Education

Project Number: RI/2020/006
Date: March 2021
Architect : Mariyam Irasha Shareef
Engineer : Mohamed Muththalib Waleed
Drawn by : Mariyam Irasha Shareef
Services : Aishath Ahmed
Interior : -

Rev no	Date
--	------------
--	------------
--	------------
--	------------

RIYAN PRIVATE LIMITED

t : +9603315049 **f :** +9603310776
e : info@riyan.com.mv
w : www.riyan.com.mv
3rd floor, H. Azum, Ameeneemagu, Male'

Title: Roof Plan

Page: A-04/21

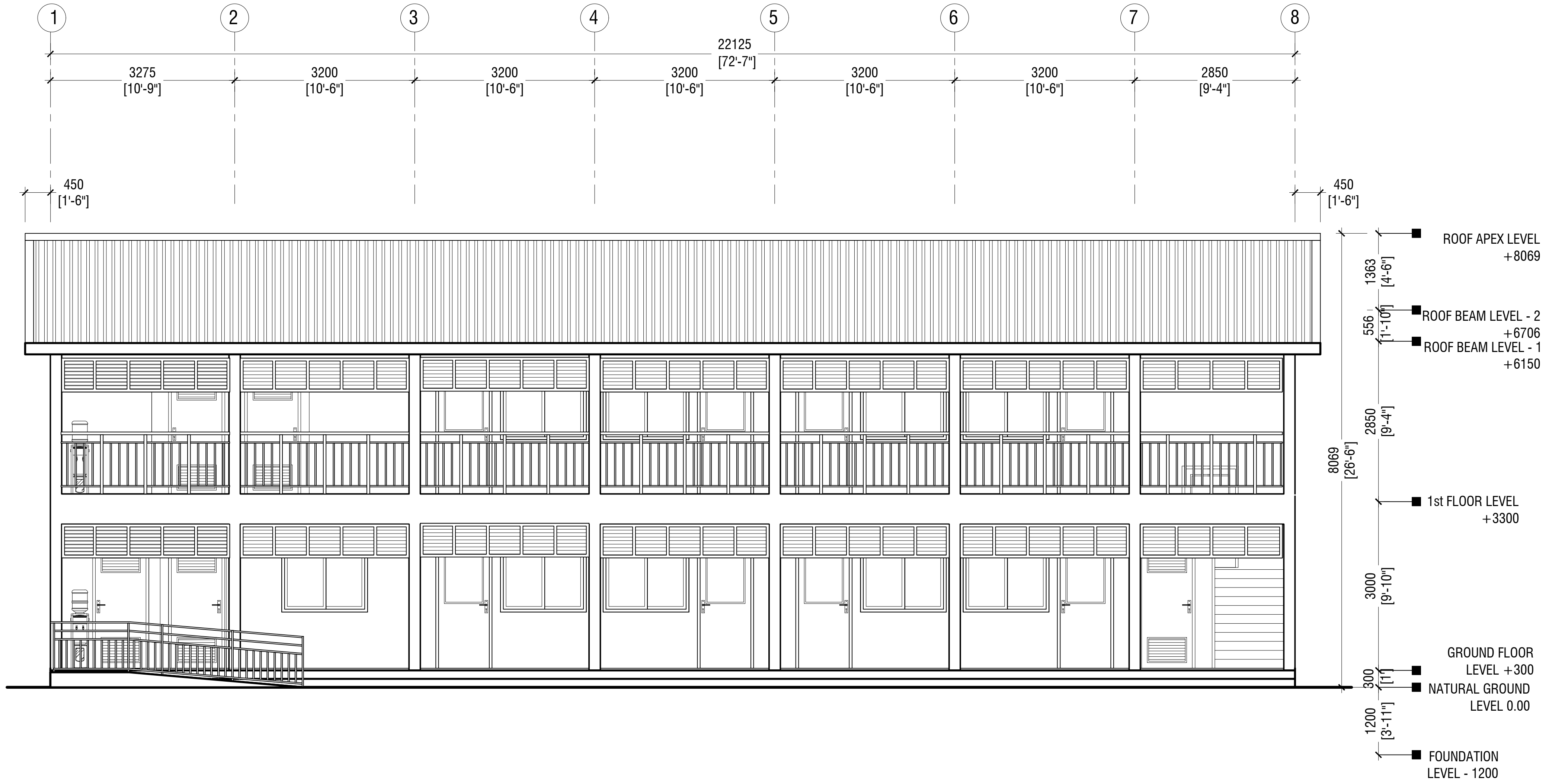
1
2
3
4
5
6
7
8
22125
[72'-7"]
3275
[10'-9"]
3200
[10'-6"]
3200
[10'-6"]
3200
[10'-6"]
3200
[10'-6"]
3200
[10'-6"]
2850
[9'-4"]
450
[1'-6"]
450
[1'-6"]
ROOF APEX LEVEL
+8069
ROOF BEAM LEVEL - 2
+6706
ROOF BEAM LEVEL - 1
+6150
1st FLOOR LEVEL
+3300
GROUND FLOOR
LEVEL +300
NATURAL GROUND
LEVEL 0.00
FOUNDATION
LEVEL - 1200
1363
[4'-6"]
556
[1'-10"]
2850
[9'-4"]
8069
[26'-6"]
3000
[9'-10"]
300
[1']
1200
[3'-11"]

ELEVATION E1

SCALE 1:100

Gdh.Hoandedhdhoo School 2 Classroom, ICT & Lab Block (2 story)
Client: Ministry of Education

Project Number: RI/2020/006
Date: March 2021
Architect : Mariyam Irasha Shareef
Engineer : Mohamed Muththalib Waleed
Drawn by : Mariyam Irasha Shareef
Services : Aishath Ahmed
Interior : -

Rev no	Date
--	-------------
--	-------------
--	-------------
--	-------------

RIYAN PRIVATE LIMITED

t : +9603315049 f : +9603310776
e : info@riyan.com.mv
w : www.riyan.com.mv
3rd floor, H. Azum, Ameeneemagu, Male'

Title: Elevation - E1
-

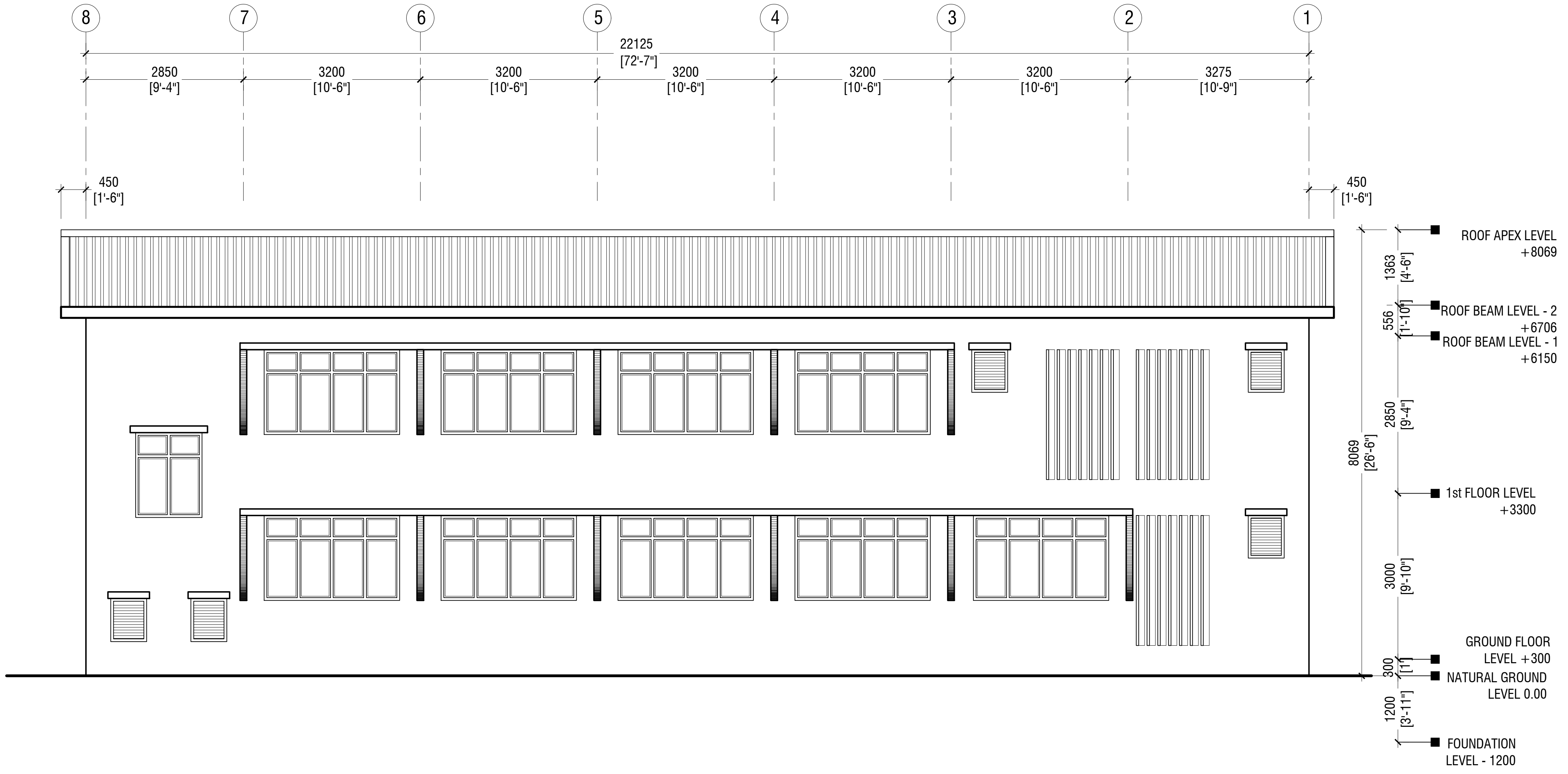
8
7
6
5
4
3
2
1
22125
[72'-7"]
2850
[9'-4"]
3200
[10'-6"]
3200
[10'-6"]
3200
[10'-6"]
3200
[10'-6"]
3200
[10'-6"]
3275
[10'-9"]
450
[1'-6"]
450
[1'-6"]
ROOF APEX LEVEL
+8069
ROOF BEAM LEVEL - 2
+6706
ROOF BEAM LEVEL - 1
+6150
1st FLOOR LEVEL
+3300
GROUND FLOOR
LEVEL +300
NATURAL GROUND
LEVEL 0.00
FOUNDATION
LEVEL - 1200
1363
[4'-6"]
556
[1'-10"]
2850
[9'-4"]
8069
[26'-6"]
3000
[9'-10"]
300
[1']
1200
[3'-11"]

ELEVATION E2

SCALE 1:100

0 0.5 1 2 3 4 5

Gdh.Hoandedhdhoo School 2 Classroom, ICT & Lab Block (2 story)
Client: Ministry of Education

Project Number: RI/2020/006
Date: March 2021
Architect : Mariyam Irasha Shareef
Engineer : Mohamed Muththalib Waleed
Drawn by : Mariyam Irasha Shareef
Services : Aishath Ahmed
Interior : -

Rev no	Date
--	----------------
--	----------------
--	----------------
--	----------------

RIYAN PRIVATE LIMITED

t : +9603315049 **f :** +9603310776
e : info@riyan.com.mv
w : www.riyan.com.mv
3rd floor, H. Azum, Ameeneemagu, Male'

Title: Elevation - E2
-

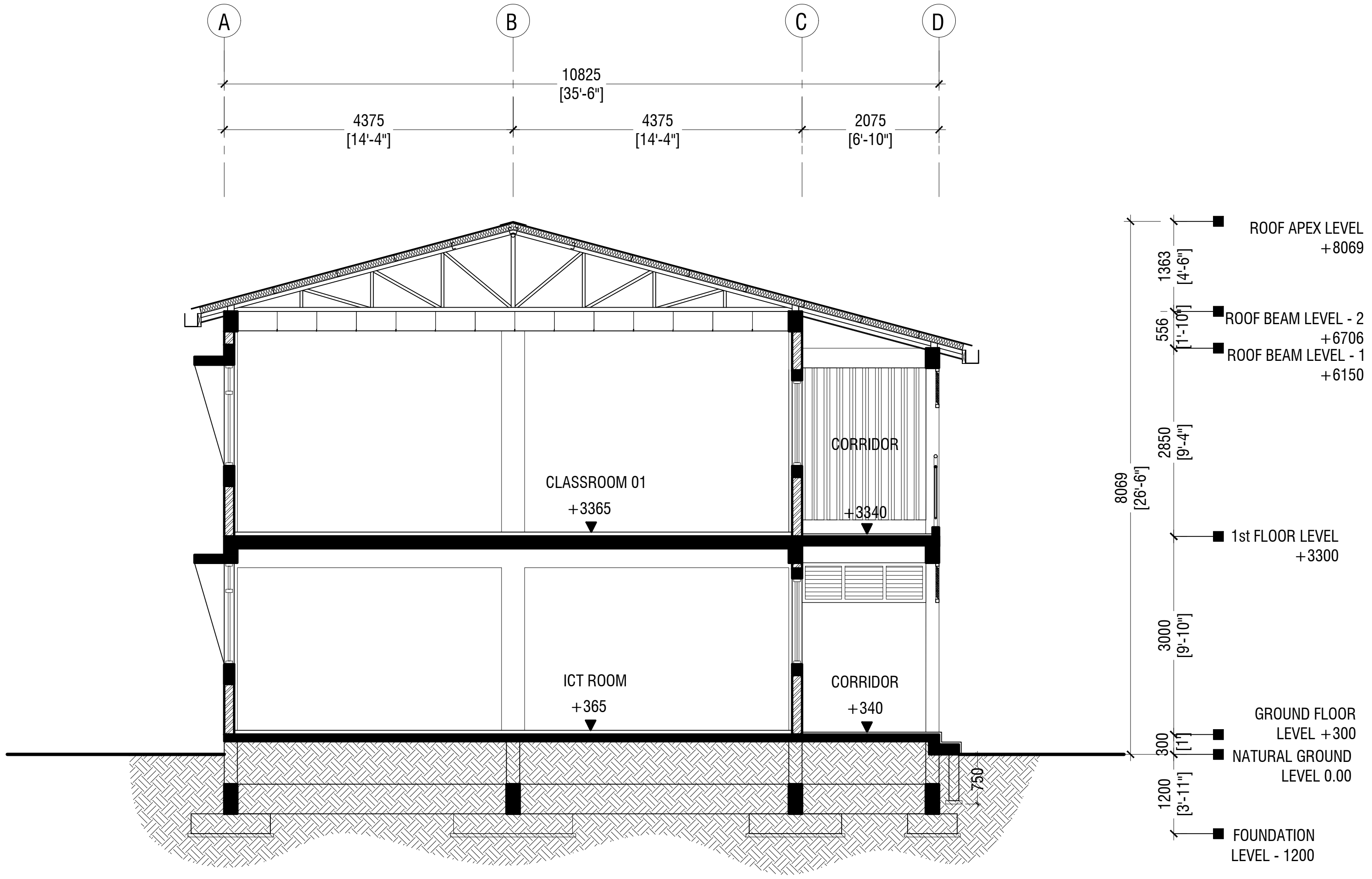
A
B
C
D
10825
[35'-6"]
4375
[14'-4"]
4375
[14'-4"]
2075
[6'-10"]
CORRIDOR
CLASSROOM 01
+3365
+3340
ICT ROOM
+365
CORRIDOR
+340
750
ROOF APEX LEVEL
+8069
ROOF BEAM LEVEL - 2
+6706
ROOF BEAM LEVEL - 1
+6150
1st FLOOR LEVEL
+3300
GROUND FLOOR
LEVEL +300
NATURAL GROUND
LEVEL 0.00
FOUNDATION
LEVEL - 1200
1363
[4'-6"]
556
[1'-10"]
2850
[9'-4"]
3000
[9'-10"]
300
[1']
1200
[3'-11"]
8069
[26'-6"]

SECTION X-X

SCALE 1:100

0 0.5 1 2 3 4 5

Gdh.Hoandedhdhoo School 2 Classroom, ICT & Lab Block (2 story)

Client: Ministry of Education

Project Number: RI/2020/006
Date: March 2021
Architect : Mariyam Irasha Shareef
Engineer : Mohamed Muththalib Waleed
Drawn by : Mariyam Irasha Shareef
Services : Aishath Ahmed
Interior : -

Rev no	Date
--	----------------
--	----------------
--	----------------
--	----------------

RIYAN PRIVATE LIMITED

t : +9603315049 f : +9603310776
e : info@riyan.com.mv
w : www.riyan.com.mv
3rd floor, H. Azum, Ameeneemagu, Male'

Title: Section X-X
-

Page: A-07/21

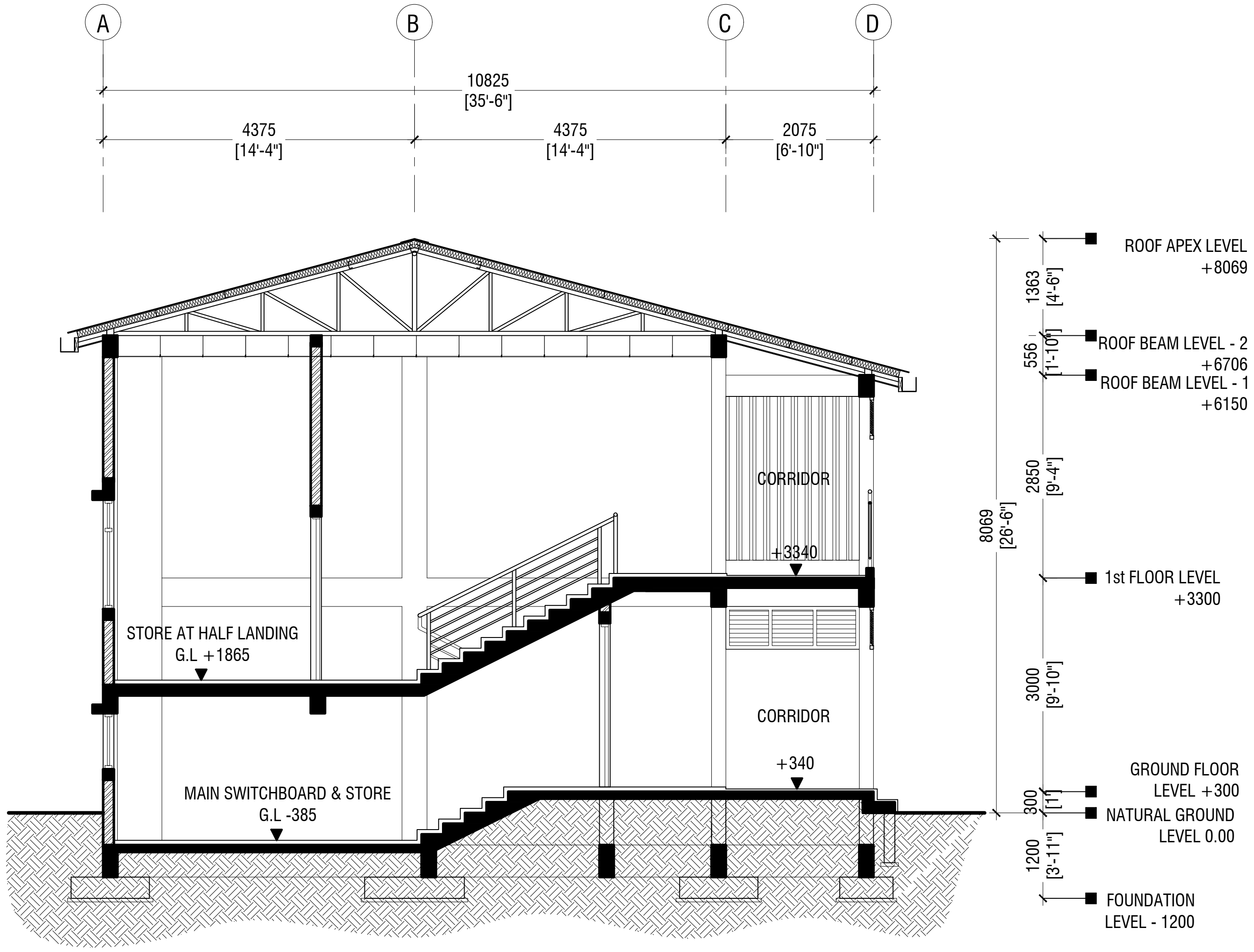
A
B
C
D
10825
[35'-6"]
4375
[14'-4"]
4375
[14'-4"]
2075
[6'-10"]
ROOF APEX LEVEL
+8069
ROOF BEAM LEVEL - 2
+6706
ROOF BEAM LEVEL - 1
+6150
1st FLOOR LEVEL
+3300
GROUND FLOOR
LEVEL +300
NATURAL GROUND
LEVEL 0.00
FOUNDATION
LEVEL - 1200
1363
[4'-6"]
556
[1'-10"]
2850
[9'-4"]
3000
[9'-10"]
300
[1']
1200
[3'-11"]
8069
[26'-6"]
CORRIDOR
+3340
CORRIDOR
+340
STORE AT HALF LANDING
G.L +1865
MAIN SWITCHBOARD & STORE
G.L -385

SECTION Y-Y

SCALE 1:100

Gdh.Hoandedhdhoo School 2 Classroom, ICT & Lab Block (2 story)
Client: Ministry of Education

Project Number: RI/2020/006
Date: March 2021
Architect : Mariyam Irasha Shareef
Engineer : Mohamed Muththalib Waleed
Drawn by : Mariyam Irasha Shareef
Services : Aishath Ahmed
Interior : -

Rev no	Date
--	------------
--	------------
--	------------
--	------------

RIYAN PRIVATE LIMITED

t : +9603315049 f : +9603310776
e : info@riyan.com.mv
w : www.riyan.com.mv
3rd floor, H. Azum, Ameeneemagu, Male'

Title: Section Y-Y

Page: A-08/21

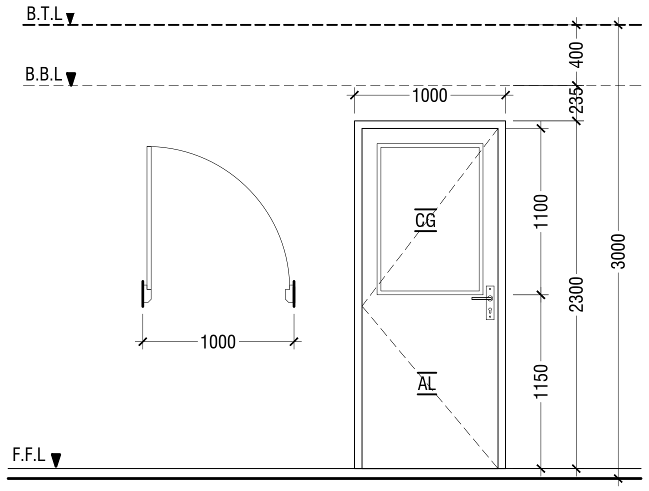
B.T.L
B.B.L
F.F.L
1000
1000
CG
AL
400
235
1100
1150
2300
3000

D1	SWING DOOR
REMARKS	50mm THICK WHITE POWDER COATED (60 MICRONS) ALUMINUM FRAMED WITH ALUMINIUM PANEL AND 6mm THICK CLEAR GLASS
LOCATION	CLASSROOMS & HALF LANDING STORE ROOM
QUANTITY	09 NOS
OPEN AREA	2.03 sqm

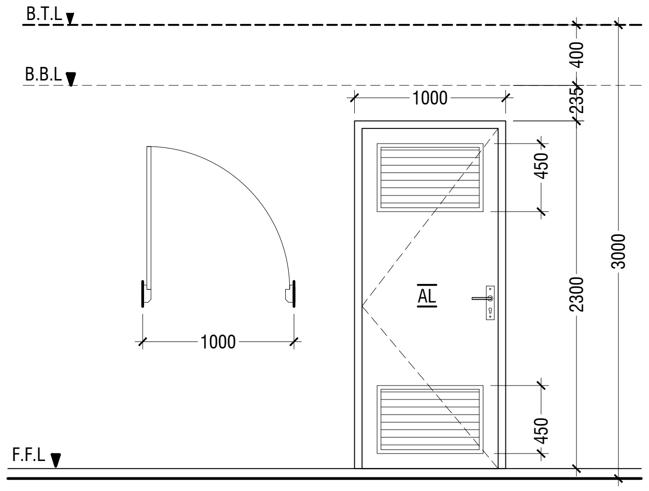
B.T.L
B.B.L
F.F.L
1000
1000
AL
450
450
400
235
2300
3000

D2	SWING DOOR WITH ALUMINIUM LOUVERS
REMARKS	50mm THICK WHITE POWDER COATED (60 MICRONS) ALUMINUM FRAMED WITH ALUMINIUM PANEL AND ALUMINUM LOUVERS
LOCATION	TOILETS & MAIN SWITCH BOARD STORE
QUANTITY	04 NOS
OPEN AREA	2.03 sqm

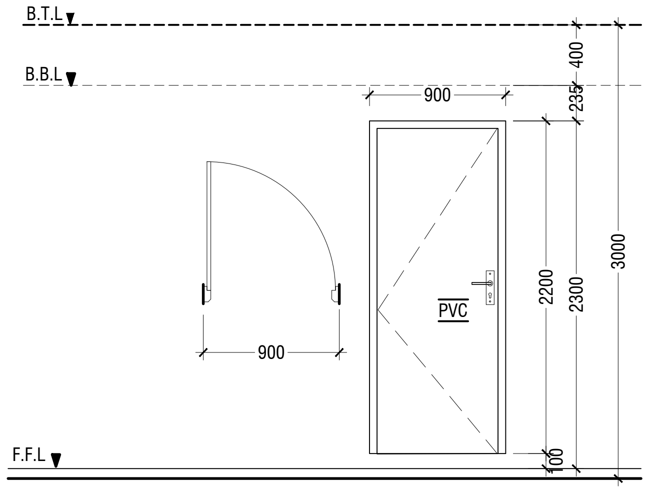
B.T.L
B.B.L
F.F.L
900
900
PVC
400
235
2200
2300
3000
100

D3	PVC SWING DOOR
REMARKS	PVC WHITE FRAME AND PANEL
LOCATION	STORE & CLEANER CLOSET
QUANTITY	02 NOS
OPEN AREA	1.72 SQM

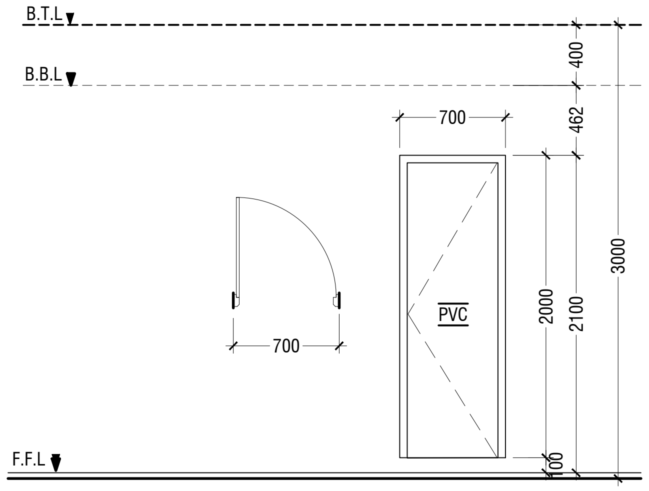
B.T.L
B.B.L
F.F.L
700
700
PVC
400
462
2000
2100
3000
100

D4	PVC SWING DOOR
REMARKS	PVC WHITE FRAME AND PANEL
LOCATION	TOILETS STALLS
QUANTITY	08 NOS
OPEN AREA	1.17 SQM

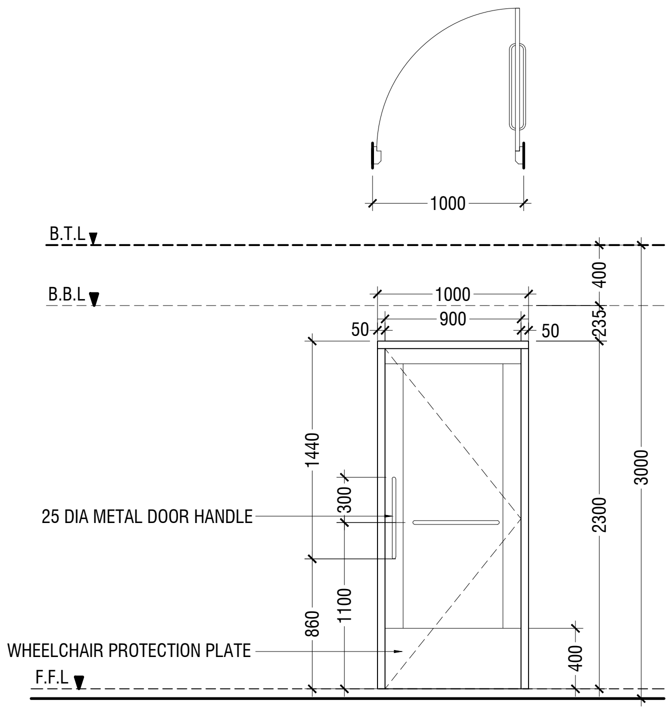
1000
B.T.L
B.B.L
F.F.L
1000
900
50
50
25 DIA METAL DOOR HANDLE
WHEELCHAIR PROTECTION PLATE
1440
300
1100
860
400
235
2300
3000
400

D5	SWING DOOR
REMARKS	50mm THICK WHITE POWDER COATED (60 MICRONS) ALUMINUM FRAMED WITH ALUMINIUM PANEL
LOCATION	DISABLED TOILET
QUANTITY	01 NOS
OPEN AREA	2.03 sqm

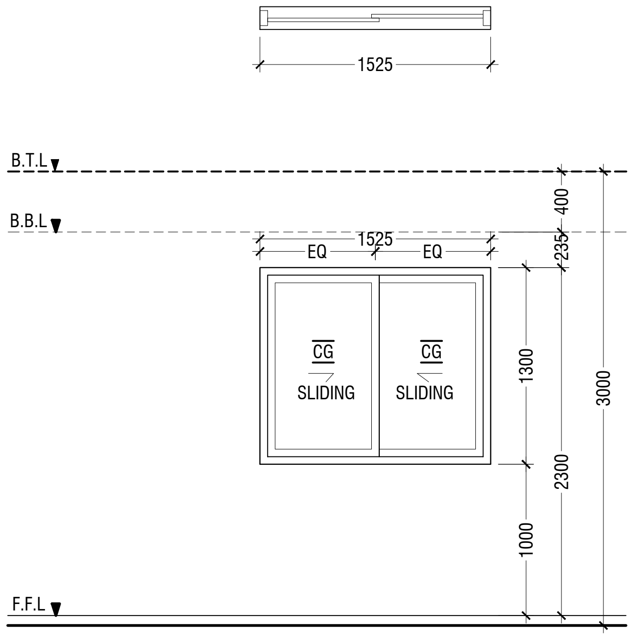
1525
B.T.L
B.B.L
F.F.L
1525
EQ
EQ
CG
SLIDING
CG
SLIDING
400
235
1300
2300
1000
3000

W1	SLIDING WINDOW
REMARKS	50mm THICK WHITE POWDER COATED (60 MICRONS) ALUMINUM FRAMED WITH ALUMINIUM PANEL AND 6mm THICK CLEAR GLASS
LOCATION	CLASSROOMS
QUANTITY	09 NOS
OPEN AREA	0.83 sqm

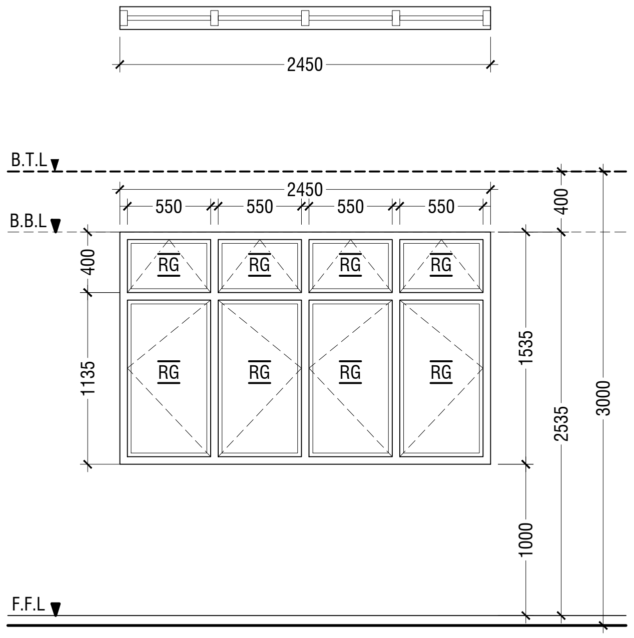
2450
B.T.L
B.B.L
F.F.L
2450
550
550
550
550
RG
400
1135
1535
2535
1000
3000
400

W2	SWING WINDOW
REMARKS	50mm THICK WHITE POWDER COATED (60 MICRONS) ALUMINUM FRAMED WINDOW WITH 6mm THICK REFLECTIVE GLASS
LOCATION	CLASSROOMS
QUANTITY	09 NOS
OPEN AREA	3.04 sqm

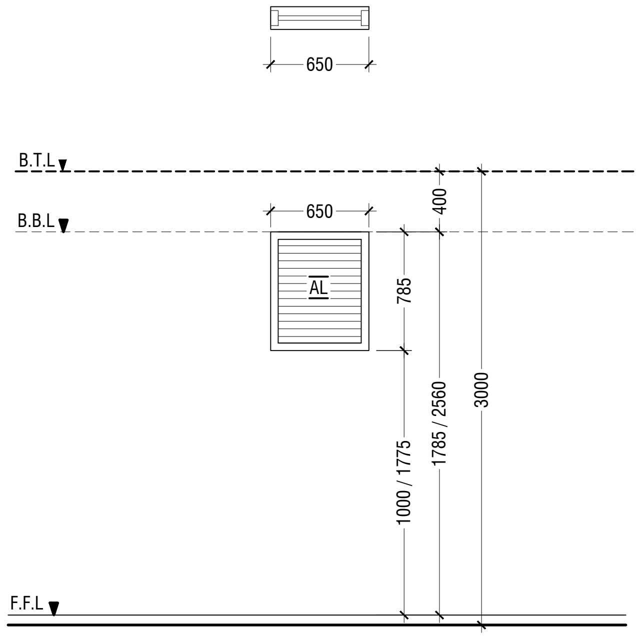
650
B.T.L
B.B.L
F.F.L
650
AL
400
785
1000 / 1775
1785 / 2560
3000

W3	WINDOW WITH ALUMINUM LOUVERS
REMARKS	50mm THICK WHITE POWDER COATED (60 MICRONS) ALUMINUM FRAMED WITH ALUMINUM LOUVERS
LOCATION	TOILETS & MAIN SWITCH BOARD STORE
QUANTITY	05 NOS
OPEN AREA	0.38 SQM

NOTE:-
1. FLOOR TO FLOOR HEIGHT VARIES AND WILL BE SUBJECTED TO CHANGES
2. MAINTAIN FLOOR TO WINDOW SILL STANDARD HEIGHT REGULATION OF 1M.
3, REFER TO ARCHITECT FOR FURTHER ASSISTANCE.
4. ALL DOORS & WINDOWS TO BE CHECKED ON SITE BEFORE FABRICATION.
5. ALL DOOR & WINDOWS VIEWED FROM EXTERIOR, FOR DOOR SWING, REFER TO FLOOR PLANS.
6. THE DOORS / WINDOWS WHICH DO NOT TOUCH THE BEAM SHALL HAVE A LINTEL BEAM (LB) ABOVE THE DOOR / WINDOW.
7. FOR ALL THE WINDOWS PUT A SILL BEAM BELOW THE WINDOW (SB)
8. FOR SAFETY PURPOSES REFER TO TECHNICAL SPECIFICATIONS FOR GLASS THICKNESS.

LEGEND:
CG - CLEAR GLASS
RG - REFLECTED GLASS
AL - ALUMINIUM
PVC - POLYVINYL CHLORIDE

DOOR & WINDOW SCHEDULE - 1

SCALE 1:50

0
0.25
0.5
1
1.5
2
2.5

Gdh.Hoandedhdhoo School 2 Classroom, ICT & Lab Block (2 story)
Client: Ministry of Education

Project Number: RI/2020/006
Date: March 2021
Architect : Mariyam Irasha Shareef
Engineer : Mohamed Muththalib Waleed
Drawn by : Mariyam Irasha Shareef
Services : Aishath Ahmed
Interior : -

Rev no	Date
--	------------
--	------------
--	------------
--	------------

RIYAN PRIVATE LIMITED
t : +9603315049 f : +9603310776
e : info@riyan.com.mv
w : www.riyan.com.mv
3rd floor, H. Azum, Ameeneemagu, Male'

Title: Door / Window Schedule - 1

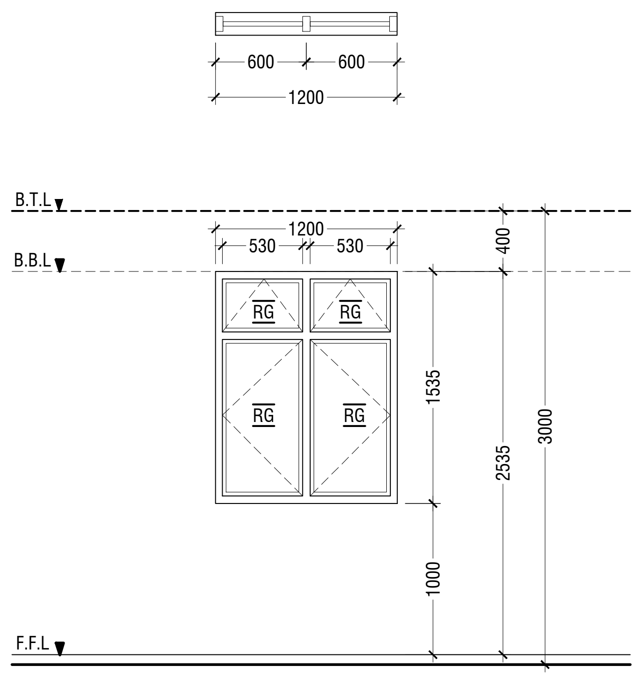
600
600
1200
B.T.L
B.B.L
1200
530
530
RG
RG
RG
RG
400
1535
2535
3000
1000
F.F.L

W4	SWING WINDOW
REMARKS	50mm THICK WHITE POWDER COATED (60 MICRONS) ALUMINUM FRAMED WINDOW WITH 6mm THICK REFLECTIVE GLASS
LOCATION	HALF LANDING STORE ROOM
QUANTITY	01 NOS
OPEN AREA	1.43 sqm

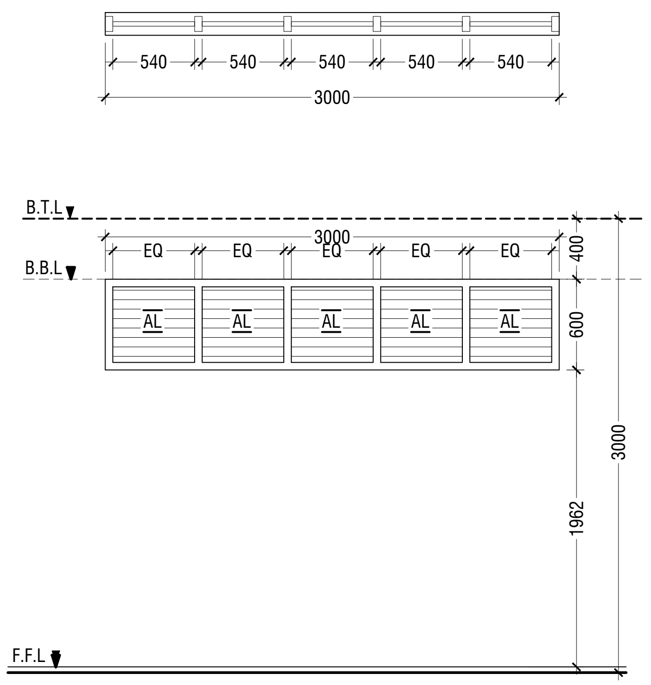
540
540
540
540
540
3000
B.T.L
B.B.L
3000
EQ
EQ
EQ
EQ
EQ
AL
AL
AL
AL
AL
400
600
1962
3000
F.F.L

V1	SUNSHADING
REMARKS	50mm THICK WHITE POWDER COATED (60 MICRONS) ALUMINUM FRAMED WITH ALUMINUM LOUVERS
LOCATION	CORRIDOR
QUANTITY	10 NOS
OPEN AREA	1.35 SQM

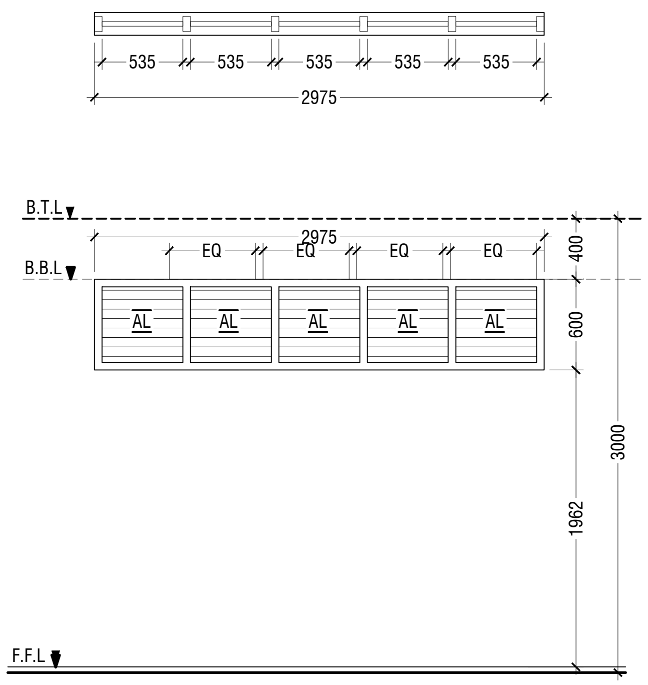
535
535
535
535
535
2975
B.T.L
B.B.L
2975
EQ
EQ
EQ
EQ
AL
AL
AL
AL
AL
400
600
1962
3000
F.F.L

V2	SUNSHADING
REMARKS	50mm THICK WHITE POWDER COATED (60 MICRONS) ALUMINUM FRAMED WITH ALUMINUM LOUVERS
LOCATION	CORRIDOR
QUANTITY	02 NOS
OPEN AREA	1.35 SQM

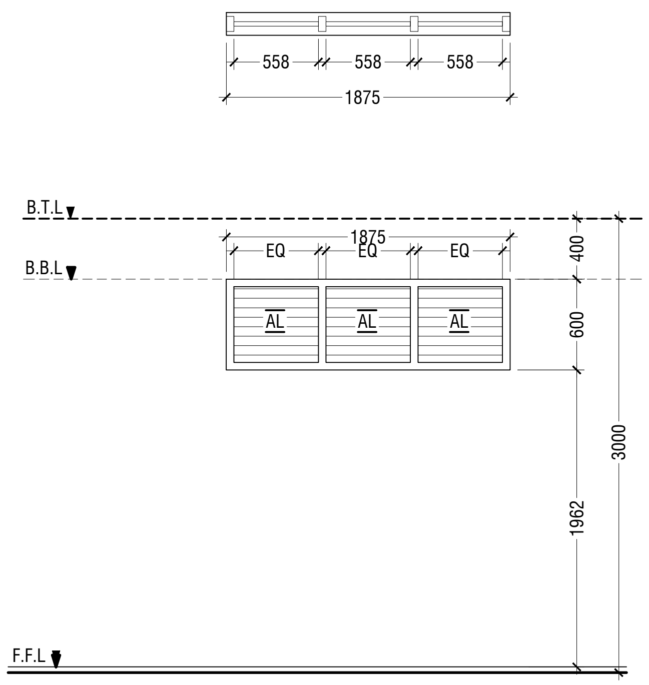
558
558
558
1875
B.T.L
B.B.L
1875
EQ
EQ
EQ
AL
AL
AL
400
600
1962
3000
F.F.L

V3	SUNSHADING
REMARKS	50mm THICK WHITE POWDER COATED (60 MICRONS) ALUMINUM FRAMED WITH ALUMINUM LOUVERS
LOCATION	CORRIDOR
QUANTITY	02 NOS
OPEN AREA	0.84 SQM

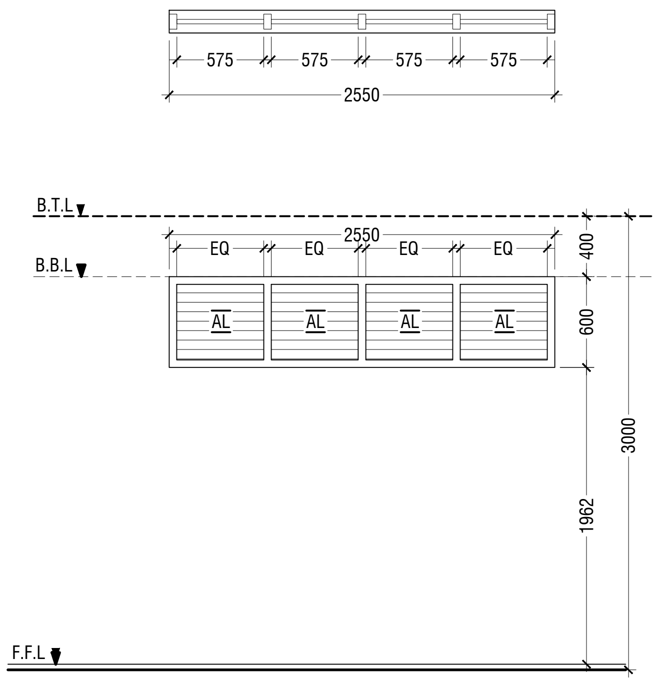
575
575
575
575
2550
B.T.L
B.B.L
2550
EQ
EQ
EQ
EQ
AL
AL
AL
AL
400
600
1962
3000
F.F.L

V4	SUNSHADING
REMARKS	50mm THICK WHITE POWDER COATED (60 MICRONS) ALUMINUM FRAMED WITH ALUMINUM LOUVERS
LOCATION	CORRIDOR
QUANTITY	02 NOS
OPEN AREA	1.15 SQM

LEGEND:
CG - CLEAR GLASS
RG - REFLECTED GLASS
AL - ALUMINIUM
PVC - POLYVINYL CHLORIDE

NOTE:-
1. FLOOR TO FLOOR HEIGHT VARIES AND WILL BE SUBJECTED TO CHANGES
2. MAINTAIN FLOOR TO WINDOW SILL STANDARD HEIGHT REGULATION OF 1M.
3, REFER TO ARCHITECT FOR FURTHER ASSISTANCE.
4. ALL DOORS & WINDOWS TO BE CHECKED ON SITE BEFORE FABRICATION.
5. ALL DOOR & WINDOWS VIEWED FROM EXTERIOR, FOR DOOR SWING, REFER TO FLOOR PLANS.
6. THE DOORS / WINDOWS WHICH DO NOT TOUCH THE BEAM SHALL HAVE A LINTEL BEAM (LB) ABOVE THE DOOR / WINDOW.
7. FOR ALL THE WINDOWS PUT A SILL BEAM BELOW THE WINDOW (SB)
8. FOR SAFETY PURPOSES REFER TO TECHNICAL SPECIFICATIONS FOR GLASS THICKNESS.

DOOR & WINDOW SCHEDULE - 2

SCALE 1:50

0 0.25 0.5 1 1.5 2 2.5

SCHEDULE OF VENTILATION FOR GDH.HODEHDHOO SCHOOL

Room name/ Number	Room Areas (sqm) (Specify centre to centre or clear)	Window (opening) number	Required opening areas (sqm)	Designed opening areas (sqm)	Open %
Ground Floor					
1 ICT Room	80.41	2W1, 2W2 & 2D1	8.04	11.66	14.50%
2 Lab	52.81	2W1, 2W2 & 2D1	5.28	11.66	22.08%
3 Toilet (F)	12.73		W3 & RC FINS		
4 Toilet for disabled	5.12		*Mechanical Ventilation*		
5 Main switchboard /store	11.25		*Mechanical Ventilation*		
First Floor					
1 Classroom 1	52.81	2W1, 2W2 & 2D1	5.28	11.66	22.08%
2 Classroom 2	52.81	2W1, 2W2 & 2D1	5.28	11.66	22.08%
3 Toilet (F)	16.24	W3 & RC FINS			
4 Toilet (M)	16.24	W3 & RC FINS			
5 Store at half landing level	7.22	W4	0.72	1.43	19.81%

VENTILATION SCHEDULE

NTS

Gdh.Hoandedhdhoo School 2 Classroom, ICT & Lab Block (2 story)
Client: Ministry of Education

Project Number: RI/2020/006
Date: March 2021
Architect : Mariyam Irasha Shareef
Engineer : Mohamed Muththalib Waleed
Drawn by : Mariyam Irasha Shareef
Services : Aishath Ahmed
Interior : -

Rev no	Date
--	------------
--	------------
--	------------
--	------------

RIYAN PRIVATE LIMITED

t : +9603315049 f : +9603310776
e : info@riyan.com.mv
w : www.riyan.com.mv
3rd floor, H. Azum, Ameeneemagu, Male'

Title: Door/Window Schedule 2 & Ventilation Schedule

Page: A-10/21

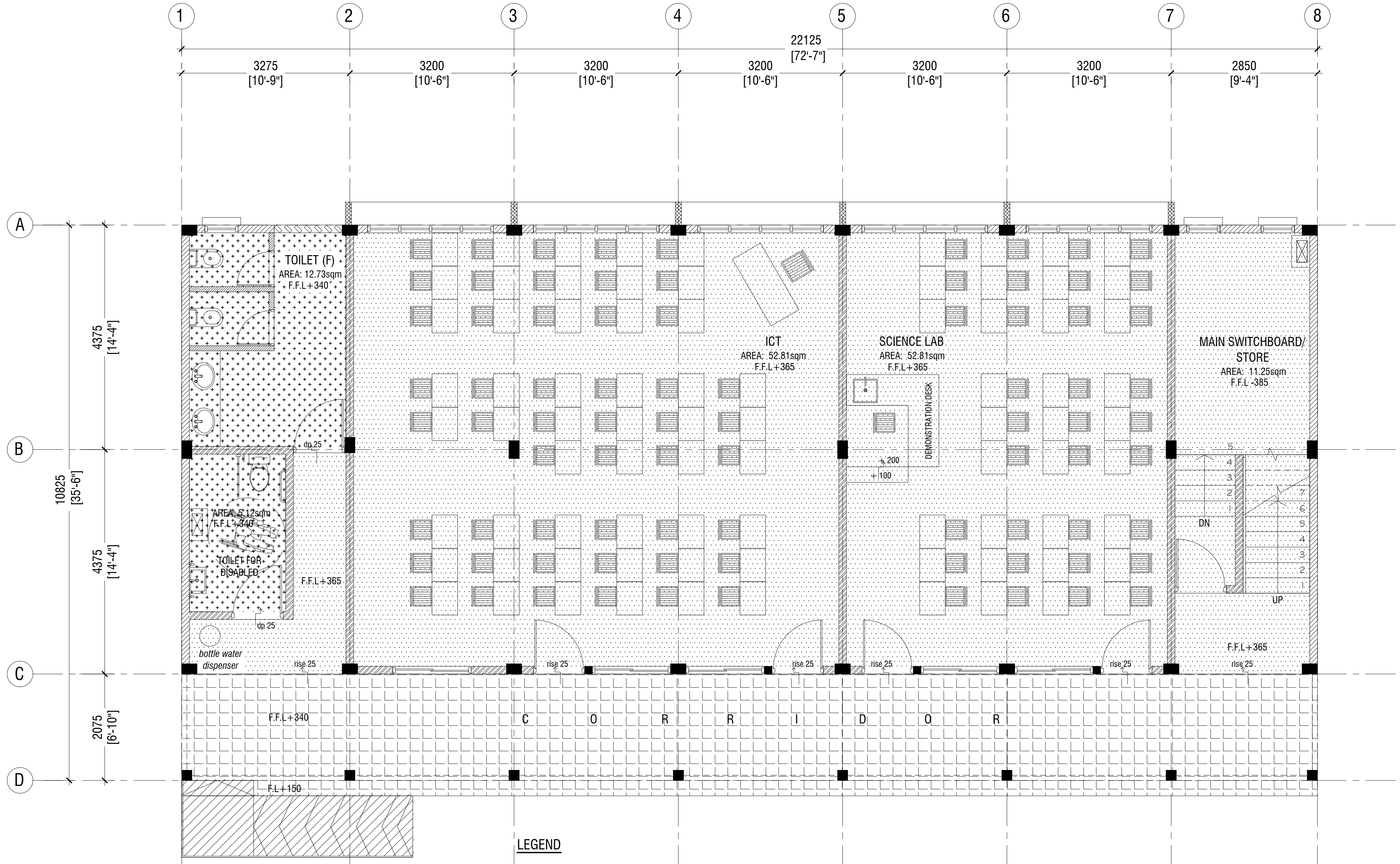
1
2
3
4
5
6
7
8
A
B
C
D
22125
[72'-7"]
3275
[10'-9"]
3200
[10'-6"]
2850
[9'-4"]
4375
[14'-4"]
10825
[35'-6"]
2075
[6'-10"]
TOILET (F)
AREA: 12.73sqm
F.F.L+340
ICT
AREA: 52.81sqm
F.F.L+365
SCIENCE LAB
AREA: 52.81sqm
F.F.L+365
MAIN SWITCHBOARD/
STORE
AREA: 11.25sqm
F.F.L -385
DEMONSTRATION DESK
200
100
AREA: 5.12sqm
F.F.L+340
TOILET FOR
DISABLED
F.F.L+365
dp 25
bottle water
dispenser
rise 25
DN
UP
F.F.L+365
C O R R I D O R
F.F.L+340
F.L+150

LEGEND

CODE	DESCRIPTION
░	600X600mm HOMOGENOUS NON-SLIP TILES OVER 50mm SCREEDING
▨	2.5mm SELF LEVELING CEMENT WITH EPOXY FLOOR PAINT (2 COATS OF EPOXY)
⁘	300X300mm HOMOGENOUS NON-SLIP TILES OVER 25mm SCREEDING
▦	600X600mm HOMOGENOUS NON-SLIP TILES OVER 25mm SCREEDING (CEMENTITIOUS WATERPROOFING: MASTERPEL 588 OR EQUIVALENT ON TOP OF THE SLAB)

GROUND FLOOR
FLOOR FINISHES PLAN

SCALE 1:100

0 0.5 1 2 3 4 5

Gdh.Hoandedhdhoo School 2 Classroom, ICT & Lab Block (2 story)
Client: Ministry of Education

Project Number: RI/2020/006
Date: March 2021
Architect : Mariyam Irasha Shareef
Engineer : Mohamed Muththalib Waleed
Drawn by : Mariyam Irasha Shareef
Services : Aishath Ahmed
Interior : -

Rev no	Date
--	------------
--	------------
--	------------
--	------------

RIYAN PRIVATE LIMITED

t : +9603315049 f : +9603310776
e : info@riyan.com.mv
w : www.riyan.com.mv
3rd floor, H. Azum, Ameeneemagu, Male'

Title: Ground Floor
Floor Finish Plan

Page: A-11/21

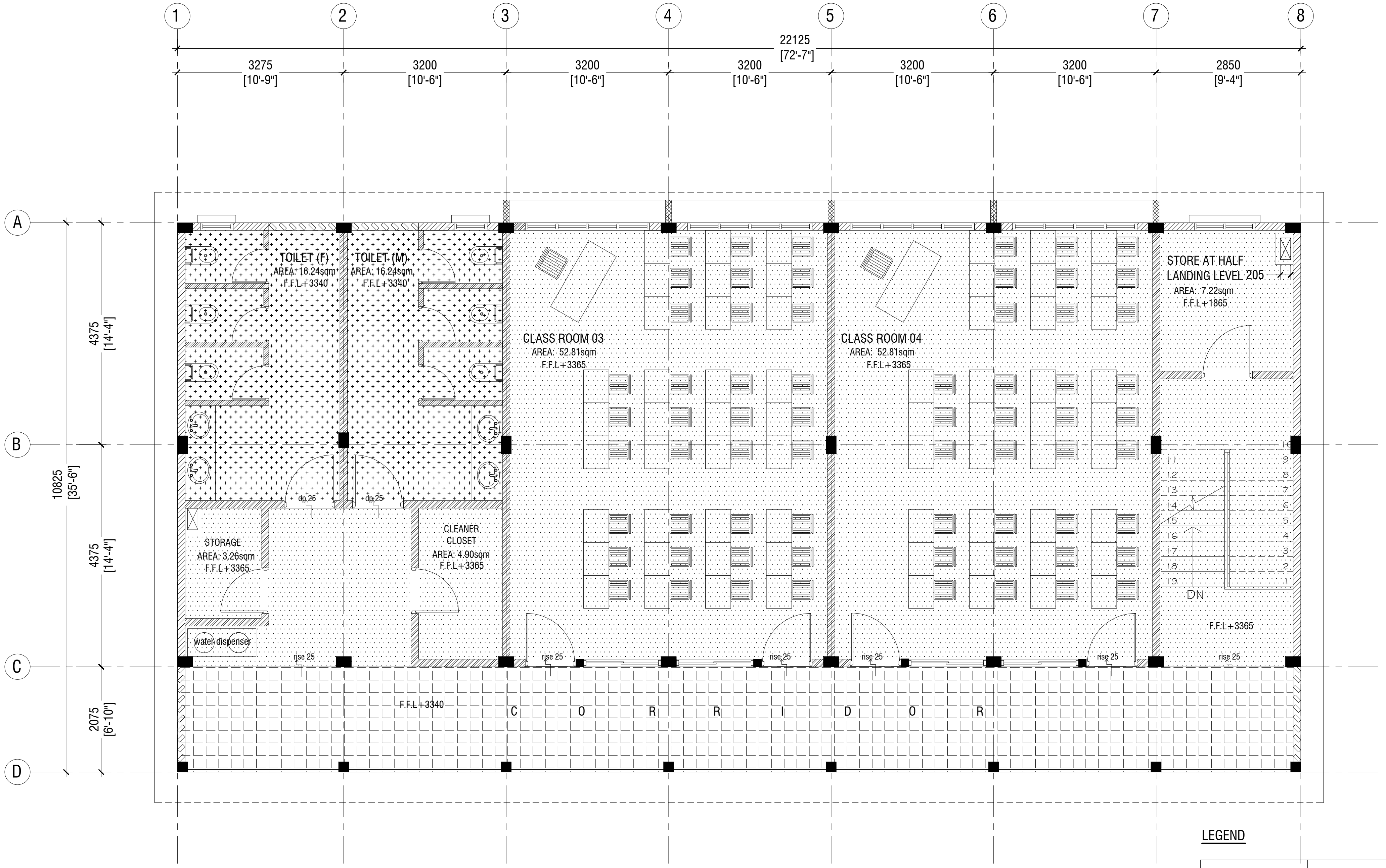
1
2
3
4
5
6
7
8
22125
[72'-7"]
3275
[10'-9"]
3200
[10'-6"]
3200
[10'-6"]
3200
[10'-6"]
3200
[10'-6"]
3200
[10'-6"]
2850
[9'-4"]
A
B
C
D
4375
[14'-4"]
10825
[35'-6"]
4375
[14'-4"]
2075
[6'-10"]
TOILET (F)
AREA: 16.24sqm
F.F.L+3340
TOILET (M)
AREA: 16.24sqm
F.F.L+3340
dp 25
dp 25
STORAGE
AREA: 3.26sqm
F.F.L+3365
CLEANER
CLOSET
AREA: 4.90sqm
F.F.L+3365
water dispenser
rise 25
CLASS ROOM 03
AREA: 52.81sqm
F.F.L+3365
CLASS ROOM 04
AREA: 52.81sqm
F.F.L+3365
STORE AT HALF
LANDING LEVEL 205
AREA: 7.22sqm
F.F.L+1865
1
2
3
4
5
6
7
8
9
10
11
12
13
14
15
16
17
18
19
DN
F.F.L+3365
rise 25
rise 25
rise 25
rise 25
rise 25
rise 25
F.F.L+3340
C O R R I D O R

LEGEND

CODE	DESCRIPTION
░	600X600mm HOMOGENOUS NON-SLIP TILES OVER 50mm SCREEDING
⁘	300X300mm HOMOGENOUS NON-SLIP TILES OVER 25mm SCREEDING
▦	600X600mm HOMOGENOUS NON-SLIP TILES OVER 25mm SCREEDING (CEMENTITIOUS WATERPROOFING: MASTERPEL 588 OR EQUIVALENT ON TOP OF THE SLAB)

FIRST FLOOR
FLOOR FINISHES PLAN

SCALE 1:100

0 0.5 1 2 3 4 5

Gdh.Hoandedhdhoo School 2 Classroom, ICT & Lab Block (2 story)
Client: Ministry of Education

Project Number: RI/2020/006
Date: March 2021
Architect : Mariyam Irasha Shareef
Engineer : Mohamed Muththalib Waleed
Drawn by : Mariyam Irasha Shareef
Services : Aishath Ahmed
Interior : -

Rev no	Date
--	------------
--	------------
--	------------
--	------------

RIYAN PRIVATE LIMITED

t : +9603315049 f : +9603310776
e : info@riyan.com.mv
w : www.riyan.com.mv
3rd floor, H. Azum, Ameeneemagu, Male'

Title: First Floor
Floor Finish Plan

Page: A-12/21

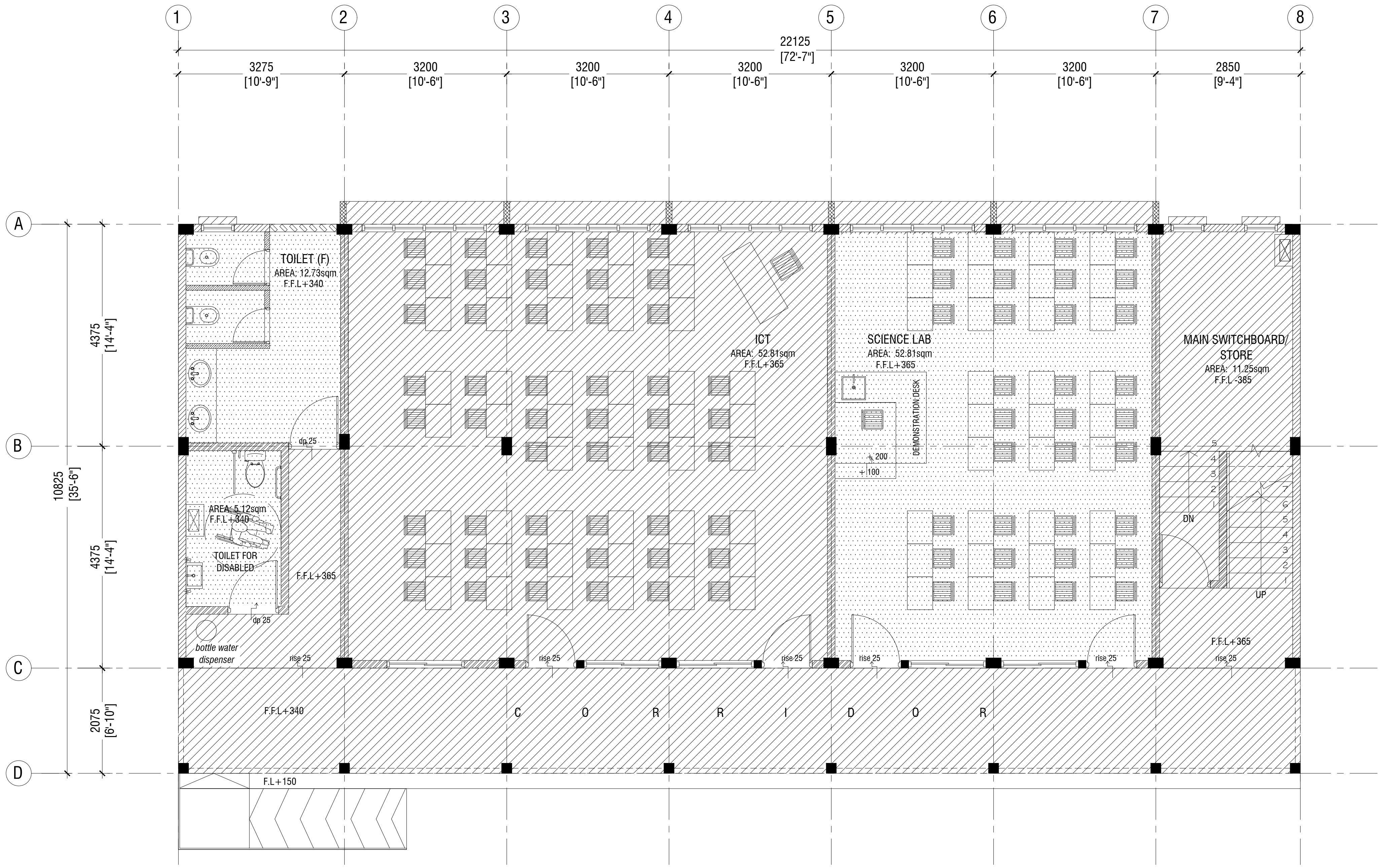
1
2
3
4
5
6
7
8
22125
[72'-7"]
3275
[10'-9"]
3200
[10'-6"]
3200
[10'-6"]
3200
[10'-6"]
3200
[10'-6"]
3200
[10'-6"]
2850
[9'-4"]
A
B
C
D
4375
[14'-4"]
10825
[35'-6"]
4375
[14'-4"]
2075
[6'-10"]
TOILET (F)
AREA: 12.73sqm
F.F.L+340
dp 25
AREA: 5.12sqm
F.F.L+340
TOILET FOR
DISABLED
F.F.L+365
dp 25
bottle water
dispenser
rise 25
ICT
AREA: 52.81sqm
F.F.L+365
SCIENCE LAB
AREA: 52.81sqm
F.F.L+365
DEMONSTRATION DESK
+200
+100
MAIN SWITCHBOARD/
STORE
AREA: 11.25sqm
F.F.L -385
5
4
3
2
1
DN
7
6
5
4
3
2
1
UP
F.F.L+365
rise 25
rise 25
rise 25
rise 25
rise 25
rise 25
F.F.L+340
C O R R I D O R
F.L+150

LEGEND

CODE	DESCRIPTION
▨	EXPOSED SLAB SOFFIT TO BE GROUND SMOOTH IN SELECT PAINT FINISH (ONE COAT OF PUTTY FOLLOWED BY SEALER AND 2 COATS OF PAINT)
░	6mm THICK CEMENT BOARD ON ROOF EAVE/GABLE CEILING (ONE COAT OF PUTTY FOLLOWED BY SEALER AND 2 COATS OF PAINT)

GROUND FLOOR REFLECTED CEILING PLAN

SCALE 1:100

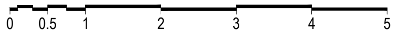

Gdh.Hoandedhdhoo School 2 Classroom, ICT & Lab Block (2 story)
Client: Ministry of Education

Project Number: RI/2020/006
Date: March 2021
Architect : Mariyam Irasha Shareef
Engineer : Mohamed Muththalib Waleed
Drawn by : Mariyam Irasha Shareef
Services : Aishath Ahmed
Interior : -

Rev no	Date
--	-------------
--	-------------
--	-------------
--	-------------

RIYAN PRIVATE LIMITED

t : +9603315049 f : +9603310776
e : info@riyan.com.mv
w : www.riyan.com.mv
3rd floor, H. Azum, Ameeneemagu, Male'

Title: Ground Floor Reflected Ceiling Plan

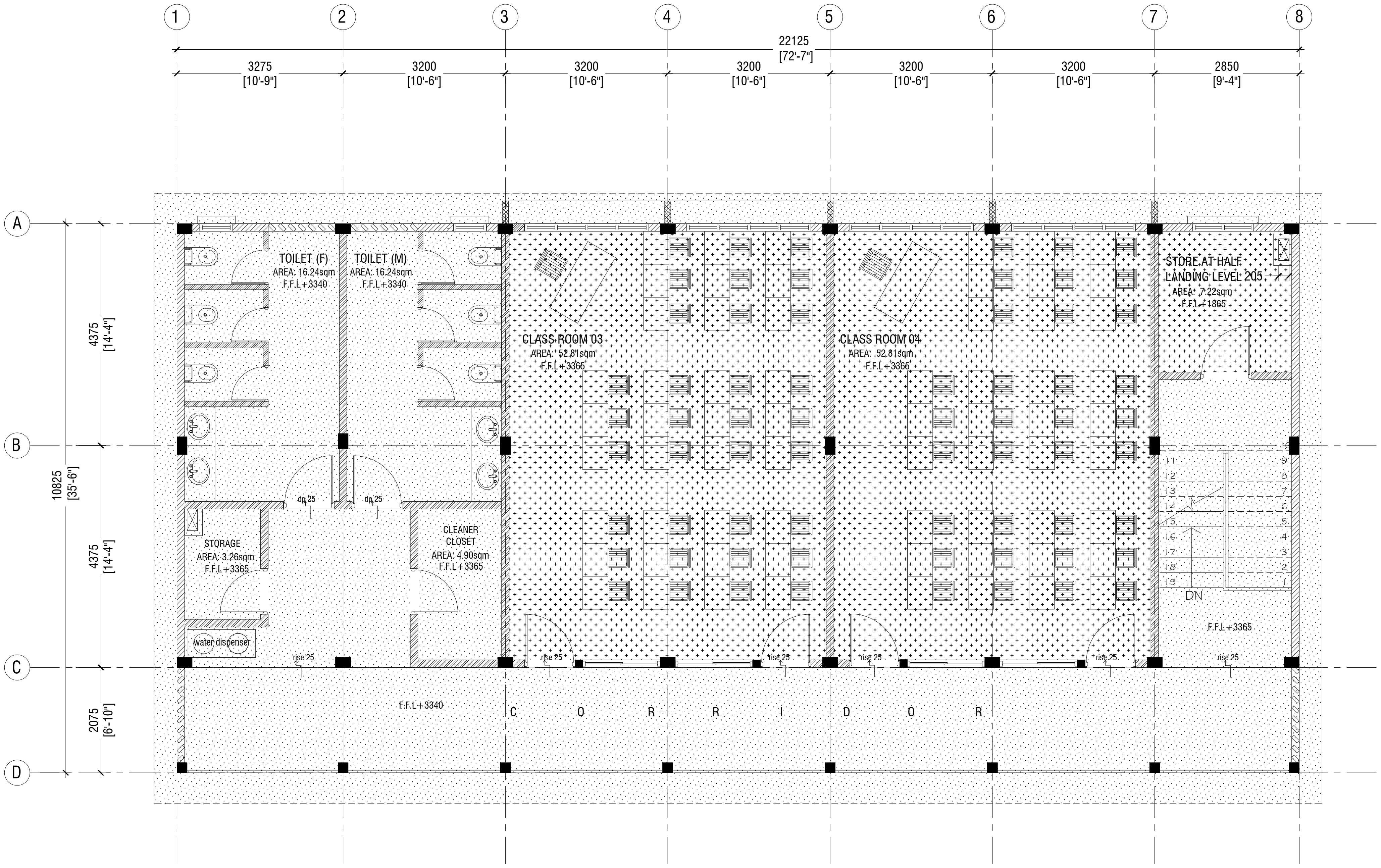
1
2
3
4
5
6
7
8
22125
[72'-7"]
3275
[10'-9"]
3200
[10'-6"]
3200
[10'-6"]
3200
[10'-6"]
3200
[10'-6"]
3200
[10'-6"]
2850
[9'-4"]
A
B
C
D
4375
[14'-4"]
10825
[35'-6"]
4375
[14'-4"]
2075
[6'-10"]
TOILET (F)
AREA: 16.24sqm
F.F.L+3340
TOILET (M)
AREA: 16.24sqm
F.F.L+3340
CLASS ROOM 03
AREA: 52.81sqm
F.F.L+3365
CLASS ROOM 04
AREA: 52.81sqm
F.F.L+3365
STORE AT HALF LANDING LEVEL 205
AREA: 7.22sqm
F.F.L+1865
dn 25
dn 25
STORAGE
AREA: 3.26sqm
F.F.L+3365
CLEANER CLOSET
AREA: 4.90sqm
F.F.L+3365
water dispenser
rise 25
rise 25
rise 25
rise 25
rise 25
rise 25
DN
F.F.L+3365
F.F.L+3340
CORRIDOR

FIRST FLOOR
REFLECTED CEILING PLAN

SCALE 1:100

0 0.5 1 2 3 4 5

LEGEND

CODE	DESCRIPTION
▒	9mm THICK FIXED CEILING 'BORAL' OR EQUIVALENT PLASTERBOARD CEILING SYSTEM WITH TIMBER FRAMES, APPLIED WITH GROUND SMOOTH FINISH IN SELECTED PAINT
░	6mm THICK CEMENT BOARD ON ROOF EAVE/GABLE CEILING (ONE COAT OF PUTTY FOLLOWED BY SEALER AND 2 COATS OF PAINT)

Gdh.Hoandedhdhoo School 2 Classroom, ICT & Lab Block (2 story)
Client: Ministry of Education

Project Number: RI/2020/006
Date: March 2021
Architect : Mariyam Irasha Shareef
Engineer : Mohamed Muththalib Waleed
Drawn by : Mariyam Irasha Shareef
Services : Aishath Ahmed
Interior : -

Rev no	Date
--	------------
--	------------
--	------------
--	------------

RIYAN PRIVATE LIMITED

t : +9603315049 f : +9603310776
e : info@riyan.com.mv
w : www.riyan.com.mv
3rd floor, H. Azum, Ameeneemagu, Male'

Title: First Floor Reflected Ceiling Plan

Page: A-14/21

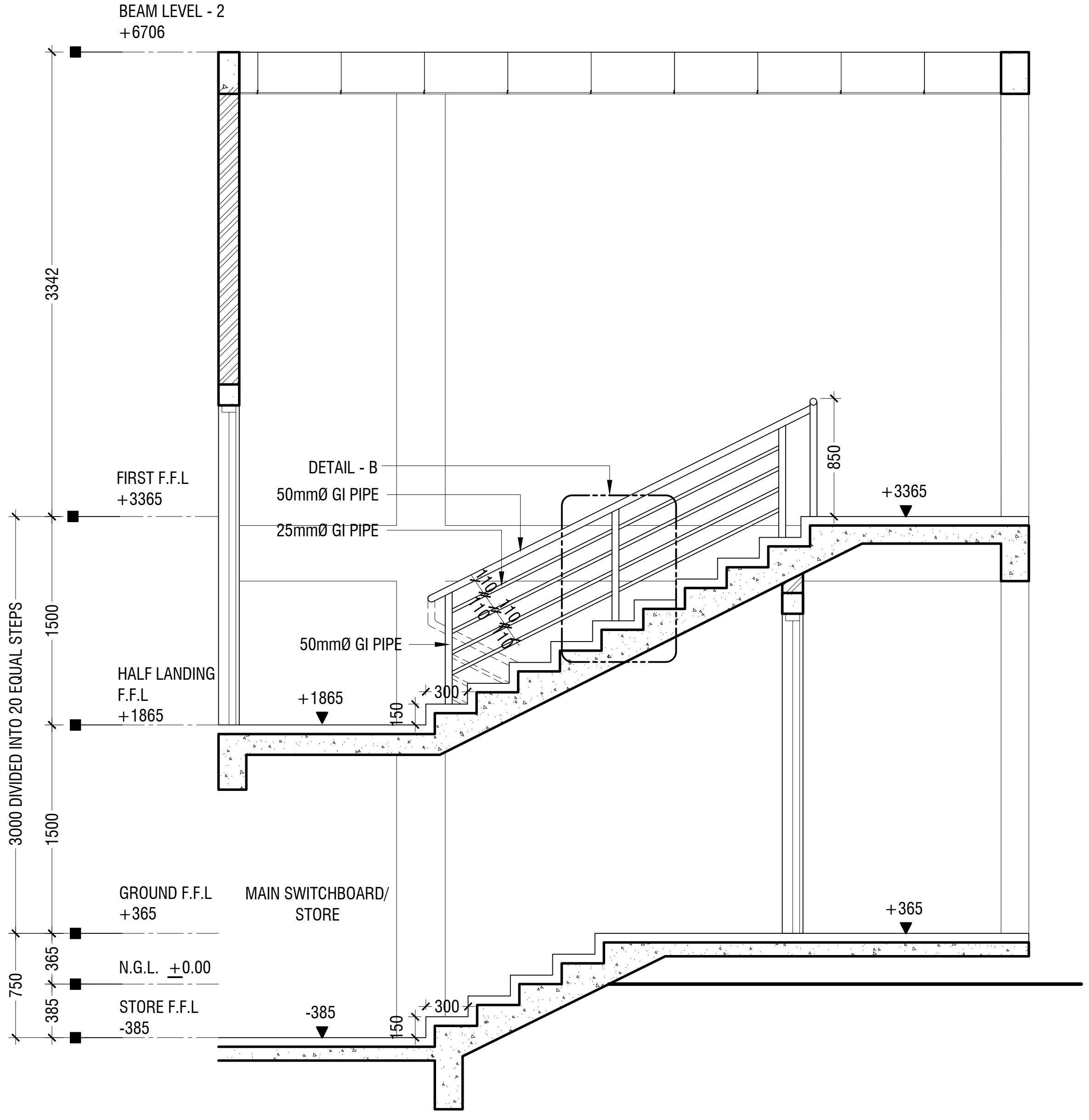
BEAM LEVEL - 2
+6706
3342
FIRST F.F.L
+3365
DETAIL - B
50mmØ GI PIPE
25mmØ GI PIPE
850
+3365
3000 DIVIDED INTO 20 EQUAL STEPS
1500
1500
50mmØ GI PIPE
HALF LANDING
F.F.L
+1865
+1865
300
150
GROUND F.F.L
+365
MAIN SWITCHBOARD/
STORE
+365
750
365
N.G.L. ±0.00
385
STORE F.F.L
-385
-385
300
150

SECTION A-A

SCALE 1:50

0 0.25 0.5 1 1.5 2 2.5

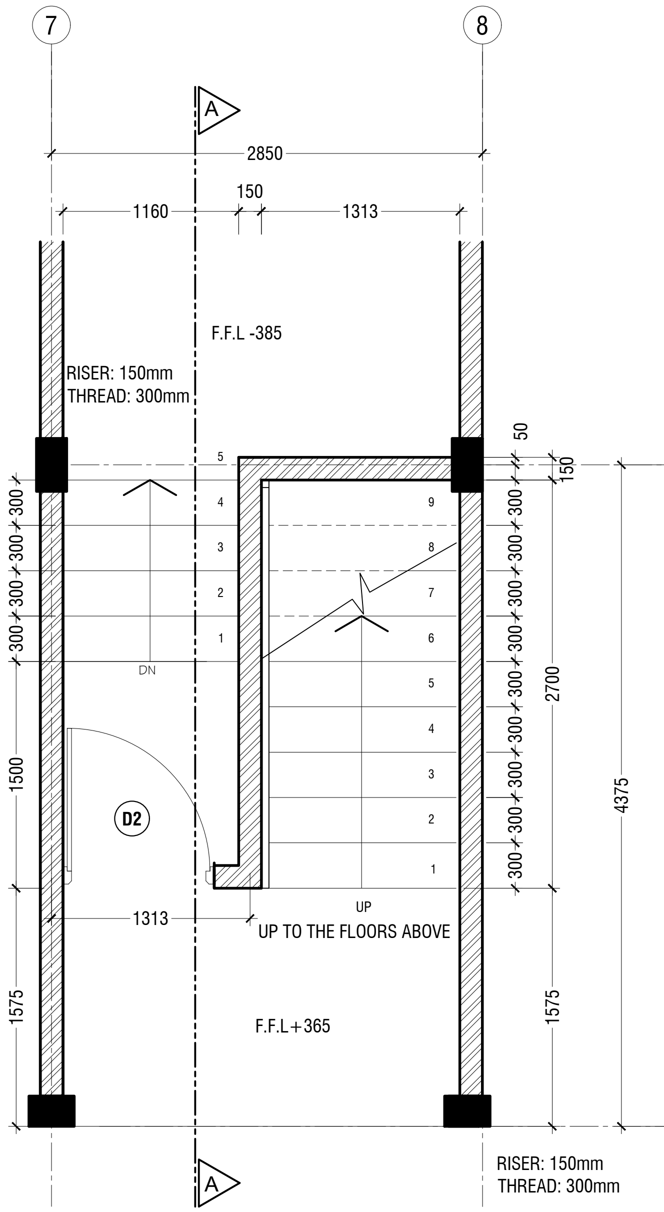
7
8
A
2850
1160
150
1313
F.F.L -385
RISER: 150mm
THREAD: 300mm
300
1500
1575
DN
D2
1313
UP
UP TO THE FLOORS ABOVE
F.F.L+365
50
150
2700
4375
1575
RISER: 150mm
THREAD: 300mm
A

GROUND FLOOR STAIRCASE PLAN

SCALE 1:50

0 0.25 0.5 1 1.5 2 2.5

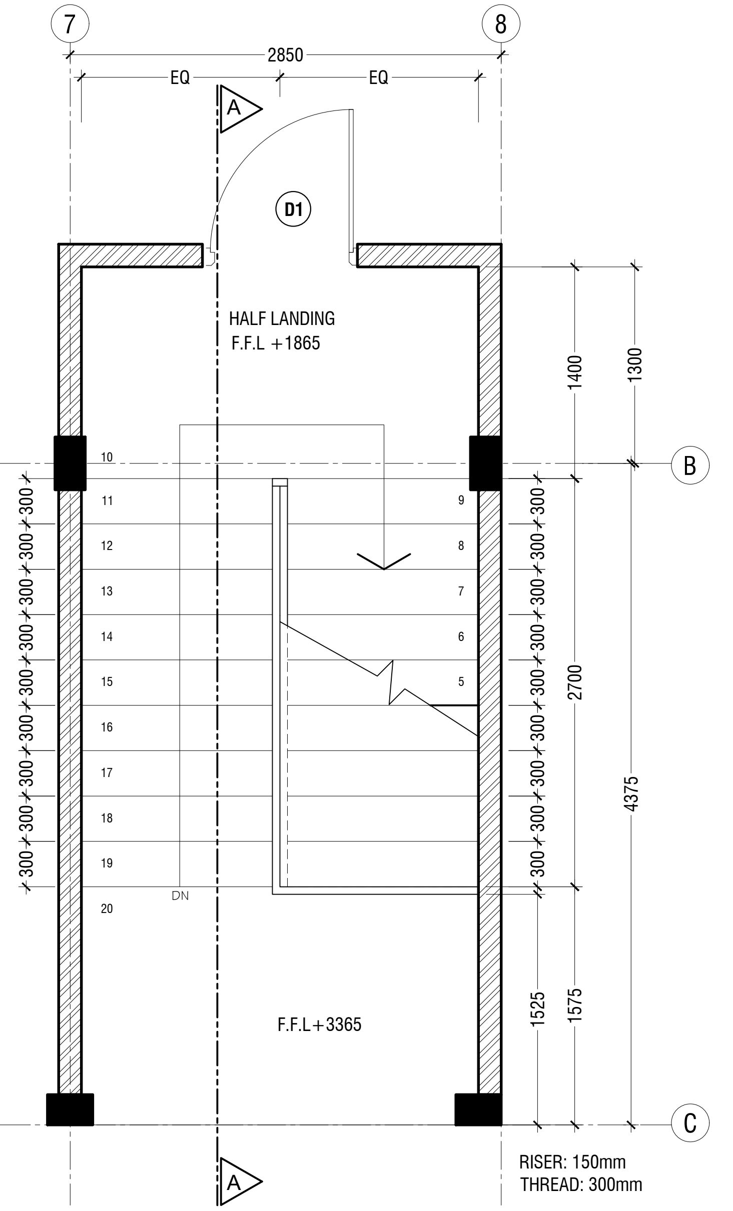
7
8
2850
EQ
EQ
A
D1
HALF LANDING
F.F.L +1865
1400
1300
B
B
DN
2700
4375
F.F.L+3365
1525
1575
C
C
RISER: 150mm
THREAD: 300mm
A

TYPICAL STAIRCASE PLAN

SCALE 1:50

0 0.25 0.5 1 1.5 2 2.5

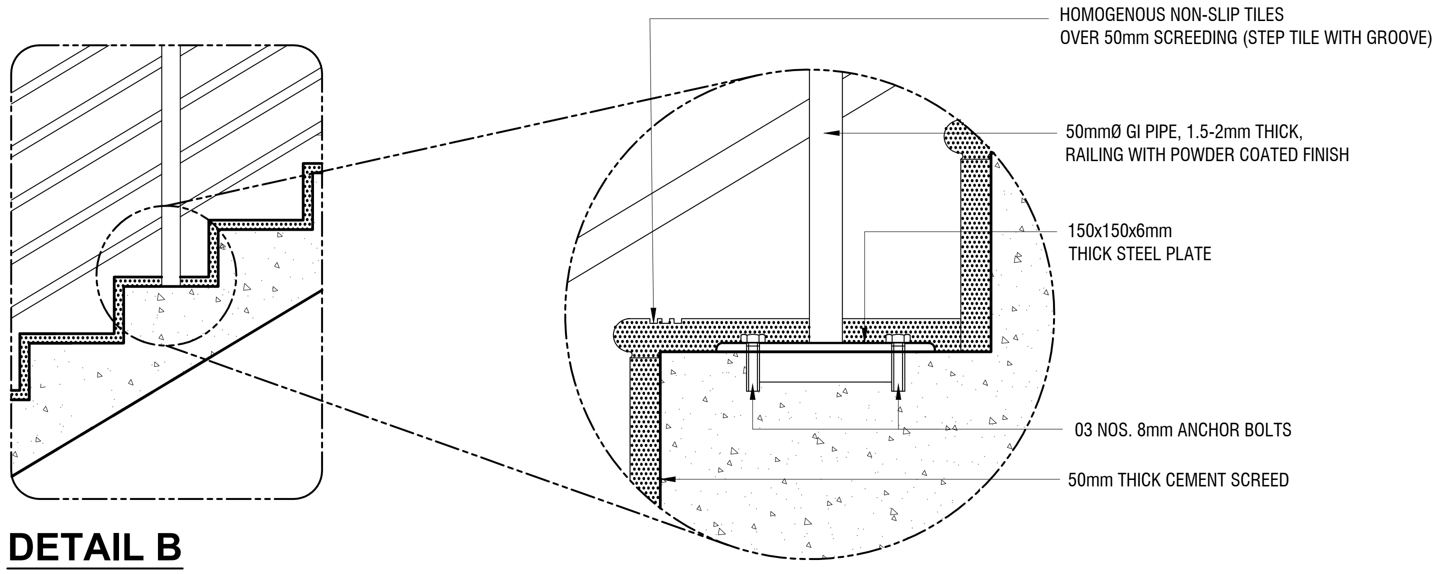
HOMOGENOUS NON-SLIP TILES
OVER 50mm SCREEDING (STEP TILE WITH GROOVE)
50mmØ GI PIPE, 1.5-2mm THICK,
RAILING WITH POWDER COATED FINISH
150x150x6mm
THICK STEEL PLATE
03 NOS. 8mm ANCHOR BOLTS
50mm THICK CEMENT SCREED

DETAIL B

SCALE 1:20

0 0.1 0.2 0.4 0.6 0.8 1

DETAIL - 1

STAIRCASE DETAILS

SCALE 1:20

0 0.1 0.2 0.4 0.6 0.8 1

Gdh.Hoandedhdhoo School 2 Classroom, ICT & Lab Block (2 story)
Client: Ministry of Education

Project Number: RI/2020/006
Date: March 2021
Architect : Mariyam Irasha Shareef
Engineer : Mohamed Muththalib Waleed
Drawn by : Mariyam Irasha Shareef
Services : Aishath Ahmed
Interior : -

Rev no	Date
--	----------
--	----------
--	----------
--	----------

RIYAN PRIVATE LIMITED
t : +9603315049 f : +9603310776
e : info@riyan.com.mv
w : www.riyan.com.mv
3rd floor, H. Azum, Ameeneemagu, Male'

Title: Staircase Details

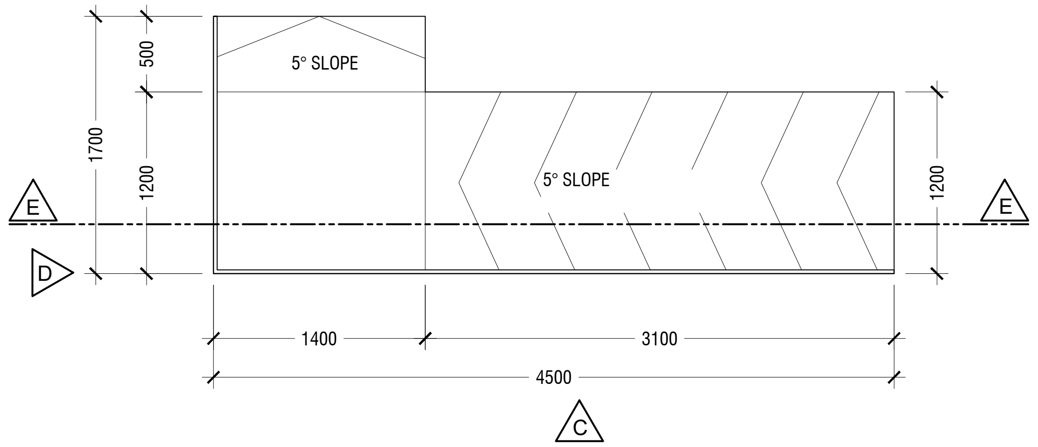
500
1700
1200
5° SLOPE
5° SLOPE
1200
E
E
D
1400
3100
4500
C

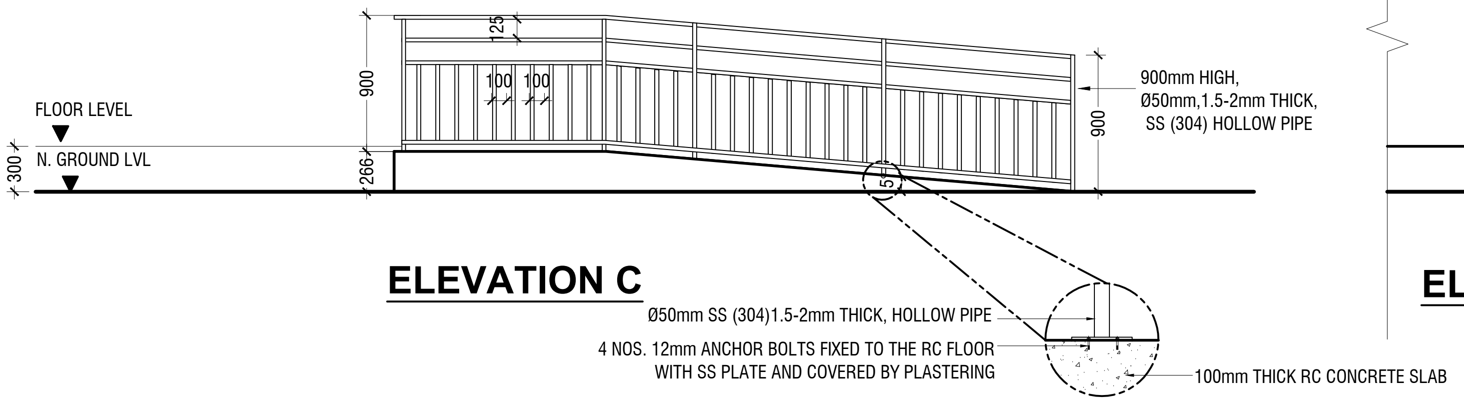
FLOOR LEVEL
N. GROUND LVL
300
900
266
125
100
100
900
900mm HIGH,
Ø50mm,1.5-2mm THICK,
SS (304) HOLLOW PIPE
5
Ø50mm SS (304)1.5-2mm THICK, HOLLOW PIPE
4 NOS. 12mm ANCHOR BOLTS FIXED TO THE RC FLOOR
WITH SS PLATE AND COVERED BY PLASTERING
100mm THICK RC CONCRETE SLAB

ELEVATION C

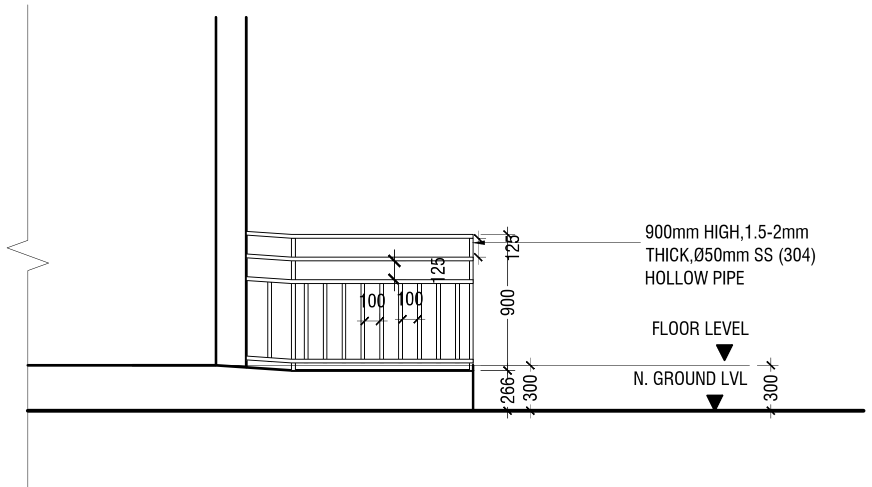
900mm HIGH,1.5-2mm
THICK,Ø50mm SS (304)
HOLLOW PIPE
125
125
100
100
900
FLOOR LEVEL
N. GROUND LVL
266
300
300

ELEVATION D

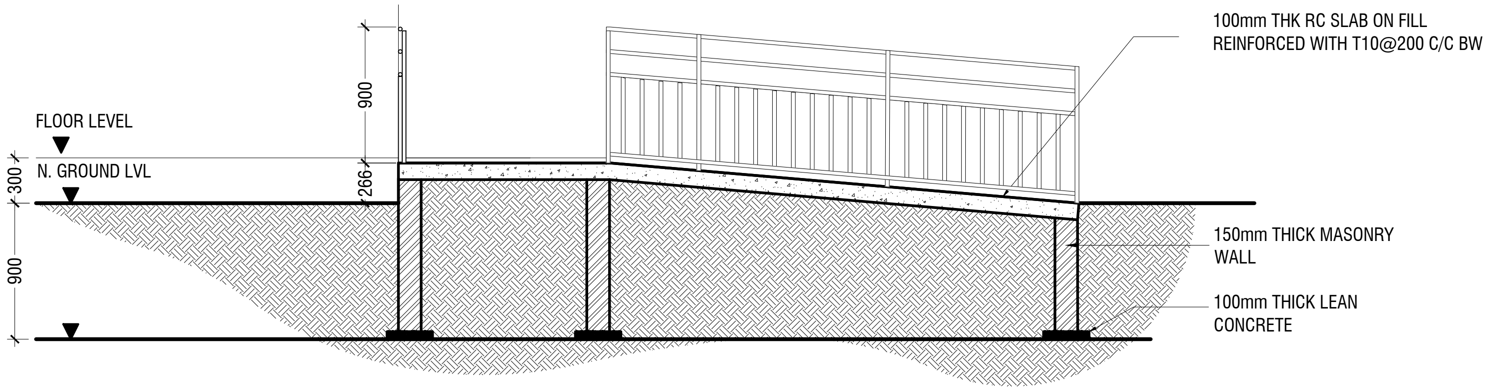
100mm THK RC SLAB ON FILL
REINFORCED WITH T10@200 C/C BW
FLOOR LEVEL
N. GROUND LVL
900
300
266
900
150mm THICK MASONRY
WALL
100mm THICK LEAN
CONCRETE

DETAIL - 2
MAIN ENTRANCE RAMP DETAILS

SCALE 1:50

0 0.25 0.5 1 1.5 2 2.5

SECTION E-E

Gdh.Hoandedhdhoo School 2 Classroom, ICT & Lab Block (2 story)
Client: Ministry of Education

Project Number: RI/2020/006
Date: March 2021
Architect : Mariyam Irasha Shareef
Engineer : Mohamed Muththalib Waleed
Drawn by : Mariyam Irasha Shareef
Services : Aishath Ahmed
Interior : -

Rev no	Date
--	------------
--	------------
--	------------
--	------------

RIYAN PRIVATE LIMITED

t : +9603315049 f : +9603310776
e : info@riyan.com.mv
w : www.riyan.com.mv
3rd floor, H. Azum, Ameeneemagu, Male'

Title: Ramp Details

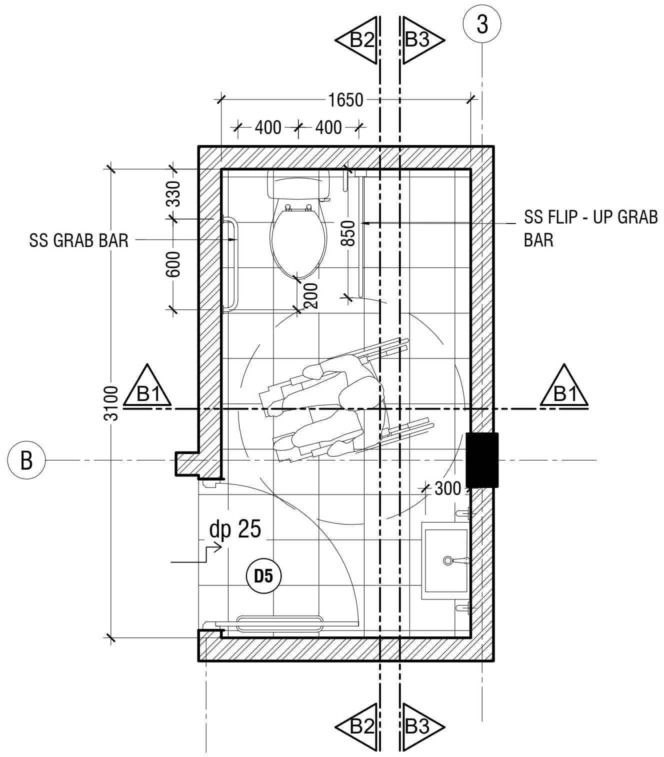
B2
B3
3
1650
400
400
SS GRAB BAR
SS FLIP - UP GRAB BAR
330
600
850
200
3100
B1
B1
B
300
dp 25
D5

TOILET FOR PERSONS WITH DISABILITIES PLAN

SCALE 1:50

0 0.25 0.5 1 1.5 2 2.5

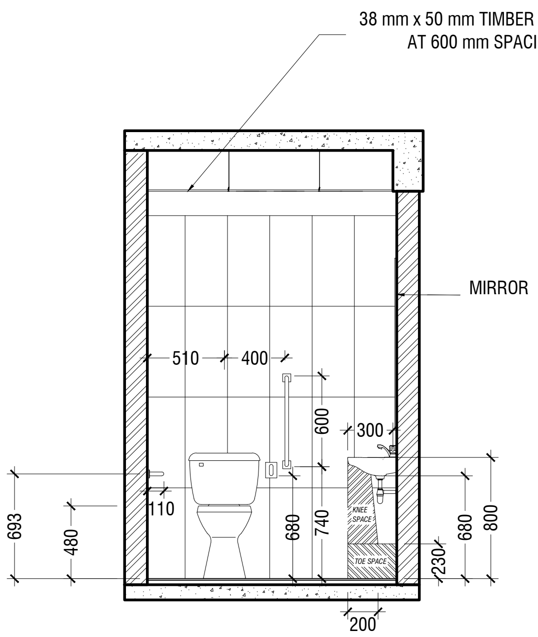
38 mm x 50 mm TIMBER FRAMING AT 600 mm SPACING
MIRROR
510
400
600
300
110
693
480
680
740
680
800
230
200

SECTION B1-B1

SCALE 1:50

0 0.25 0.5 1 1.5 2 2.5

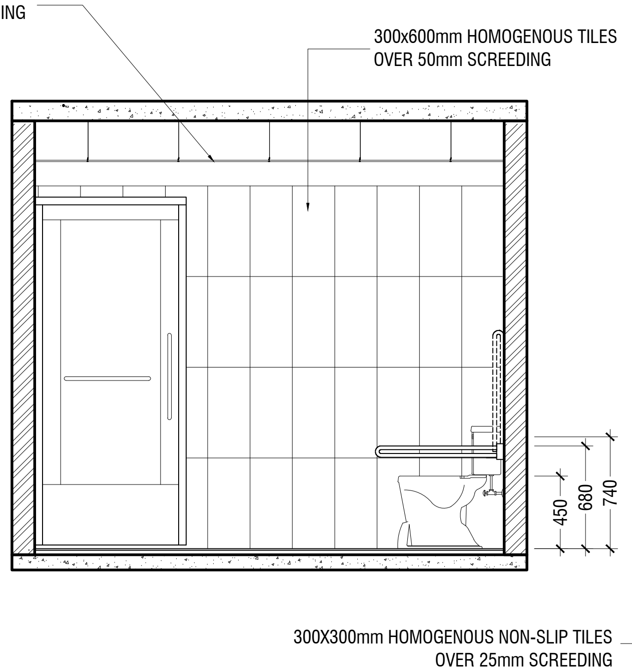
300x600mm HOMOGENOUS TILES OVER 50mm SCREEDING
450
680
740
300X300mm HOMOGENOUS NON-SLIP TILES OVER 25mm SCREEDING

SECTION B2-B2

SCALE 1:50

0 0.25 0.5 1 1.5 2 2.5

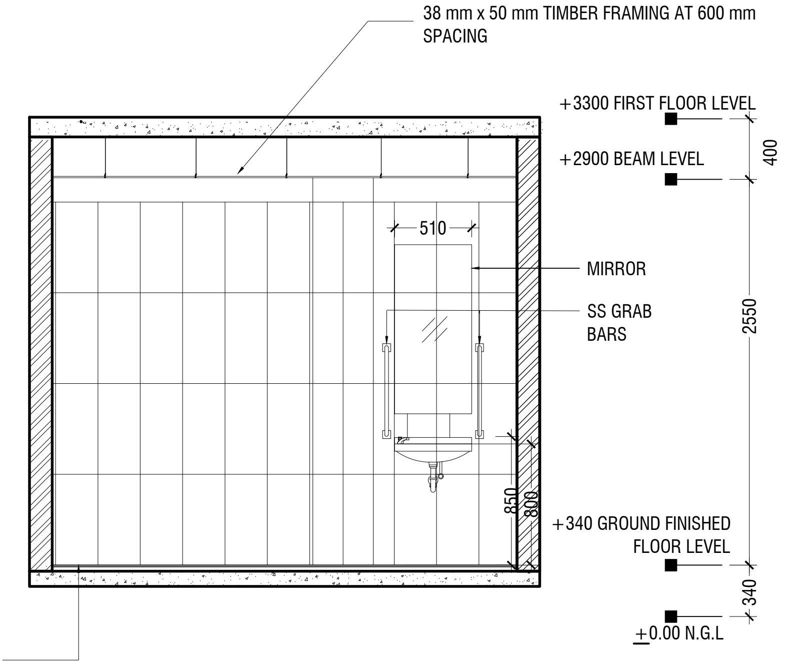
38 mm x 50 mm TIMBER FRAMING AT 600 mm SPACING
+3300 FIRST FLOOR LEVEL
+2900 BEAM LEVEL
400
510
MIRROR
SS GRAB BARS
2550
850
800
+340 GROUND FINISHED FLOOR LEVEL
340
+0.00 N.G.L

SECTION B3-B3

SCALE 1:50

0 0.25 0.5 1 1.5 2 2.5

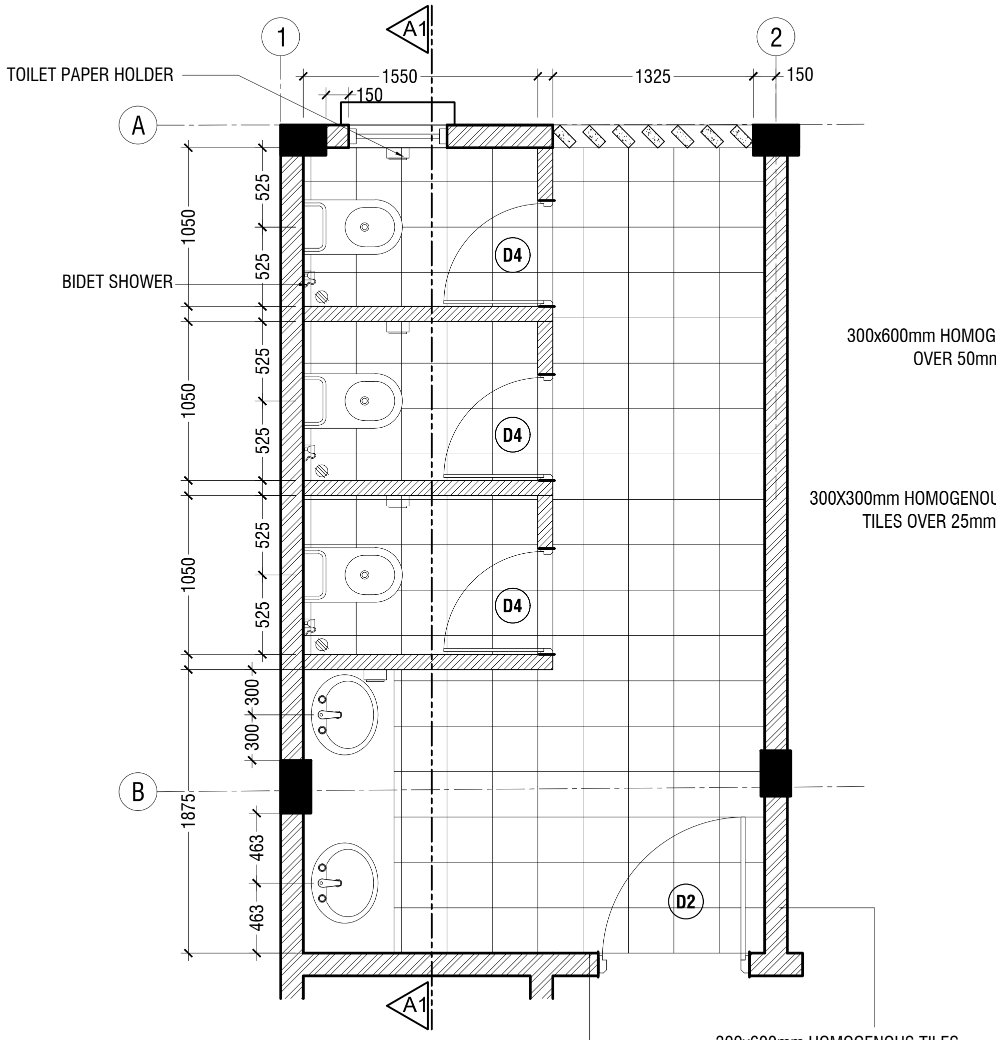
1
A1
2
TOILET PAPER HOLDER
1550
150
1325
150
A
1050
525
525
BIDET SHOWER
D4
1050
525
525
D4
1050
525
525
D4
300
300
B
1875
463
463
D2
A1
300x600mm HOMOGENOUS TILES OVER 50mm SCREEDING (FULLY TILED AS THE OTHER WALLS)

TYPICAL TOILET PLAN

SCALE 1:50

0 0.25 0.5 1 1.5 2 2.5

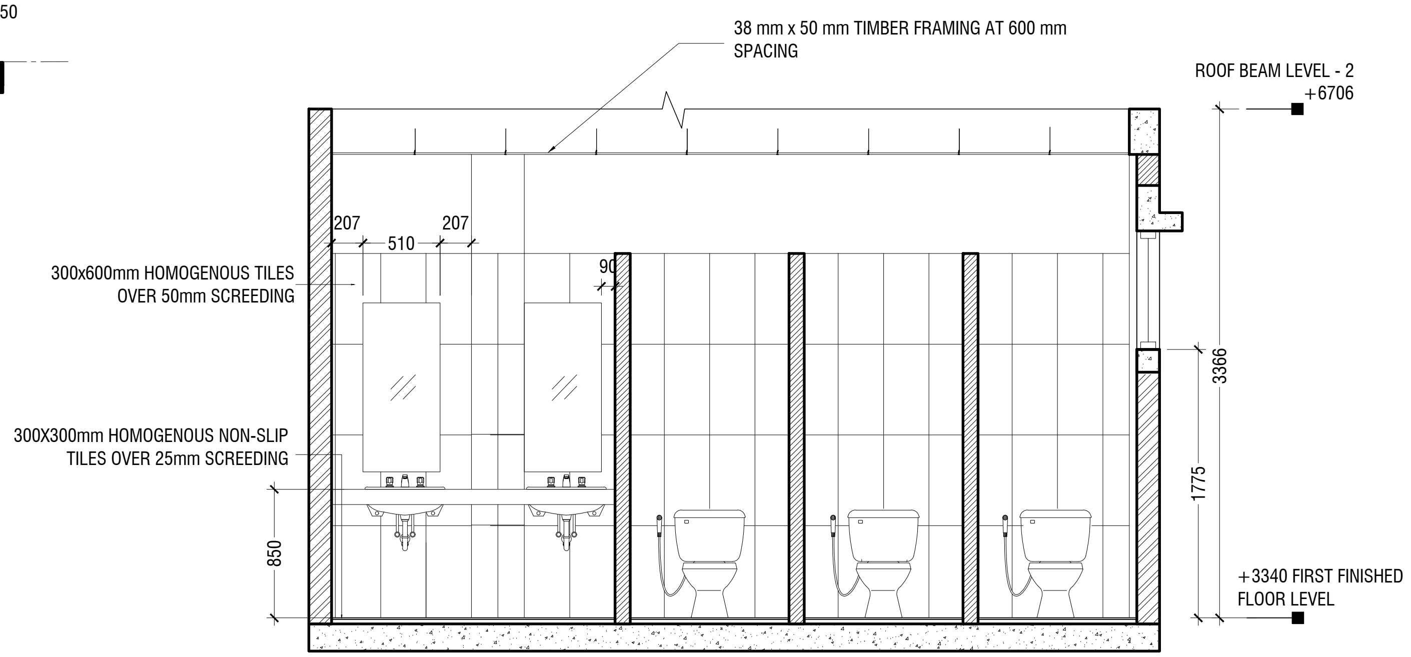
38 mm x 50 mm TIMBER FRAMING AT 600 mm SPACING
ROOF BEAM LEVEL - 2
+6706
207
510
207
90
300x600mm HOMOGENOUS TILES OVER 50mm SCREEDING
300X300mm HOMOGENOUS NON-SLIP TILES OVER 25mm SCREEDING
850
3366
1775
+3340 FIRST FINISHED FLOOR LEVEL

SECTION A1-A1

SCALE 1:50

0 0.25 0.5 1 1.5 2 2.5

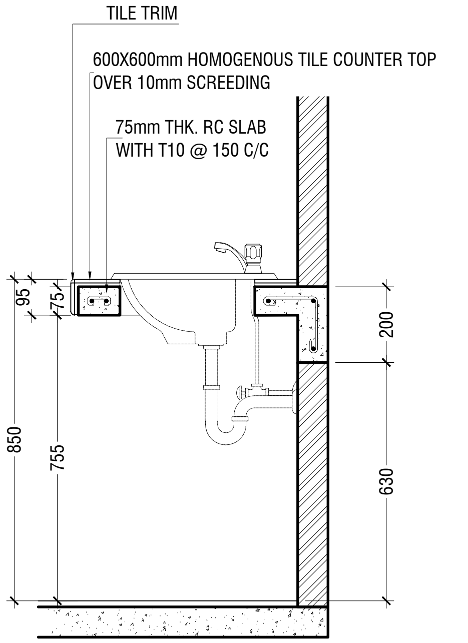
TILE TRIM
600X600mm HOMOGENOUS TILE COUNTER TOP OVER 10mm SCREEDING
75mm THK. RC SLAB WITH T10 @ 150 C/C
95
75
850
755
200
630

COUNTER TOP DETAILS

SCALE 1:20

0 0.1 0.2 0.4 0.6 0.8 1

NOTE:
ALL THE MATERIALS FOR FIXTURES SHALL BE APPROVED
BY THE ARCHITECT/CONSULTANT BEFORE INSTALLATION

GRAB BARS OF THE DISABLE TOILET SHALL BE AS PER MANUFACTURE'S DETAIL

DETAIL - 3
TOILET DETAILS

SCALE 1:50

Gdh.Hoandedhdhoo School 2 Classroom, ICT & Lab Block (2 story)
Client: Ministry of Education

Project Number: RI/2020/006
Date: March 2021
Architect : Mariyam Irasha Shareef
Engineer : Mohamed Muththalib Waleed
Drawn by : Mariyam Irasha Shareef
Services : Aishath Ahmed
Interior : -

Rev no	Date
--	------------
--	------------
--	------------
--	------------

RIYAN PRIVATE LIMITED

t : +9603315049 f : +9603310776
e : info@riyan.com.mv
w : www.riyan.com.mv
3rd floor, H. Azum, Ameeneemagu, Male'

Title: Typical Toilet Details

Page: A-17/21

PLAN

SCALE 1:20

0 0.1 0.2 0.4 0.6 0.8 1

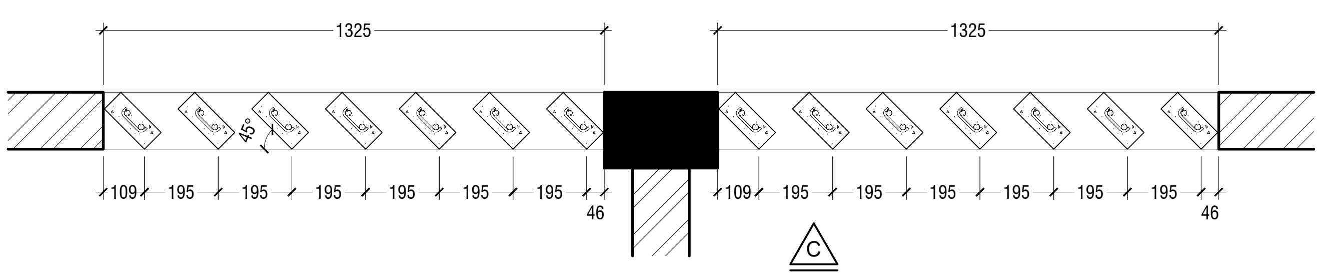
1325
1325
45°
109
195
195
195
195
195
195
46
109
195
195
195
195
195
195
46
C

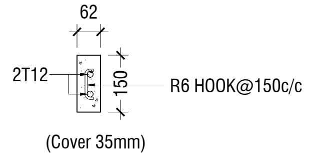
62
2T12
150
R6 HOOK@150c/c
(Cover 35mm)

RC FIN DETAIL

SCALE 1:20

0 0.1 0.2 0.4 0.6 0.8 1

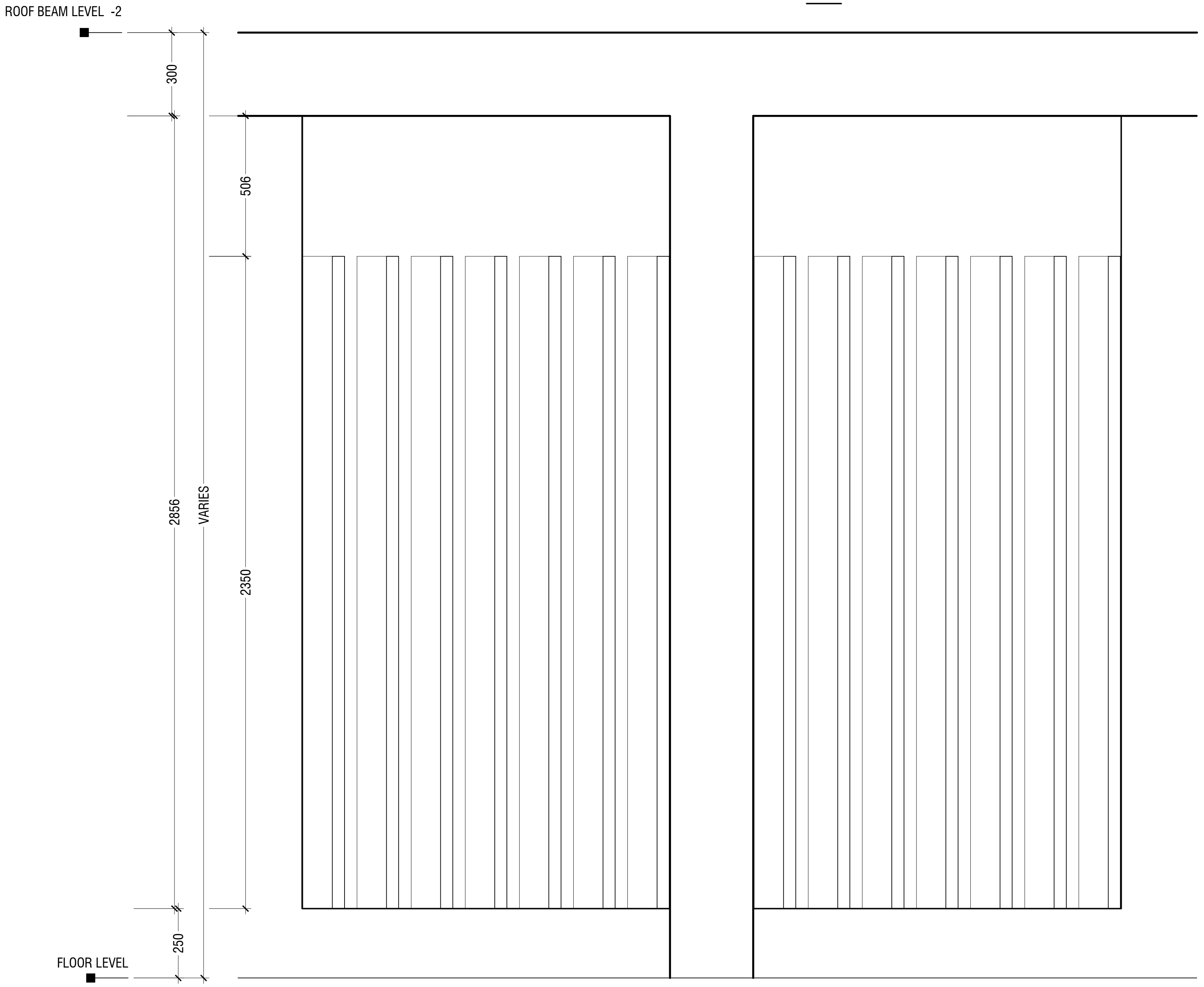
ROOF BEAM LEVEL -2
300
506
2856
VARIES
2350
250
FLOOR LEVEL

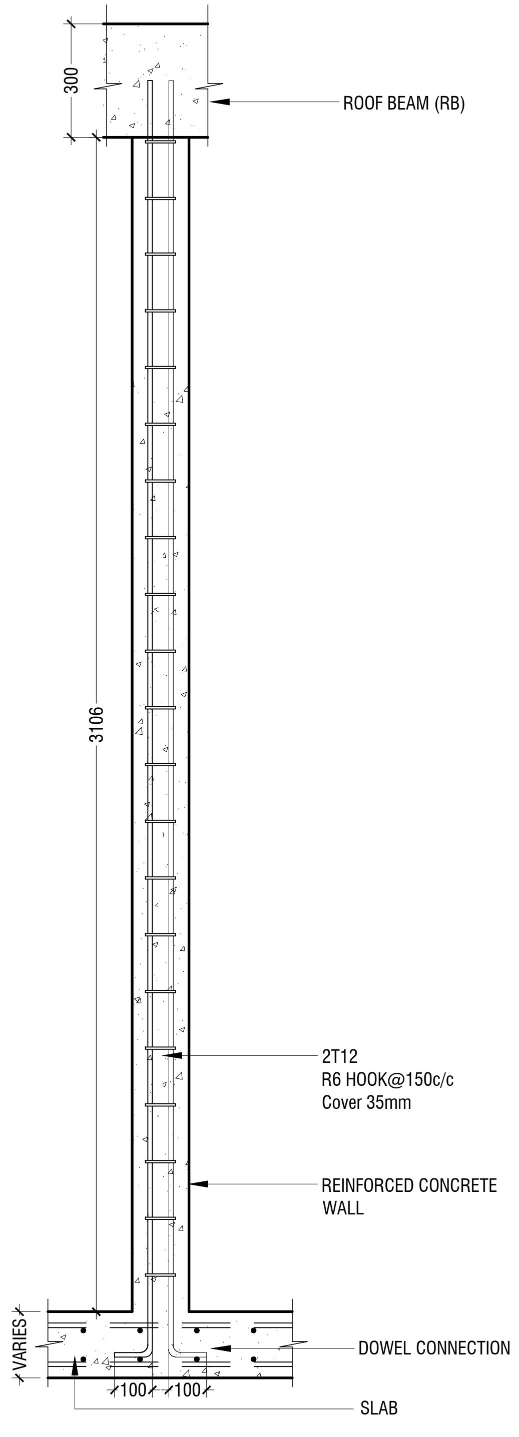
300
ROOF BEAM (RB)
3106
2T12
R6 HOOK@150c/c
Cover 35mm
REINFORCED CONCRETE
WALL
VARIES
DOWEL CONNECTION
100
100
SLAB

ELEVATION - C

SCALE 1:20

0 0.1 0.2 0.4 0.6 0.8 1

NOTE:-
FLOOR TO FLOOR HEIGHT VARIES AND WILL BE SUBJECTED TO CHANGES

SECTION C-C

SCALE 1:20

0 0.1 0.2 0.4 0.6 0.8 1

DETAIL - 4
RC FIN DETAILS (TOILET)

SCALE 1:20

0 0.1 0.2 0.4 0.6 0.8 1

Gdh.Hoandedhdhoo School 2 Classroom, ICT & Lab Block (2 story)
Client: Ministry of Education

Project Number: RI/2020/006
Date: March 2021
Architect : Mariyam Irasha Shareef
Engineer : Mohamed Muththalib Waleed
Drawn by : Mariyam Irasha Shareef
Services : Aishath Ahmed
Interior : -

Rev no	Date
-	-
-	-
-	-

RIYAN PRIVATE LIMITED

t : +9603315049 f : +9603310776
e : info@riyan.com.mv
w : www.riyan.com.mv
3rd floor, H. Azum, Ameeneemagu, Male'

Title: RC Fins Details

Page: A-18/21

PLAN

SCALE 1:20

0 0.1 0.2 0.4 0.6 0.8 1

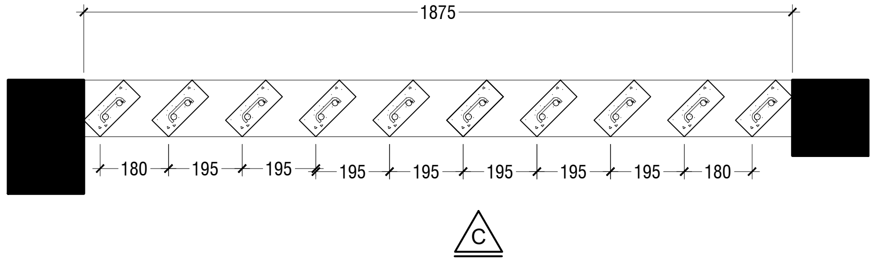
1875
180
195
195
195
195
195
195
195
180
C

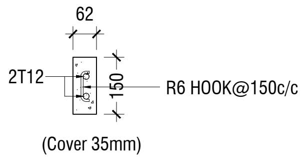
62
2T12
150
R6 HOOK@150c/c
(Cover 35mm)

RC FIN DETAIL

SCALE 1:20

0 0.1 0.2 0.4 0.6 0.8 1

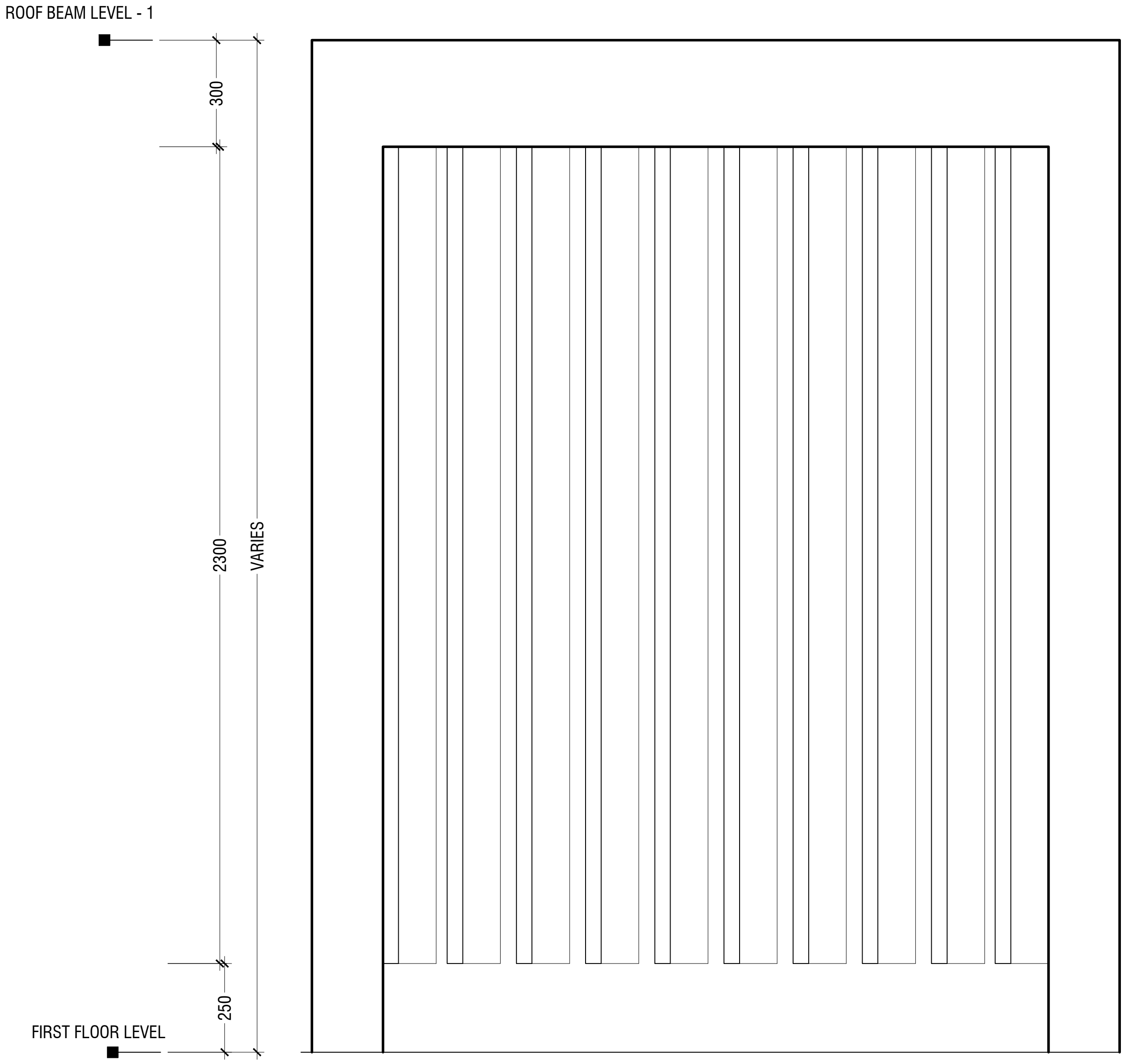
ROOF BEAM LEVEL - 1
300
2300
VARIES
250
FIRST FLOOR LEVEL

ELEVATION - C

SCALE 1:20

0 0.1 0.2 0.4 0.6 0.8 1

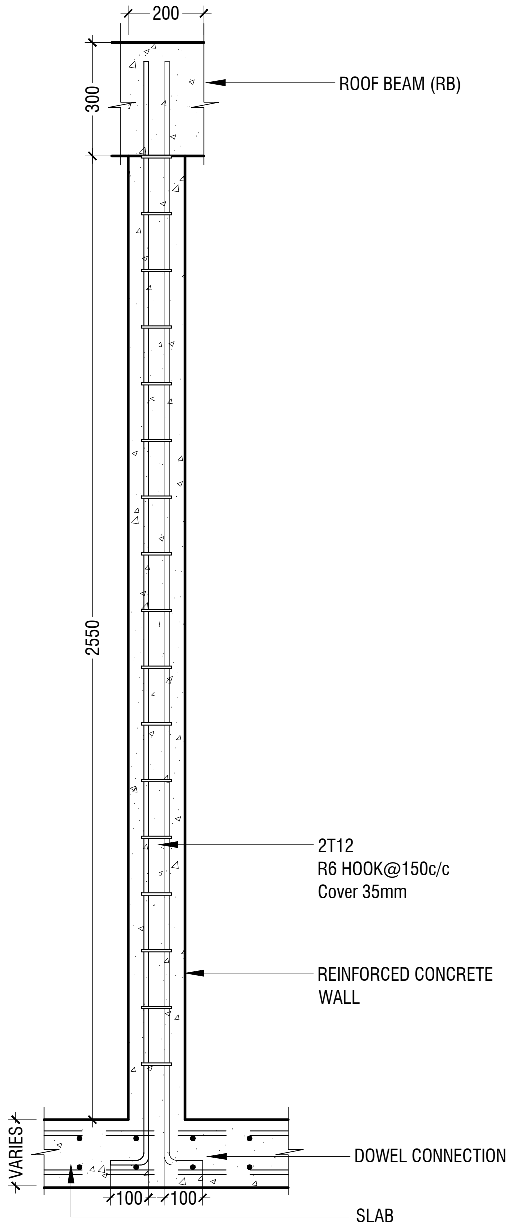
200
300
ROOF BEAM (RB)
2550
2T12
R6 HOOK@150c/c
Cover 35mm
REINFORCED CONCRETE
WALL
VARIES
DOWEL CONNECTION
100
100
SLAB

SECTION C-C

SCALE 1:20

0 0.1 0.2 0.4 0.6 0.8 1

NOTE:-
FLOOR TO FLOOR HEIGHT VARIES AND WILL BE SUBJECTED TO CHANGES

DETAIL - 5
RC FIN DETAILS (CORRIDOR)

SCALE 1:20

0 0.1 0.2 0.4 0.6 0.8 1

Gdh.Hoandedhdhoo School 2 Classroom, ICT & Lab Block (2 story)
Client: Ministry of Education

Project Number: RI/2020/006
Date: March 2021
Architect : Mariyam Irasha Shareef
Engineer : Mohamed Muththalib Waleed
Drawn by : Mariyam Irasha Shareef
Services : Aishath Ahmed
Interior : -

Rev no	Date
--	----------------
--	----------------
--	----------------
--	----------------

RIYAN PRIVATE LIMITED

t : +9603315049 f : +9603310776
e : info@riyan.com.mv
w : www.riyan.com.mv
3rd floor, H. Azum, Ameeneemagu, Male'

Title: RC Fins Detail

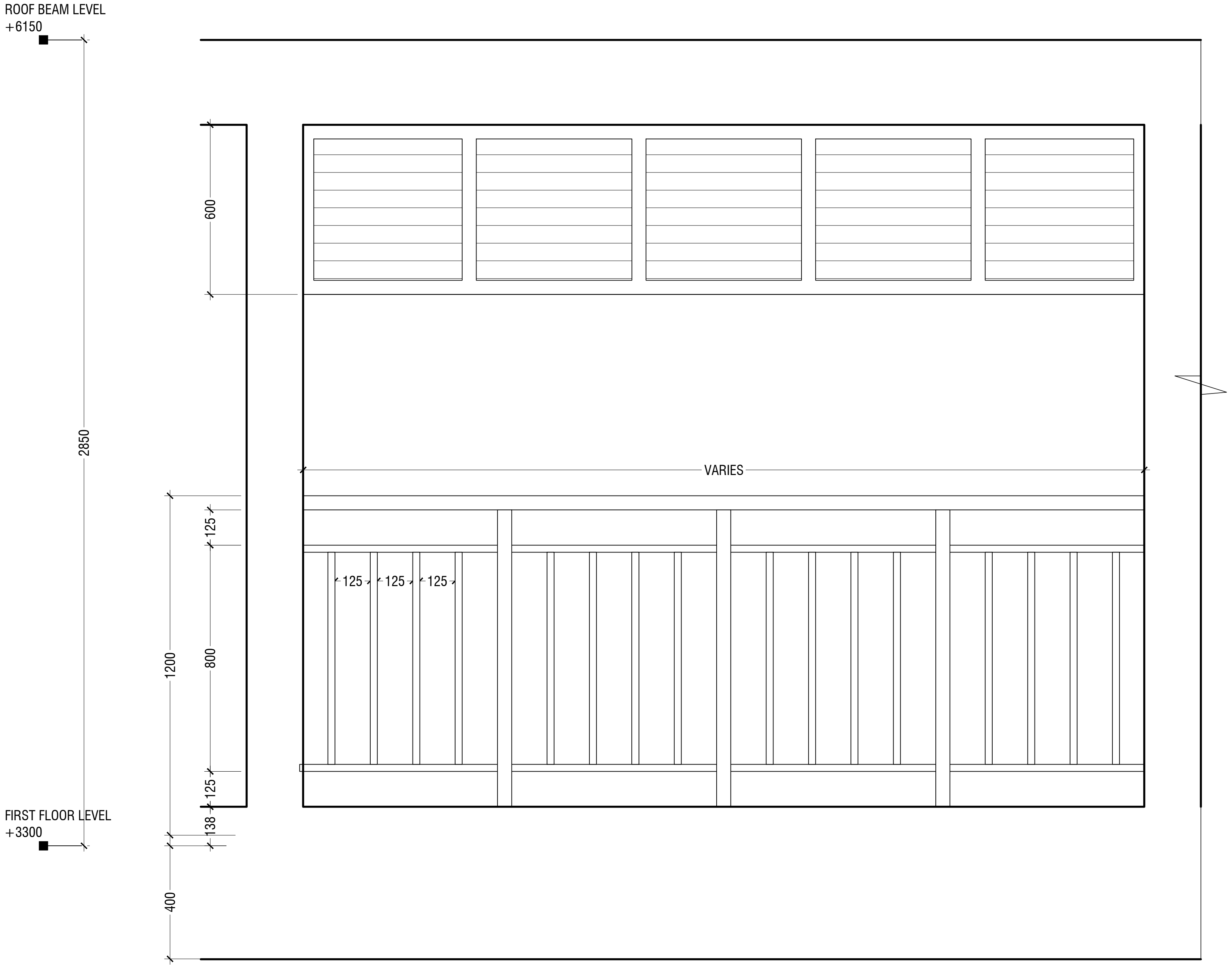
ROOF BEAM LEVEL
+6150
FIRST FLOOR LEVEL
+3300
2850
600
125
800
125
138
1200
400
VARIES
125
125
125

ELEVATION

SCALE 1:20

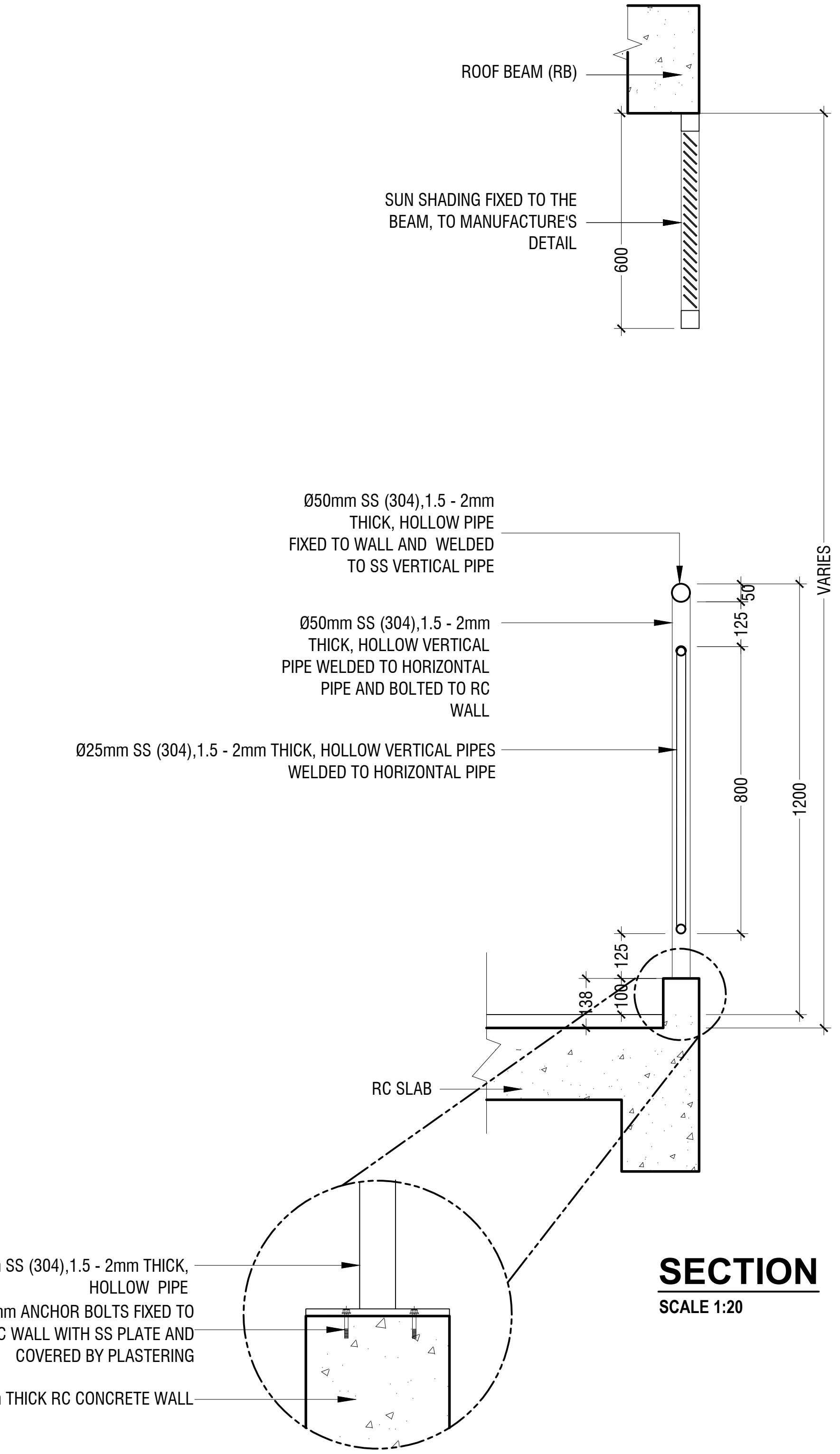
ROOF BEAM (RB)
SUN SHADING FIXED TO THE BEAM, TO MANUFACTURE'S DETAIL
600
Ø50mm SS (304),1.5 - 2mm THICK, HOLLOW PIPE FIXED TO WALL AND WELDED TO SS VERTICAL PIPE
Ø50mm SS (304),1.5 - 2mm THICK, HOLLOW VERTICAL PIPE WELDED TO HORIZONTAL PIPE AND BOLTED TO RC WALL
Ø25mm SS (304),1.5 - 2mm THICK, HOLLOW VERTICAL PIPES WELDED TO HORIZONTAL PIPE
50
125
800
125
100
138
1200
VARIES
RC SLAB
Ø50mm SS (304),1.5 - 2mm THICK, HOLLOW PIPE
4 NOS. 12mm ANCHOR BOLTS FIXED TO THE RC WALL WITH SS PLATE AND COVERED BY PLASTERING
100mm THICK RC CONCRETE WALL

SECTION

SCALE 1:20

NOTE:-
FLOOR TO FLOOR HEIGHT VARIES AND WILL BE SUBJECTED TO CHANGES

DETAIL - 6
RAILING DETAILS

SCALE 1:20

0 0.1 0.2 0.4 0.6 0.8 1

Gdh.Hoandedhdhoo School 2 Classroom, ICT & Lab Block (2 story)
Client: Ministry of Education

Project Number: RI/2020/006
Date: March 2021
Architect : Mariyam Irasha Shareef
Engineer : Mohamed Muththalib Waleed
Drawn by : Mariyam Irasha Shareef
Services : Aishath Ahmed
Interior : -

Rev no	Date
--	-------------
--	-------------
--	-------------
--	-------------

RIYAN PRIVATE LIMITED

t : +9603315049 f : +9603310776
e : info@riyan.com.mv
w : www.riyan.com.mv
3rd floor, H. Azum, Ameeneemagu, Male'

Title: Railing Detail

Page: A-20/21

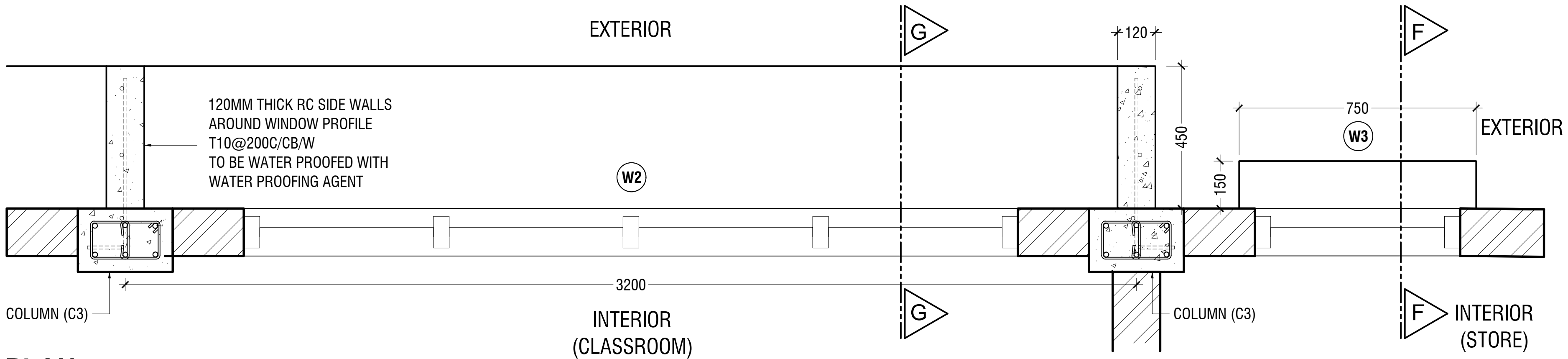
EXTERIOR
G
120
F
120MM THICK RC SIDE WALLS
AROUND WINDOW PROFILE
T10@200C/CB/W
TO BE WATER PROOFED WITH
WATER PROOFING AGENT
450
750
W3
EXTERIOR
W2
150
3200
COLUMN (C3)
G
INTERIOR
(CLASSROOM)
COLUMN (C3)
F
INTERIOR
(STORE)

PLAN

SCALE 1:20

0 0.1 0.2 0.4 0.6 0.8 1

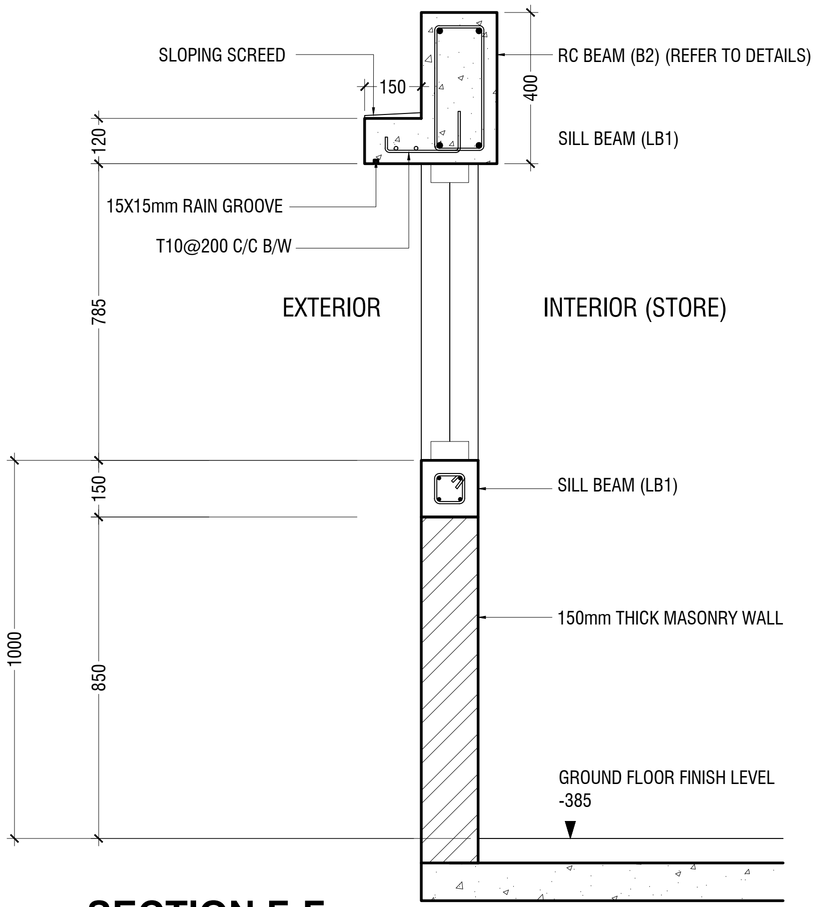
SLOPING SCREED
150
RC BEAM (B2) (REFER TO DETAILS)
400
120
SILL BEAM (LB1)
15X15mm RAIN GROOVE
T10@200 C/C B/W
785
EXTERIOR
INTERIOR (STORE)
150
SILL BEAM (LB1)
1000
150mm THICK MASONRY WALL
850
GROUND FLOOR FINISH LEVEL
-385

SECTION F-F

SCALE 1:20

0 0.1 0.2 0.4 0.6 0.8 1

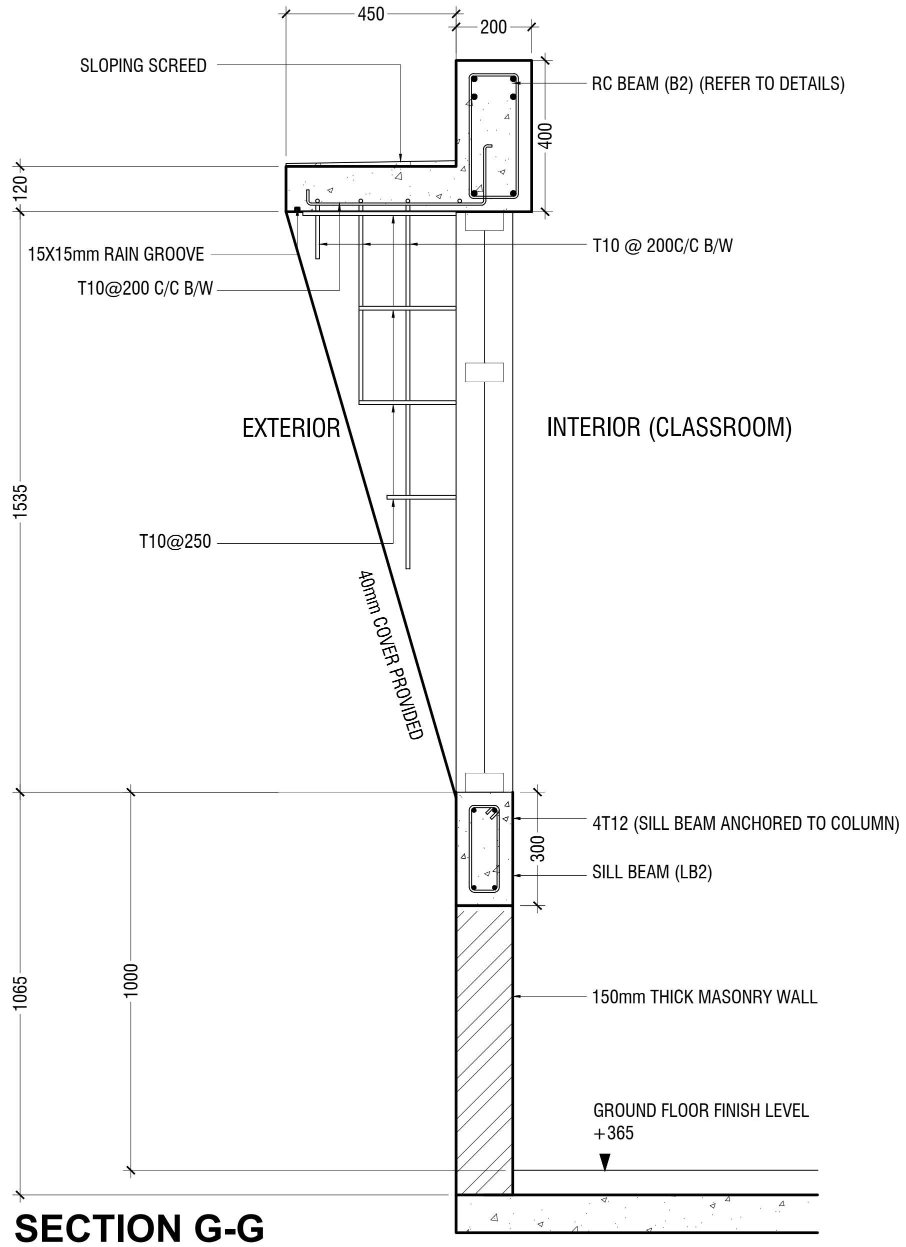
450
200
SLOPING SCREED
RC BEAM (B2) (REFER TO DETAILS)
400
120
15X15mm RAIN GROOVE
T10 @ 200C/C B/W
T10@200 C/C B/W
EXTERIOR
INTERIOR (CLASSROOM)
1535
T10@250
40mm COVER PROVIDED
4T12 (SILL BEAM ANCHORED TO COLUMN)
300
SILL BEAM (LB2)
1065
1000
150mm THICK MASONRY WALL
GROUND FLOOR FINISH LEVEL
+365

SECTION G-G

SCALE 1:20

0 0.1 0.2 0.4 0.6 0.8 1

*** NOTE: GROUND FLOOR**

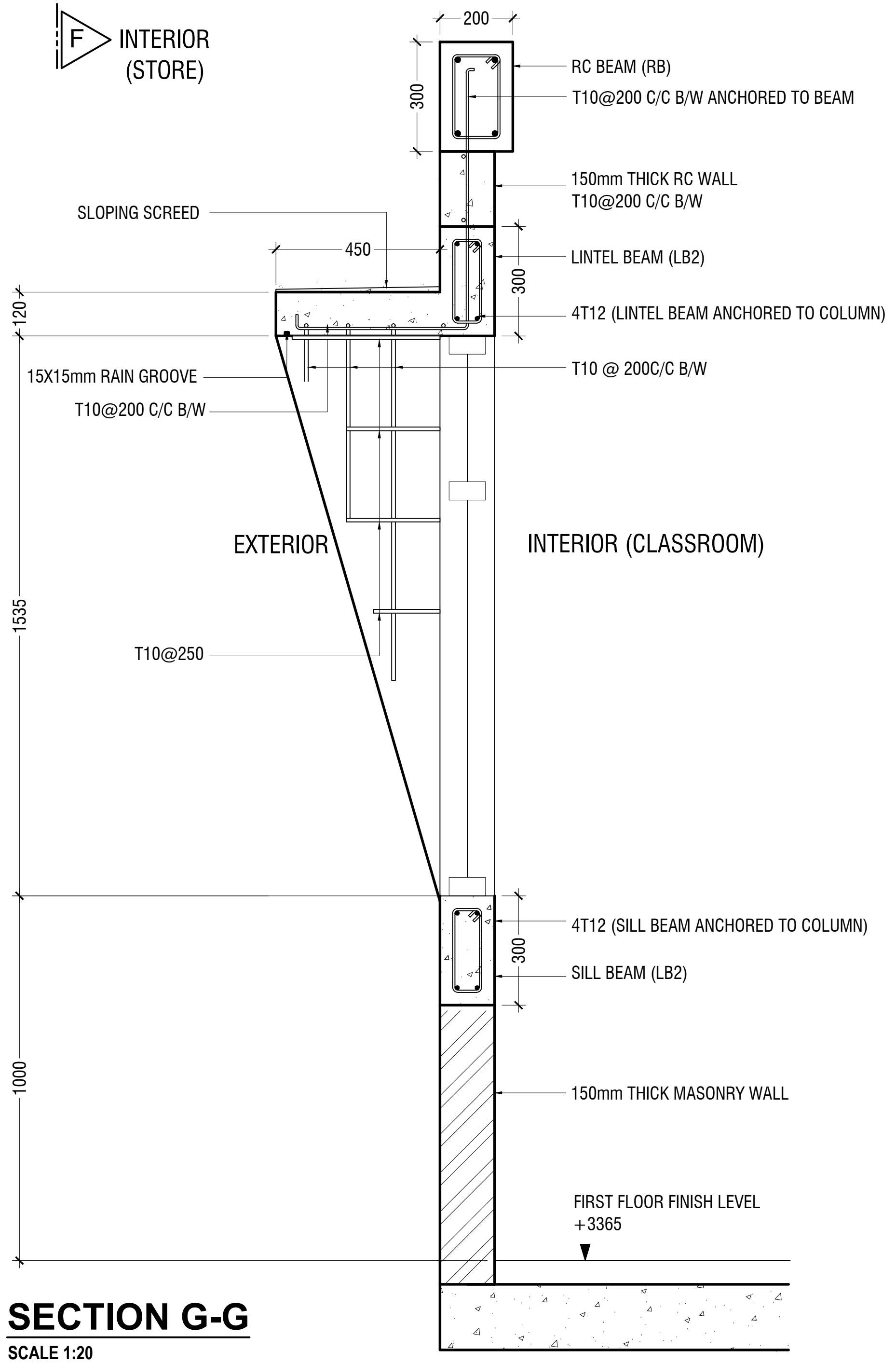
200
RC BEAM (RB)
300
T10@200 C/C B/W ANCHORED TO BEAM
150mm THICK RC WALL
T10@200 C/C B/W
SLOPING SCREED
450
LINTEL BEAM (LB2)
300
120
4T12 (LINTEL BEAM ANCHORED TO COLUMN)
15X15mm RAIN GROOVE
T10 @ 200C/C B/W
T10@200 C/C B/W
EXTERIOR
INTERIOR (CLASSROOM)
1535
T10@250
4T12 (SILL BEAM ANCHORED TO COLUMN)
300
SILL BEAM (LB2)
1000
150mm THICK MASONRY WALL
FIRST FLOOR FINISH LEVEL
+3365

SECTION G-G

SCALE 1:20

0 0.1 0.2 0.4 0.6 0.8 1

*** NOTE: FIRST FLOOR**

DETAIL - 7
RC WALL DETAILS

SCALE 1:20

0 0.1 0.2 0.4 0.6 0.8 1

Gdh.Hoandedhdhoo School 2 Classroom, ICT & Lab Block (2 story)
Client: Ministry of Education

Project Number: RI/2020/006
Date: March 2021
Architect : Mariyam Irasha Shareef
Engineer : Mohamed Muththalib Waleed
Drawn by : Mariyam Irasha Shareef
Services : Aishath Ahmed
Interior : -

Rev no	Date
--	------------
--	------------
--	------------
--	------------

RIYAN PRIVATE LIMITED

t : +9603315049 f : +9603310776
e : info@riyan.com.mv
w : www.riyan.com.mv
3rd floor, H. Azum, Ameeneemagu, Male'

Title: RC Wall details

Page: A-21/21

GENERAL NOTES

THE GENERAL NOTES SHALL BE READ IN CONJUNCTION WITH THE CONTRACT SPECIFICATIONS AND DRAWINGS.
REGARDLESS OF WHETHER OR NOT SHOWN IN DRAWINGS OR OTHER TENDER DOCUMENTS, THE STANDARD PROVISIONS SPECIFIED HEREUNDER FOR COMPLIANCE BY THE CONTRACTOR SHALL APPLY TO ALL RELEVANT PORTIONS OF THE STRUCTURAL WORKS AND SHALL FORM PART OF THIS CONTRACT.

1.0 VERIFICATION OF DIMENSIONS AND LEVELS

- THE CONTRACTOR SHALL VERIFY ALL DIMENSIONS AND LEVELS ON SITE, AND RESOLVE ALL DISCREPANCIES WITH THE ARCHITECT OR ENGINEER PRIOR TO COMMENCEMENT OF WORK.
- DRAWING INDICATES GENERAL & TYPICAL DETAILS OF CONSTRUCTION. WHERE CONDITIONS ARE OF SIMILAR CHARACTER TO DETAILS SHOWN AND ALTHOUGH NOT SPECIFICALLY INDICATED, SIMILAR DETAILS OF CONSTRUCTION SHALL BE USED SUBJECTED TO REVIEW BY THE ENGINEER.
- PRIOR TO COMMENCEMENT OF WORKS, THE CONTRACTOR SHALL VERIFY ALL DIMENSIONS AND LEVELS IN THE CONTRACT DRAWINGS.
- DISCREPANCIES IN DRAWINGS ARISING FROM SUCH VERIFICATION WORKS SHALL BE BROUGHT TO THE ATTENTION OF THE ARCHITECT/ENGINEER.

2.0 SHOP DRAWINGS

- THE CONTRACTOR SHALL BE SOLELY RESPONSIBLE FOR ENSURING TOTAL COORDINATION OF ALL WORKS AND SHALL TAKE SITE MEASUREMENTS PRIOR TO THE PREPARATION OF ANY SHOP DRAWINGS OR BEFORE COMMENCING FABRICATION.
- THE CONTRACTOR SHALL SUBMIT SHOP DRAWINGS FOR ALL SPECIALIST TRADES, SUCH AS PRESTRESSING, CURTAIN WALLING, ETC. FOR REVIEWS AND COMMENTS BY THE ARCHITECT/ENGINEER PRIOR TO COMMENCEMENT OF WORK. SUCH SHOP DRAWINGS SUBMITTED SHALL INCORPORATE ALL NECESSARY CONNECTION DETAILS TO THE STRUCTURAL MEMBERS SUCH AS CAST-IN INSERTS, EMBEDDED PLATES, ETC.

3.0 INCORPORATION OF M&E REQUIREMENTS IN THE STRUCTURE

- THE CONTRACTOR SHALL BE SOLELY RESPONSIBLE FOR ENSURING TOTAL COORDINATION OF STRUCTURAL, M & E PENETRATION DRAWINGS OF SERVICES AND SUBMIT SUCH SHOP DRAWINGS TO THE ARCHITECT/ENGINEER FOR REVIEWS AND APPROVAL PRIOR TO COMMENCEMENT OF WORK.
- THESE SHOP DRAWINGS SHALL INCORPORATE ALL MECHANICAL, ELECTRICAL AND SANITARY WORKS TO BE EMBEDDED IN CONCRETE AND ALL OPENINGS FOR ALL PIPE OR DUCT WORKS, BASED ON THE REQUIREMENTS OF M & E DRAWINGS IN HIS POSSESSION.
- HE SHALL CHECK AND RESOLVE ALL DISCREPANCIES WITH THE RESPECTIVE ENGINEER PRIOR TO PLACEMENT OF CONCRETE.

4.0 LEAN CONCRETE FOR SUSPENDED STRUCTURES

- UNLESS OTHERWISE STATED, 50 MM THICK LEAN CONCRETE WITH A MINIMUM 28-DAY CUBE STRENGTH OF 15N/MM2 SHALL BE PROVIDED ON ALL SOIL SURFACES FORMING THE UNDERSIDE OF STRUCTURAL CONCRETE MEMBERS.

5.0 STRUCTURAL ELEMENTS ON GRADE

- UNLESS OTHERWISE STATED, A SINGLE LAYER OF 0.25 MM(HEAVY DUTY) POLYTHENE SHEET, OR EQUIVALENT THERMOPLASTIC MATERIAL, LAID OVER A COMPACTED 60 MM THICK LAYER OF HARD CORE BLINDED WITH SAND TO PREVENT GROUT LOSS FROM SEEPAGE INTO THE GROUND SHALL BE PROVIDED ON ALL SOIL SURFACES FORMING THE UNDERSIDE OF THE NON-SUSPENDED SLABS.

6.0 SUBGRADE UNDER STRUCTURAL ELEMENTS

- WHERE THE CONTRACTOR REQUIRES REMOVAL AND SUBSEQUENT BACKFILL OF SUBGRADE PRIOR TO CASTING OF PILECAP/WALL/BEAM/SLAB, HE SHALL ENSURE THAT THE BACKFILL IS OF APPROVED MATERIAL AND THAT THE BACKFILL SHALL BE REASONABLY COMPACTED TO ENSURE THAT THE COMPACTED SOIL IS ABLE TO WITHSTAND THE WEIGHT OF THE WET CONCRETE. THE CONTRACTOR SHALL EXERCISE PROPER SKILL AND CARE TO AVOID DAMAGE TO ADJACENT INSTALLED STRUCTURES ARISING FROM HIS CONSTRUCTION SEQUENCE.

7.0 WATERPROOFING FOR STRUCTURES

- THE CONTRACTOR SHALL SUBMIT SHOP DRAWINGS AND METHOD STATEMENTS FOR THE ENGINEER'S APPROVAL PRIOR TO COMMENCEMENT OF WORK. REQUIRED SHOP DRAWING DETAILS INCLUDE BUT ARE NOT LIMITED TO TREATMENT OF FLASHINGS, WATERSTOP AT CONSTRUCTION JOINTS, WALL AND SLAB PENETRATIONS.
- ALL PENETRATIONS THROUGH STRUCTURAL ELEMENTS SHALL BE CAST-IN, SLEEVED AND PROVIDED WITH APPROVED PUDDLE FLANGE DETAIL. IF FOR ANY REASON THE CONTRACTOR IS UNABLE TO LAY WATERSTOP AT CONSTRUCTION JOINTS AS INDICATED IN THE DRAWINGS, HE SHALL AT HIS OWN EXPENSES PROVIDE ADEQUATE GROUT TUBES FOR WATERPROOF PRESSURE GROUTING TO ENSURE WATERTIGHTNESS OF THE JOINT.
- ALL GROUT TUBES SHALL BE MARKED AND PROTECTED FROM BLOCKAGE.
- BACKFILLING OPERATIONS AGAINST VERTICAL SURFACE SHALL BE CARRIED OUT AS SOON AS THE WATERPROOFING BARRIER IS INSTALLED TO THE SATISFACTION OF THE ENGINEER.

8.0 CASTING LAYERS

- INCLINED CASTING LAYERS AND INCLINED CONSTRUCTION JOINTS SHALL BE AVOIDED.
- HORIZONTAL CASTING LAYERS SHALL NOT IN GENERAL EXCEED 0.6 M THICKNESS UNLESS OTHERWISE APPROVED BY THE ENGINEER.

9.0 FOUNDATIONS

- ALL FOUNDATIONS HAS BEEN DESIGNED FOR SAFE GROUND PRESSURE OF 150 KN/M.
- ALL BACKFILL SHOULD BE DONE WITH MATERIALS APPROVED BY THE CONSULTANT AND SOURCE. ALL BACKFILL SHOULD BE STRUCTURAL FILL, COMPACTED IN LAYERS AS SPECIFIED.
- WEAK POCKETS FOUND BELOW THE ASSUMED FOUNDATION LEVELS SHALL BE REMOVED AND REPLACED BY PLAIN CONCRETE.
- IN CASE OF EXCAVATIONS BELOW THE ASSUMED LEVEL OF THE FOUNDATION, THE SOIL SHALL BE REPLACED BY PLAIN CONCRETE.
- IN CASE GROUND WATER IS PRESENT ABOVE FOUNDATION LEVEL, THE CONTRACTOR SHALL BE RESPONSIBLE FOR DEWATERING THE BELOW LEVEL OF FOUNDATIONS.
- THE CONTRACTOR SHALL MAINTAIN DRY WORKING CONDITIONS THROUGH OUT THE CONSTRUCTION PERIOD. RESTORING WATER TABLE CAN BE DONE AFTER BACKFILLING AND COMPACTION UP TO THE SLAB ON GRADE LEVEL, OR AS DIRECTED BY THE ENGINEER.
- NO BACK FILLING SHALL BE PLACED AGAINST WALLS RETAINING EARTH, UNLESS THE WALLS ACHIEVE SUFFICIENT STRENGTH TO PREVENT MOVEMENT OR STRUCTURAL DAMAGE.

10.0 CONSTRUCTION LOAD AND SHORING

- CONSTRUCTION LIVE LOAD IMPOSED ON ANY SINGLE FLOOR SHALL NOT EXCEED 1.5 KN/M2. UNLESS OTHERWISE APPROVED BY THE ENGINEER, DEAD LOAD OF THE TOP CONSTRUCTION FLOOR SHALL BE SUPPORTED BY TWO COMPLETED FLOORS DIRECTLY BELOW IT.
- PROPS TO BEAMS AND SLABS AT ANY FLOORS SHALL NOT BE REMOVED UNTIL THE TWO IMMEDIATE FLOORS ABOVE THAT LEVEL ARE CAPABLE OF SUPPORTING THEMSELVES AS WELL AS ANY LOADS IMPOSED DURING CONSTRUCTION. CONSIDERATIONS GOVERNING REMOVAL OF PROPS INCLUDE BUT ARE NOT LIMITED TO THE ATTAINMENT OF 28-DAY STRENGTH FOR THE CONCRETE, DESIGN LOAD CAPACITY OF THE FLOOR UNDER REVIEW AND THE COMPLETION OF PRESTRESSING AND GROUTING OPERATIONS IN THE CASE OF A PRESTRESSED STRUCTURAL FLOOR SYSTEM.
- PROPS SHALL BE LEFT IN PLACE FOR SUPPORTING THE CONSTRUCTION LOADS APPROVED BY THE ENGINEER.
- NO ALLOWANCE HAS BEEN MADE IN THE DESIGN OF THE PERIMETER BEAMS/WALLS FOR THE SUPPORT OF TEMPORARY SCAFFOLDINGS.
- THE CONTRACTER SHALL ENGAGE HIS OWN PROFESSIONAL ENGINEER TO DESIGN AND STRENGTHEN THE BEAMS/WALLS.
- THE CONTRACTER SHALL ENGAGE HIS OWN PROFESSIONAL ENGINEER CHECK THE ADEQUACY OF SHORING DETAIL PROVIDED PROCEEDING THE WORK, AS SHORING WAS DESIGNED, CONSIDERING THE STATUS OF THE BUILDING AT THE TIME OF DESIGN.

11.0 CONCRETE COVER

- MINIMUM COVER TO OUTERMOST REINFORCEMENT INCLUDING LINKS SHALL BE AS FOLLOWS.

STRUCTURAL ELEMENT	COVER (mm)
RAFT BEAM & SLAB (EARTH FACE)	60
RAFT BEAM & SLAB (INTERNAL FACE)	60
COLUMN	40
BEAM	35
BEAM (EXTERNAL FACE)	40
SLAB	30
INTERNAL WALL	30
EXTERNAL WALL	40

- NOTE: EARTH FACE COVER OF BEAMS, COLUMNS & WALLS SHOULD BE 50mm

12.0 MATERIAL STRENGTHS

12.1 CONCRETE

- UNLESS OTHERWISE STATED, ORDINARY PORTLAND CEMENT CONFORMING TO BS 12, TO BE USED FOR ALL THE RC STRUCTURAL ELEMENTS.
- THE MINIMUM 28-DAY COMPRESSIVE CUBE STRENGTH OF CONCRETE FOR SPECIFIED STRUCTURAL ELEMENTS SHALL BE AS FOLLOWS UNLESS OTHERWISE STATED:

MAIN BUILDING	
LEAN CONCRETE	15 N/mm2
MASS CONCRETE	30 N/mm2
COLUMN, BEAM AND SLAB	30 N/mm2
EXTERNAL WORK	
PAVEMENTS	30 N/mm2
ALL OTHERS (CULVERT, DRAINS, MANHOLE, ETC)	30 N/mm2
FOUNDATION	
PILECAP, FOOTING, RAFT TIE-BEAM, CAPPING BEAM	30 N/mm2

- CEMENT SHALL BE ORDINARY PORTLAND CEMENT TO BS 12.

Gdh.Hoandedhdhoo School 2 Classroom, ICT & Lab Block (2 story)
Client: Ministry of Education

Project Number: RI/2020/006
Date: March 2021
Architect : Mariyam Irasha Shareef
Engineer : Mohamed Muththalib Waleed
Drawn by : Mariyam Irasha Shareef
Services : Aishath Ahmed
Interior : -

Rev no	Date
--	----------
--	----------
--	----------
--	----------

RIYAN PRIVATE LIMITED

t : +9603315049 **f** : +9603310776
e : info@riyan.com.mv
w : www.riyan.com.mv
3rd floor, H. Azum, Ameeneemagu, Male'

Title: General Notes

12.2 REINFORCEMENT

- UNLESS OTHERWISE STATED, BAR SIZE 10MM DIAMETER OR LARGER SHALL BE HIGH TENSILE TYPE II DEFORMED BARS. THE MINIMUM YIELD STRENGTH OF STEEL BAR REINFORCEMENT SHALL BE AS FOLLOWS:

MILD STEEL PLAIN BAR	250 N/mm2
HIGH TENSILE TYPE II DEFORMED BAR	415 N/mm2

12.25 REINFORCEMENT ANCHORAGE OR LAPPING IS AS FOLLOWS U.N.O.

	BAR GRADE 415
TENSION	45Ø
COMPRESSION	45Ø

Ø IS DIAMETER OF THE SMALLER SIZED LAPPED BAR.

- NO SPLICE SHALL BE MADE AT POINT OF MAXIMUM STRESS,EG IN BEAMS AND SLABS, THERE SHALL BE NO SPLICING OF TOP BARS OVER SUPPORTS NOR BOTTOM BARS AT MID-SPANS. SPLICES SHALL BE STAGGERED WHEREVER POSSIBLE. LAP LENGTH FOR UNEQUAL SIZE BARS (OR WIRES IN FABRIC) MAY BE BASED UPON THE SMALLER BAR. FOR BUNDLED BARS, THE EQUIVALENT DIAMETER SHALL BE USED. CRANKING OF BARS SHALL NOT EXCEED A SLOPE OF 1:10.
- FOR LAP LENGTH, WHERE SYMBOLS ARE NOT INDICATED, THE TENSION LAP LENGTH SHALL BE FOLLOWED.

13.0 STIRRUPS, LINKS AND TIES

- ALL STIRRUPS, LINKS AND TIES IN BEAMS, COLUMNS AND WALLS RESPECTIVELY SHALL TERMINATE NOT MORE THAN 75mm FROM THE FACE OF ANY ADJACENT STRUCTURAL MEMBERS.

14.0 SLAB DISTRIBUTION BARS

- REGARDLESS OF WHETHER OR NOT SHOWN ON PLAN, ALL DISTRIBUTION BARS FOR SLAB SHALL COMPRISE TYPICALLY ONE OF THE FOLLOWING COMBINATIONS, UNLESS OTHERWISE STATED IN THE RELEVANT DRAWINGS :

SLAB THICKNESS (mm)	MIN. DISTRIBUTION BAR
250 OR LESS	T10-300
GREATER THAN 250 BUT LESS THAN OR EQUAL TO 300	T10-200
GREATER THAN 300 BUT LESS THAN OR EQUAL TO 400	T10-150

15.0 FLOOR RENDERING

- THICKNESS OF SCREED RENDERING/MASS CONCRETE TOPPING EXCEEDING 60 OR MORE SHALL BE REINFORCED WITH ONE LAYER OF R6.

16.0 SHRINKAGE CRACKS

- THE SURFACE OF CONCRETE SHALL BE ADEQUATELY AND CONTINUOUSLY CURED TO SPECIFICATION TO PREVENT FORMATION OF SHRINKAGE CRACKS.THOUGH SHRINKAGE CRACKS HAVE NO EFFECT ON THE STRENGTH AND INTEGRITY OF THE STRUCTURE,THEY SHOULD BE SEALED BY EPOXY PRESSURE GROUTING. ALL COST INCURRED FOR THE NECESSARY SEALING UP OF SHRINKAGE CRACKS BY EPOXY PRESSURE GROUTING SHALL BE DEEMED TO BE INCLUDED IN THE CONCRETE WORK AS TENDERED.

17.0 STEEL BAR CORROSION PROTECTION

- ALL EXPOSED BARS FOR FUTURE CONSTRUCTION PURPOSES (EXCEEDING 3 MONTHS) MUST BE COATED WITH MASTER EMACO 8100 AP OR APPROVED EQUIVALENT AND PROVIDED WITH ADEQUATE MAINTENANCE.

18.0 SPACER BARS

- ALL SPACER BARS BETWEEN 2 OR MORE LAYERS OF REINFORCEMENT SHALL T25 OR BAR DIAMETER (WHICHEVER IS GREATER) AT ±1-5M C/C.

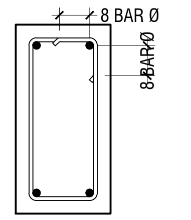

Ø = DIA OF LINK

SHEAR LINKS ANCHORAGE DETAIL

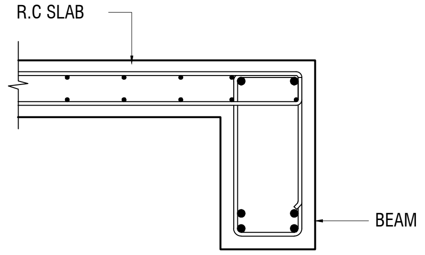

SLAB-BEAM ANCHORAGE DETAIL

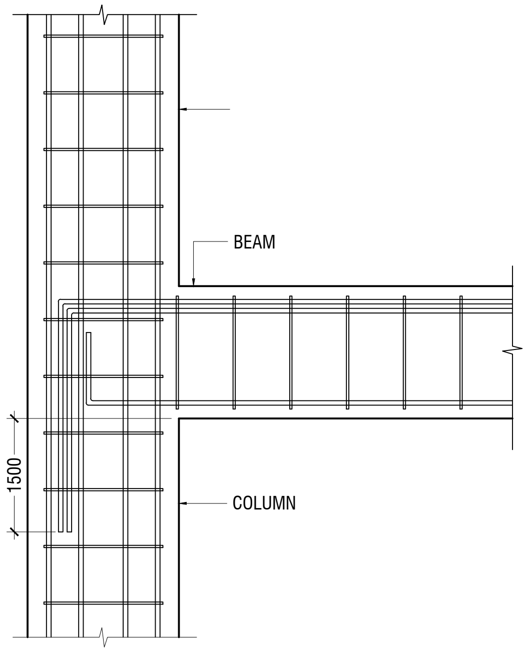

BEAM TO COLUMN CONNECTION

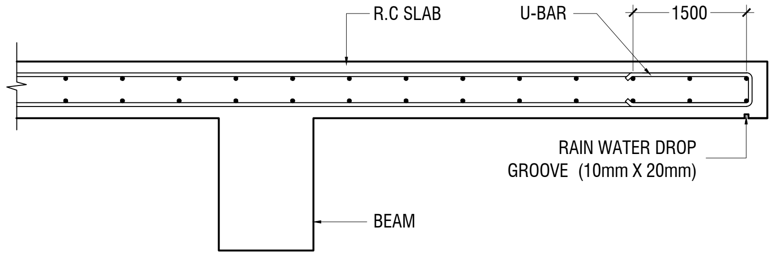

CANTILEVERED SLAB EDGE DETAIL

Gdh.Hoandedhdhoo School 2 Classroom, ICT & Lab Block (2 story)
Client: Ministry of Education

Project Number: RI/2020/006
Date: March 2021
Architect : Mariyam Irasha Shareef
Engineer : Mohamed Muththalib Waleed
Drawn by : Mariyam Irasha Shareef
Services : Aishath Ahmed
Interior : -

Rev no	Date
--	-------------
--	-------------
--	-------------
--	-------------

RIYAN PRIVATE LIMITED

t : +9603315049 f : +9603310776
e : info@riyan.com.mv
w : www.riyan.com.mv
3rd floor, H. Azum, Ameeneemagu, Male'

Title: General Notes

Page: S-00/12

19.0 STRUCTURAL TIMBER SPECIFICATION

19.1 THE CONTRACT STRUCTURAL DRAWINGS AND SPECIFICATIONS REPRESENT THE COMPLETED STRUCTURE, AND ARE NOT INTENDED TO INDICATE THE METHOD OR MEANS OF CONSTRUCTION. THE CONTRACTOR SHALL SUPERVISE AND DIRECT THE WORK AND SHALL BE SOLELY RESPONSIBLE FOR ALL CONSTRUCTION MEANS, METHODS, PROCEDURES, TECHNIQUES, SEQUENCES, AND FOR JOB SAFETY.

19.2 THE ENGINEER DOES NOT HAVE CONTROL OR CHARGE OF, AND SHALL NOT BE RESPONSIBLE FOR, CONSTRUCTION MEANS, METHODS, TECHNIQUES, SEQUENCES, OR PROCEDURES, FOR SAFETY PRECAUTIONS AND PROGRAMS IN CONNECTION WITH THE WORK, FOR THE ACTS OR OMISSIONS OF THE CONTRACTOR, SUBCONTRACTOR, OR ANY OTHER PERSONS PERFORMING ANY OF THE WORK, OR FOR THE FAILURE OF ANY OF THEM TO CARRY OUT THE WORK IN ACCORDANCE WITH THE CONTRACT DOCUMENTS.

19.3 ALL CONSTRUCTION IS IN COMPLIANCE WITH THE CONSTRUCTION DOCUMENTS. THE GENERAL CONTRACTOR SHALL BE RESPONSIBLE FOR PERFORMING ALL WORK IN COMPLIANCE WITH THE CONSTRUCTION DOCUMENTS.

19.4 ALL TIMBER FOR STRUCTURAL USE SHALL BE HARDWOOD OR SOFTWOOD OF VISUAL GRADE C/D IN ACCORDANCE WITH BS 5756 WITH THE FOLLOWING MINIMUM GRADE STRESSES:

19.5 CONNECTIONS
    PLATES - STAINLESS STEEL GRADE 316 OF STATED THICKNESS
    BOLTS - SS GRADE 316

19.6 TIMBER TREATMENT
    MOISTURE - PRESSURE IMPREGNATION OF CCA
    INSECTS - TERMITE TREATMENT FOR TIMBER IN / NEAR GROUND

20.0 STRUCTURAL STEEL SPECIFICATION

1. SEE 21.0 ON PRIMARY CODES AND SPECIFICATIONS.

2. MATERIALS:

W-SHAPES & WT-SHAPES.................................... ASTM A992
S-SHAPES, M-SHAPES, HP-SHAPES........................... ASTM A36
ST-SHAPES & MT-SHAPES................................... ASTM A36
C-SHAPES & MC-SHAPES.................................... ASTM A36
ANGLES & PLATES... ASTM A36
HSS SHAPES.. ASTM A500, GRADE B
STEEL PIPE................................. ASTM A53 (TYPE E OR S), GRADE B
HIGH STRENGTH BOLTS..................................... ASTM A325
MACHINE BOLTS... ASTM A307
ANCHOR RODS.................................ASTM F1554, GRADE 55 TYPE S1(UNO)
WELDED HEADED STUDS..................................... ASTM A108
DEFORMED BAR ANCHORS.................................... ASTM A496
WELDING ELECTRODES...................................... AWS D1.1, E70 SERIES

3. NON-SHRINK, NON-METALLIC GROUT WITH A 28 DAY STRENGTH OF 35MPa SHALL BE USED UNDER BASE PLATES AND SHALL CONFORM TO BS EN 12390-3 AND EN 196-1. MASTERFLOW 542 OR EQUIVALENT MAYBE USED.

23.0 POST-INSTALLED ANCHORS

1. POST-INSTALLED ANCHORS SHALL ONLY BE USED WHERE SPECIFIED ON THE DRAWINGS. CONTRACTOR SHALL OBTAIN APPROVAL FROM ENGINEER OF RECORD (EOR) PRIOR TO USING POST-INSTALLED ANCHORS FOR MISSINGS OR MISPLACED ANCHORS.

2. CARE SHALL BE GIVEN TO AVOID CONFLICTS WITH EXISTING REINFORCING WHEN DRILLING HOLES. HOLES SHALL BE DRILLED AND CLEANED PER THE MANUFACTURER'S INSTRUCTIONS. ANCHORS SHALL BE INSTALLED PER THE MANUFACTURER'S INSTALLATION INSTRUCTIONS AT NOT LESS THAN MINIMUM EDGE DISTANCES AND/OR SPACINGS INDICATED IN THE MANUFACTURER'S LITERATURE.

3. SPECIAL INSPECTION SHALL BE PROVIDED FOR ALL ADHESIVE AND MECHANICAL ANCHOR INSTALLATIONS AS REQUIRED BY THE EOR. INDEPENDENT ON-SITE PROOF LOAD TESTING SHALL BE PERFORMED AS REQUIRED BY THE EOR. CONTACT EOR FOR NUMBER OF ANCHORS REQUIRED TO BE TESTED AND REQUIRED PROOF LOAD MAGNITUDE.

Gdh.Hoandedhdhoo School 2 Classroom, ICT & Lab Block (2 story)
Client: Ministry of Education

Project Number: RI/2020/006
Date: March 2021
Architect : Mariyam Irasha Shareef
Engineer : Mohamed Muththalib Waleed
Drawn by : Mariyam Irasha Shareef
Services : Aishath Ahmed
Interior : -

Rev no	Date
--	----------
--	----------
--	----------
--	----------

RIYAN PRIVATE LIMITED

t : +9603315049   f : +9603310776
e : info@riyan.com.mv
w : www.riyan.com.mv
3rd floor, H. Azum, Ameeneemagu, Male'

Title: General Notes

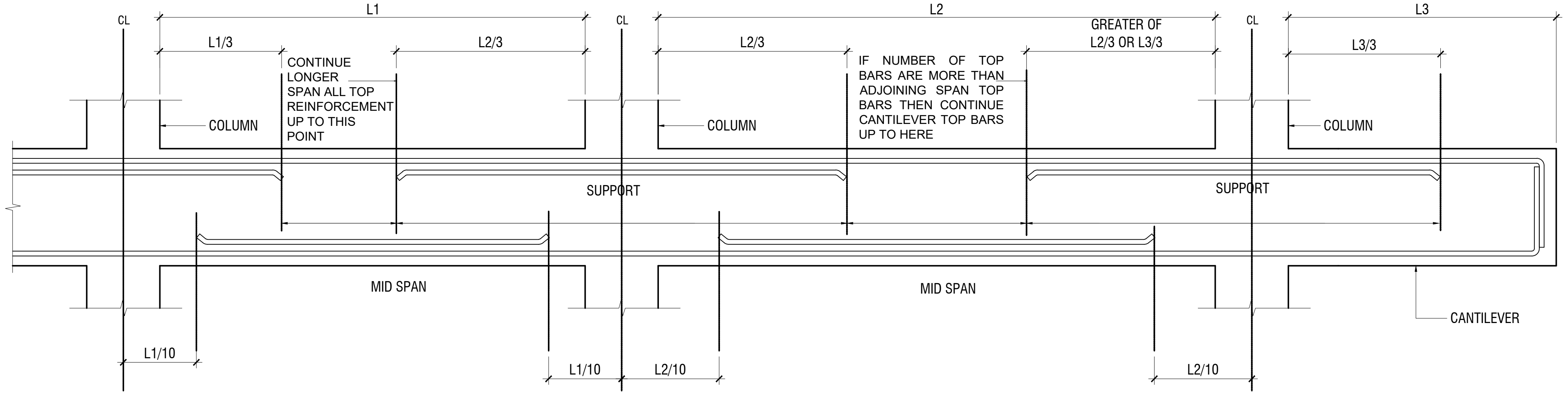
CL
L1
CL
L2
CL
L3
L1/3
L2/3
L2/3
GREATER OF L2/3 OR L3/3
L3/3
CONTINUE LONGER SPAN ALL TOP REINFORCEMENT UP TO THIS POINT
IF NUMBER OF TOP BARS ARE MORE THAN ADJOINING SPAN TOP BARS THEN CONTINUE CANTILEVER TOP BARS UP TO HERE
COLUMN
COLUMN
COLUMN
SUPPORT
SUPPORT
MID SPAN
MID SPAN
CANTILEVER
L1/10
L1/10
L2/10
L2/10

L1 = SHORTER SPAN
L2 = LONGER SPAN
L3 = CANTILEVER LENGTH

SIMPLIFIED DETAILING RULES FOR BEAMS (BS8110-1)

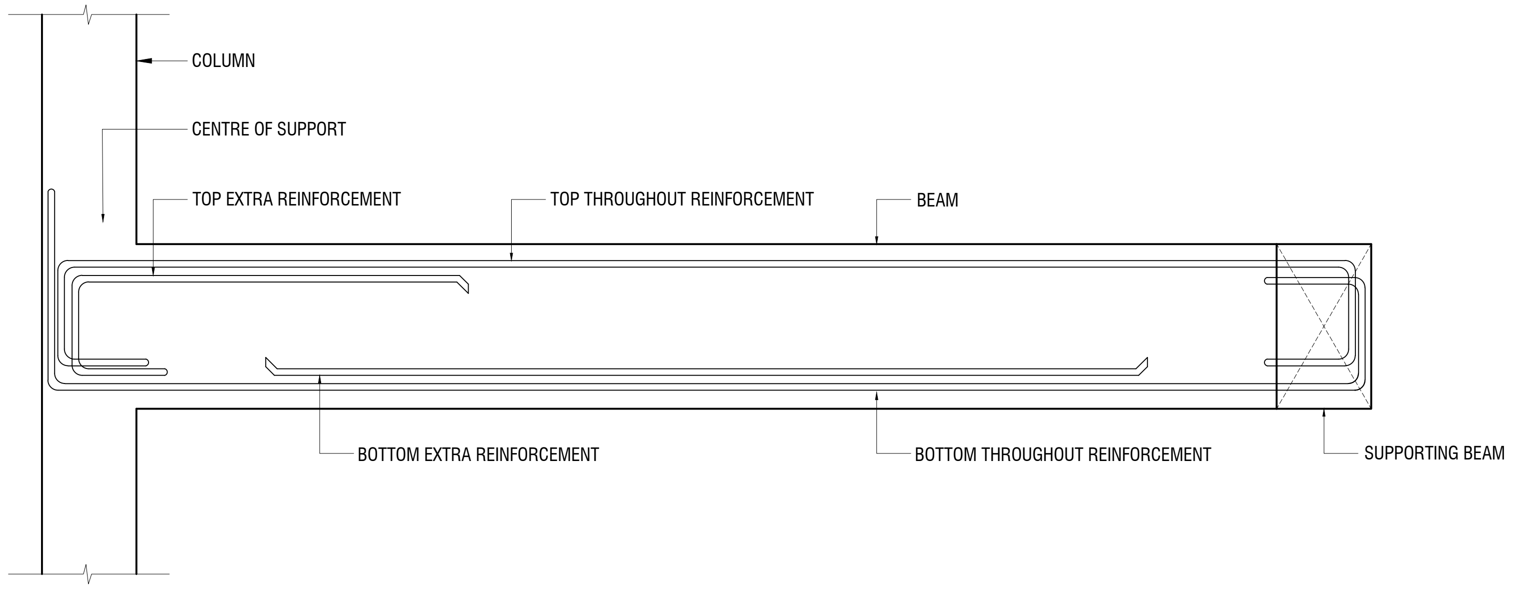
COLUMN
CENTRE OF SUPPORT
TOP EXTRA REINFORCEMENT
TOP THROUGHOUT REINFORCEMENT
BEAM
BOTTOM EXTRA REINFORCEMENT
BOTTOM THROUGHOUT REINFORCEMENT
SUPPORTING BEAM

LONGITUDINAL SECTION OF TYPICAL SLAB BEAM SPANNING BETWEEN A COLUMN AND BEAM
SHOWING END SPAN MID SPAN REINFORCEMENT DETAILS

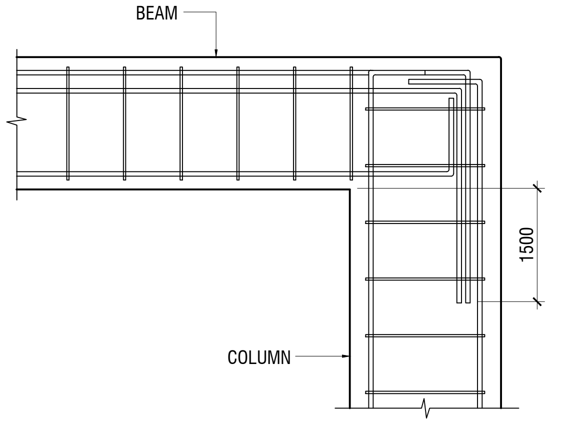
BEAM
1500
COLUMN

END COLUMN TO BEAM CONNECTION

NOTE:
STANDARD DETAILS GIVEN HERE ALSO APPLIES TO FOUNDATION MEMBERS
OTHER DETAILS NOT FOUND HERE SHALL BE REFEREED TO IN RELEVANT BS
CODES OR SHALL BE APPROVED BY CLIENT'S ENGINEER

Gdh.Hoandedhdhoo School 2 Classroom, ICT & Lab Block (2 story)
Client: Ministry of Education

Project Number: RI/2020/006
Date: March 2021
Architect : Mariyam Irasha Shareef
Engineer : Mohamed Muththalib Waleed
Drawn by : Mariyam Irasha Shareef
Services : Aishath Ahmed
Interior : -

Rev no	Date
-	-----------
-	-----------
-	-----------

RIYAN PRIVATE LIMITED

t : +9603315049 **f** : +9603310776
e : info@riyan.com.mv
w : www.riyan.com.mv
3rd floor, H. Azum, Ameeneemagu, Male'

Title: General Notes

Page: S-00/12

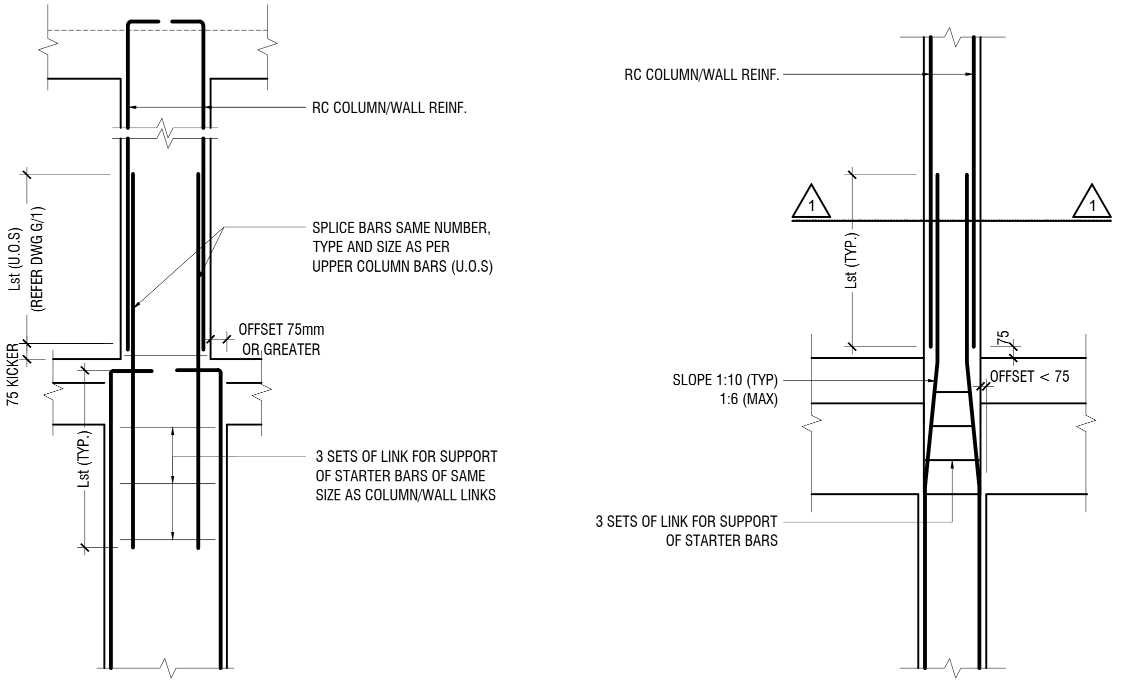
RC COLUMN/WALL REINF.
SPLICE BARS SAME NUMBER, TYPE AND SIZE AS PER UPPER COLUMN BARS (U.O.S)
Lst (U.O.S) (REFER DWG G/1)
OFFSET 75mm OR GREATER
75 KICKER
Lst (TYP.)
3 SETS OF LINK FOR SUPPORT OF STARTER BARS OF SAME SIZE AS COLUMN/WALL LINKS
RC COLUMN/WALL REINF.
1
1
Lst (TYP.)
75
OFFSET < 75
SLOPE 1:10 (TYP) 1:6 (MAX)
3 SETS OF LINK FOR SUPPORT OF STARTER BARS

A) FOR COLUMN OFFSET > 75mm

TO BE VERIFIED BY THE CONSULTING ENGINEER

B) FOR COLUMN OFFSET < 75mm

COLUMN/WALL REINF. LAPPING DETAIL AT FLOOR LEVEL

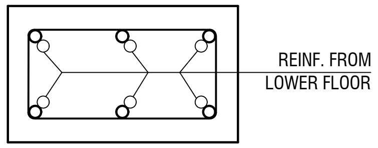
REINF. FROM LOWER FLOOR

SECTION-1-1

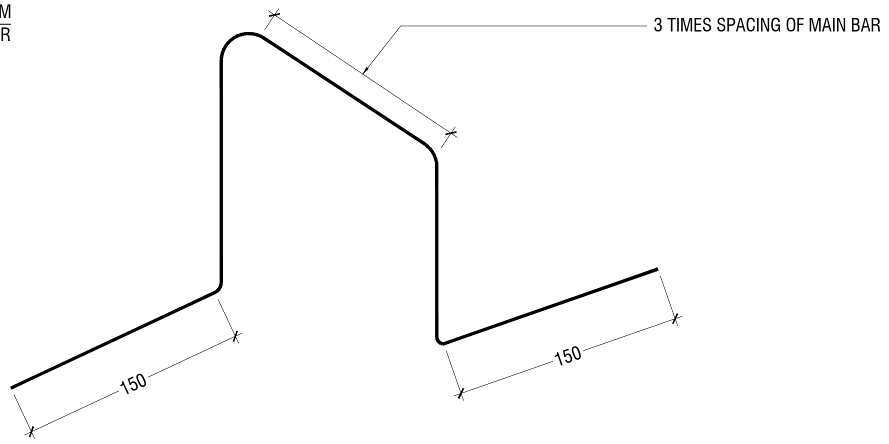
3 TIMES SPACING OF MAIN BAR
150
150

TYPICAL CHAIR DETAIL

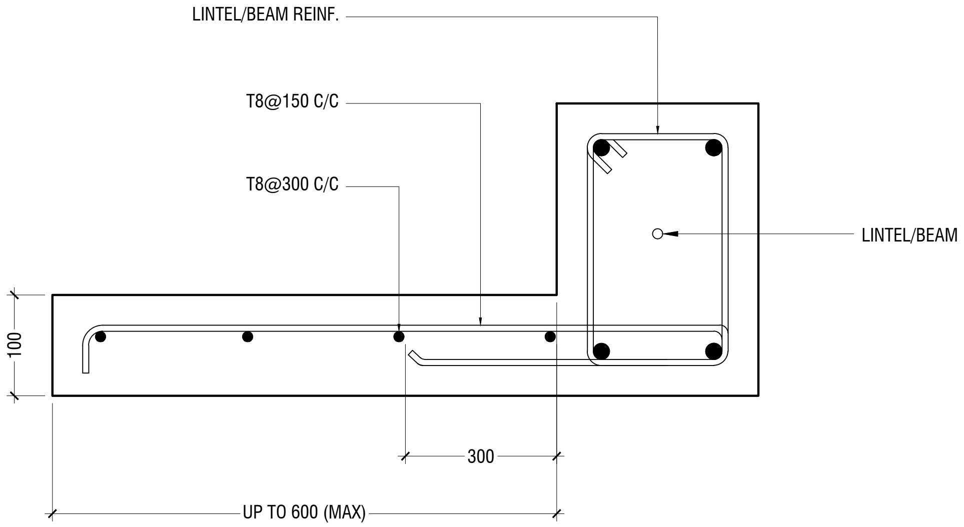
LINTEL/BEAM REINF.
T8@150 C/C
T8@300 C/C
LINTEL/BEAM
100
300
UP TO 600 (MAX)

TYPICAL CANTILEVER DETAILS

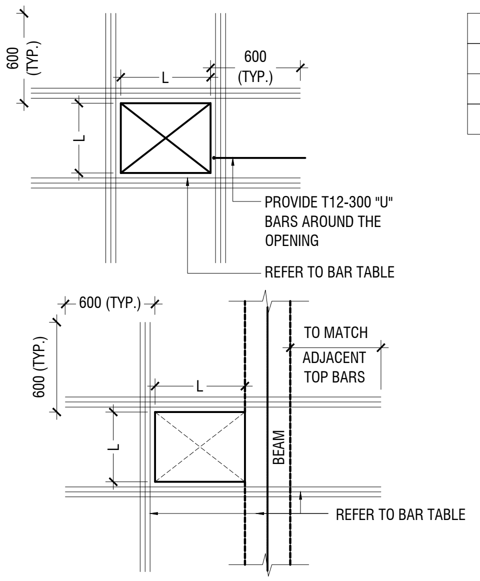
600 (TYP.)
600 (TYP.)
L
L
PROVIDE T12-300 "U" BARS AROUND THE OPENING
REFER TO BAR TABLE
600 (TYP.)
600 (TYP.)
TO MATCH ADJACENT TOP BARS
L
L
BEAM
REFER TO BAR TABLE

FLOOR OPENING (L)	ADD BARS
LESS THAN 250	3T12 T & B
L = > 250 < 500	3T16 T & B
L = ⩾ 500 < 1000	3T16 T & B

NOTE:-
1. FOR OPENINGS LESS THAN 200x200. SLAB REBARS TO BE ADJUSTED AROUND OPENING.
2. FOR OPENINGS GREATER THAN 250x250 TO BE APPROVED BY THE ENGINEER.
3. ALL SLAB OPENINGS LOCATION TO BE APPROVED BY THE ENGINEER.
4. EQUIVALENT OPENING AREA SHALL APPLY THE DETAILS SHOWN ABOVE.
5. EQUIVALENT OPENING AREA SHALL INCLUDE RECTANGLE, TRIANGLE AND ANY POLYGON SHAPE.
6. EXCEPT HACKING, NO SLAB CORING ARE ADVISABLE FOR POST-TENSIONED SLAB.

TYPICAL TRIMMER BARS DETAILS FOR OPENING IN SLABS

Gdh.Hoandedhdhoo School 2 Classroom, ICT & Lab Block (2 story)
Client: Ministry of Education

Project Number: RI/2020/006
Date: March 2021
Architect : Mariyam Irasha Shareef
Engineer : Mohamed Muththalib Waleed
Drawn by : Mariyam Irasha Shareef
Services : Aishath Ahmed
Interior : -

Rev no	Date
--	----------------
--	----------------
--	----------------
--	----------------

RIYAN PRIVATE LIMITED

t : +9603315049 f : +9603310776
e : info@riyan.com.mv
w : www.riyan.com.mv
3rd floor, H. Azum, Ameeneemagu, Male'

Title: General Notes

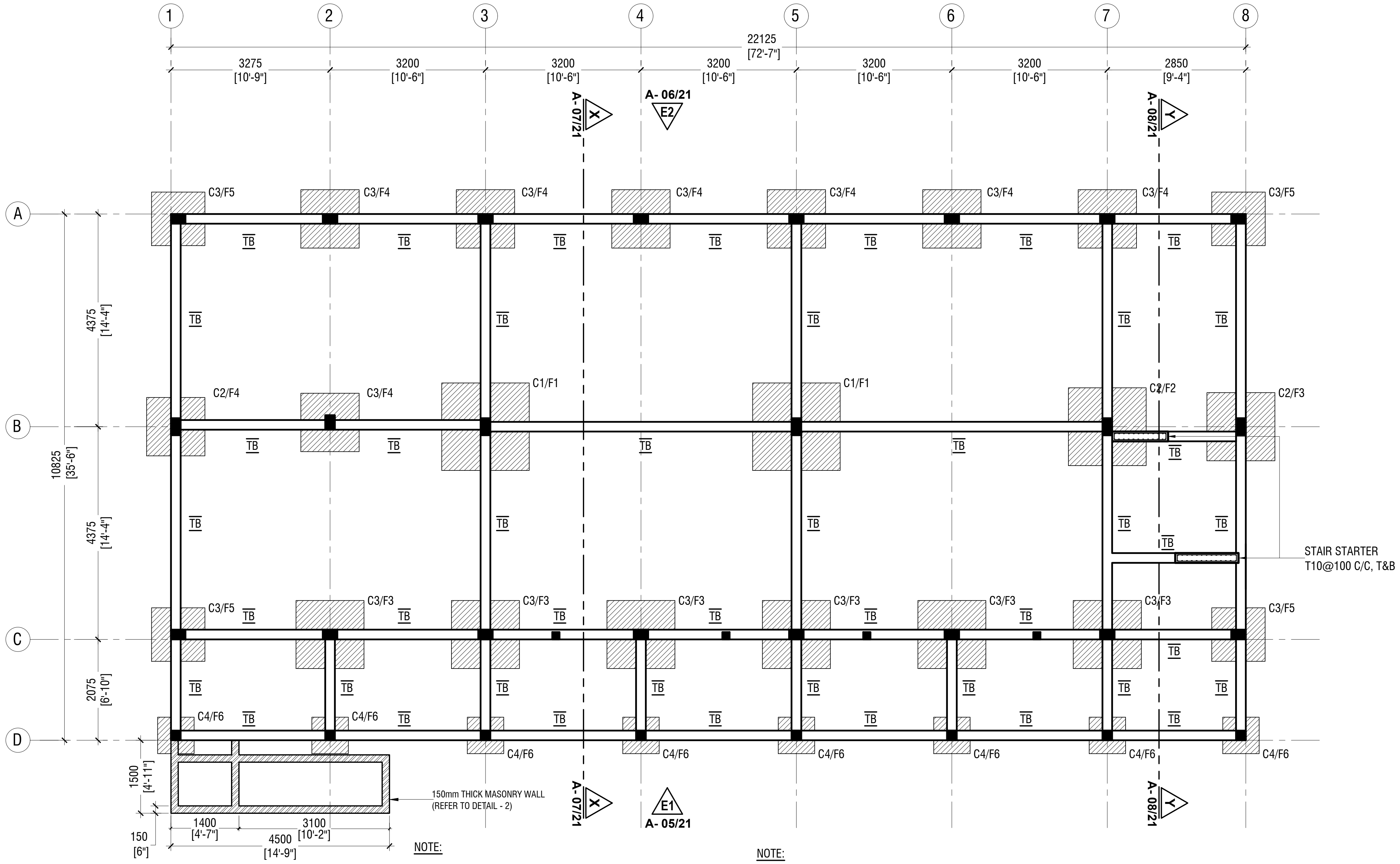
1
2
3
4
5
6
7
8
22125
[72'-7"]
3275
[10'-9"]
3200
[10'-6"]
3200
[10'-6"]
3200
[10'-6"]
3200
[10'-6"]
3200
[10'-6"]
2850
[9'-4"]
A- 07/21
X
A- 06/21
E2
A- 08/21
Y
A
B
C
D
10825
[35'-6"]
4375
[14'-4"]
4375
[14'-4"]
2075
[6'-10"]
C3/F5
C3/F4
C3/F4
C3/F4
C3/F4
C3/F4
C3/F4
C3/F5
TB
C2/F4
C3/F4
C1/F1
C1/F1
C2/F2
C2/F3
STAIR STARTER
T10@100 C/C, T&B
C3/F5
C3/F3
C3/F3
C3/F3
C3/F3
C3/F3
C3/F3
C3/F5
C4/F6
C4/F6
C4/F6
C4/F6
C4/F6
C4/F6
C4/F6
C4/F6
1500
[4'-11"]
150mm THICK MASONRY WALL
(REFER TO DETAIL - 2)
150
[6"]
1400
[4'-7"]
3100
[10'-2"]
4500
[14'-9"]
A- 07/21
X
E1
A- 05/21
A- 08/21
Y

FOUNDATION PLAN

SCALE 1:100

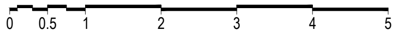

NOTE:

COLUMN SIZES

C1	: 200 x 350 mm
C2	: 200 x 350 mm
C3	: 200 x 300 mm
C4	: 200 x 200 mm
SC	: 150 x 150 mm
COVER	: 40mm

FOUNDATION PAD SIZES

	DIMENSION	REINFORCEMENT
F1	1800 x 1800 x 300	T16@150 C/C B/W (B)
F2	1600 x 1600 x 300	T12@150 C/C B/W (B)
F3	1400 x 1400 x 300	T12@150 C/C B/W (B)
F4	1200 x 1200 x 300	T12@150 C/C B/W (B)
F5	1100 x 1100 x 300	T12@150 C/C B/W (B)
F6	750 x 750 x 300	T12@150 C/C B/W (B)

NOTE:

CONCRETE COVER

COLUMN	: 40mm
SLAB	: 30mm
BEAM	: 35mm
FOOTING	: 50mm
TIE BEAM	: 50mm

LAP LENGTH FOR BARS

25MM	: 1125 mm
20MM	: 900 mm
16MM	: 720 mm
12MM	: 550 mm
10MM	: 450 mm

CONCRETE GRADE = M25

SAFE BEARING CAPACITY = 150KPa

HOOK LENGTH AND OTHER DETAILS ARE PROVIDED IN THE GENERAL NOTES

FOUNDATION DEPTH : 1200mm BELOW GROUND LEVEL

ALL FOOTINGS ARE TO BE LAID ON TOP OF 50mm THICK LEAN CONCRETE
APPLY WATER PROOFING TO SUBSTRUCTURE
(BELOW GROUND ELEMENTS)

TIE BEAM SIZES

TB	: 200 x 450 mm
COVER	: 50mm

GROUND SLAB : 100mm THK RC SLAB ON FILL
REINFORCED WITH T10@200 C/C BW

▨ -150mm THK. SOLID MASONRY BLOCK WALL

RAMP SLAB : 100mm THK RC SLAB ON COMPACTED FILL
REINFORCED WITH T10@200 C/C BW

Gdh.Hoandedhdhoo School 2 Classroom, ICT & Lab Block (2 story)
Client: Ministry of Education

Project Number: RI/2020/006
Date: March 2021
Architect : Mariyam Irasha Shareef
Engineer : Mohamed Muththalib Waleed
Drawn by : Mariyam Irasha Shareef
Services : Aishath Ahmed
Interior : -

Rev no	Date
--	------------
--	------------
--	------------
--	------------

RIYAN PRIVATE LIMITED

t : +9603315049 **f :** +9603310776
e : info@riyan.com.mv
w : www.riyan.com.mv
3rd floor, H. Azum, Ameeneemagu, Male'

Title: Foundation Plan

Page: S-01/12

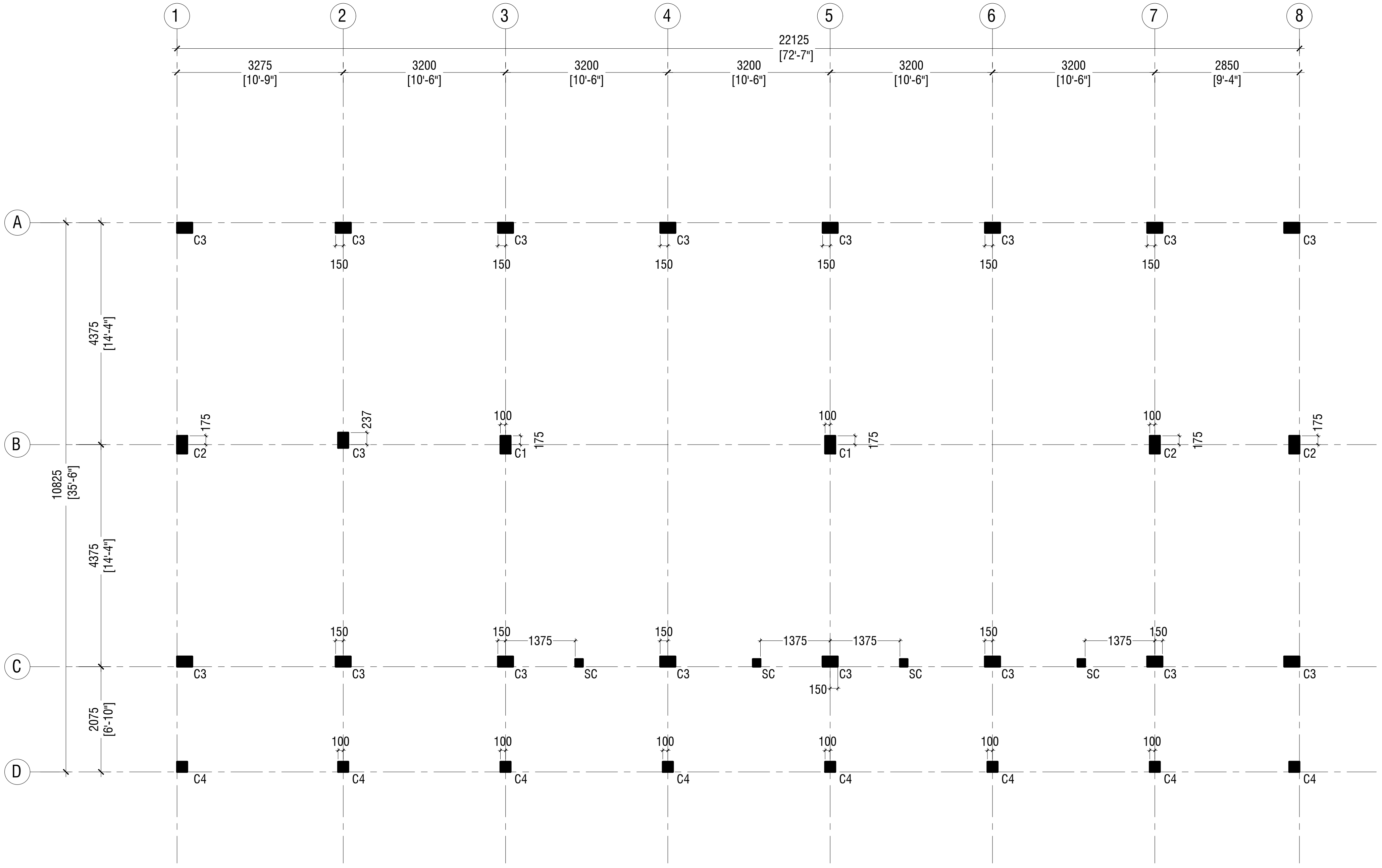
1
2
3
4
5
6
7
8
22125
[72'-7"]
3275
[10'-9"]
3200
[10'-6"]
2850
[9'-4"]
A
B
C
D
10825
[35'-6"]
4375
[14'-4"]
2075
[6'-10"]
C1
C2
C3
C4
SC
150
100
175
237
1375

NOTE:

COLUMN SIZES

C1	: 200 x 350 mm
C2	: 200 x 350 mm
C3	: 200 x 300 mm
C4	: 200 x 200 mm
SC	: 150 x 150 mm
COVER	: 40mm

FIRST FLOOR COLUMN LAYOUT PLAN

SCALE 1:100

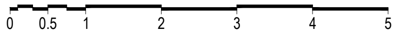

Gdh.Hoandedhdhoo School 2 Classroom, ICT & Lab Block (2 story)
Client: Ministry of Education

Project Number: RI/2020/006
Date: March 2021
Architect : Mariyam Irasha Shareef
Engineer : Mohamed Muththalib Waleed
Drawn by : Mariyam Irasha Shareef
Services : Aishath Ahmed
Interior : -

Rev no	Date
--	----------
--	----------
--	----------
--	----------

RIYAN PRIVATE LIMITED

t : +9603315049 f : +9603310776
e : info@riyan.com.mv
w : www.riyan.com.mv
3rd floor, H. Azum, Ameeneemagu, Male'

Title: First Floor Column Layout Plan

Page: S-02/12

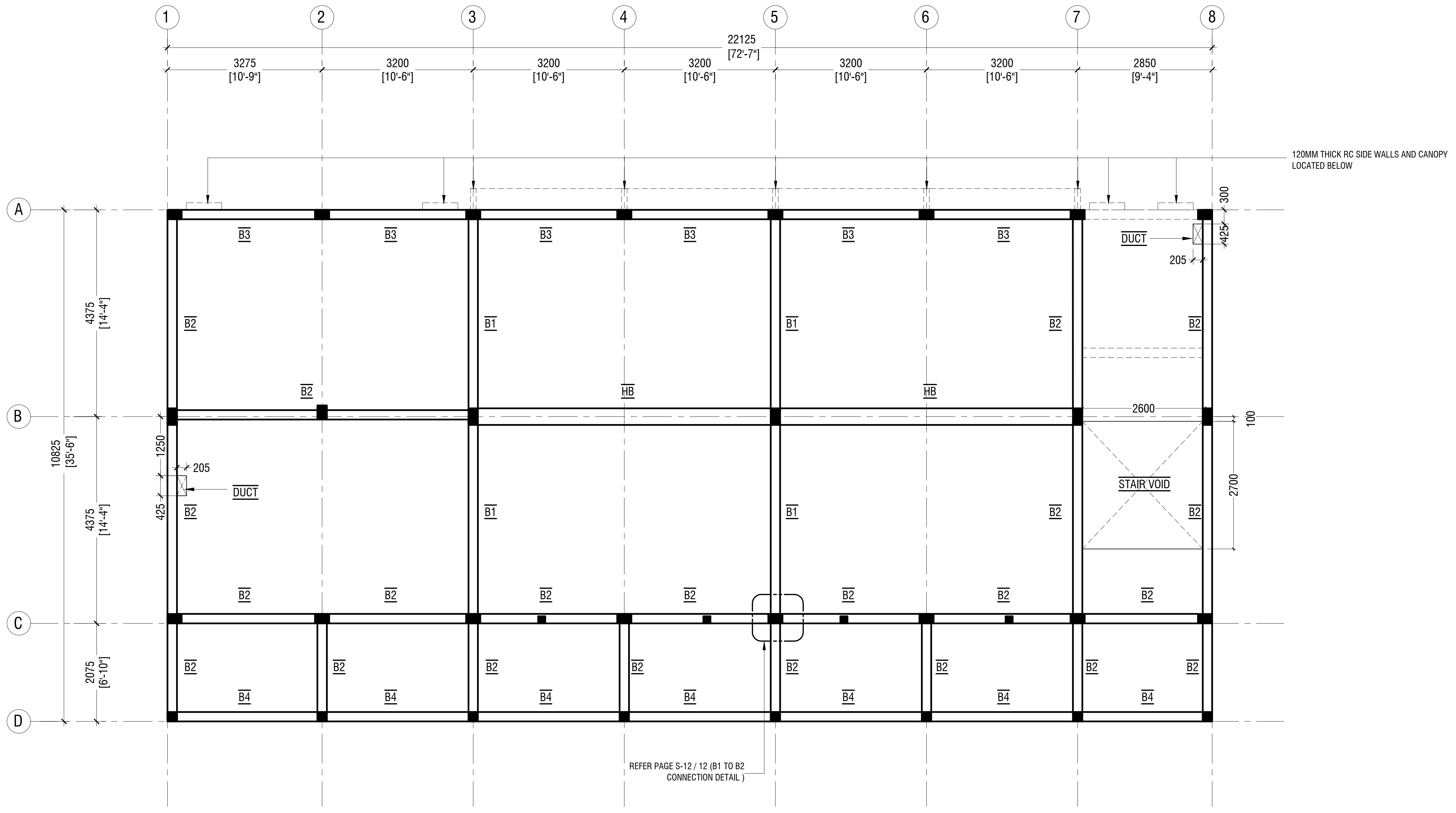
1
2
3
4
5
6
7
8
22125
[72'-7"]
3275
[10'-9"]
3200
[10'-6"]
3200
[10'-6"]
3200
[10'-6"]
3200
[10'-6"]
3200
[10'-6"]
2850
[9'-4"]
A
B
C
D
300
425
205
DUCT
4375
[14'-4"]
10825
[35'-6"]
4375
[14'-4"]
2075
[6'-10"]
1250
205
425
DUCT
2600
100
2700
STAIR VOID
B1
B2
B3
B4
HB

120MM THICK RC SIDE WALLS AND CANOPY LOCATED BELOW

REFER PAGE S-12 / 12 (B1 TO B2 CONNECTION DETAIL)

FIRST FLOOR BEAM PLAN

SCALE 1:100

0 0.5 1 2 3 4 5

NOTE:

BEAM SIZES

B1	: 200x475 mm
B2	: 200x400 mm
B3	: 200x400 mm
B4	: 200x400 mm
HB	: 350x180 mm
COVER	: 35mm

Gdh.Hoandedhdhoo School 2 Classroom, ICT & Lab Block (2 story)
Client: Ministry of Education

Project Number: RI/2020/006
Date: March 2021
Architect : Mariyam Irasha Shareef
Engineer : Mohamed Muththalib Waleed
Drawn by : Mariyam Irasha Shareef
Services : Aishath Ahmed
Interior : -

Rev no	Date
--	----------------
--	----------------
--	----------------
--	----------------

RIYAN PRIVATE LIMITED

t : +9603315049 **f :** +9603310776
e : info@riyan.com.mv
w : www.riyan.com.mv
3rd floor, H. Azum, Ameeneemagu, Male'

Title: First Floor Beam Plan

Page: S-03/12

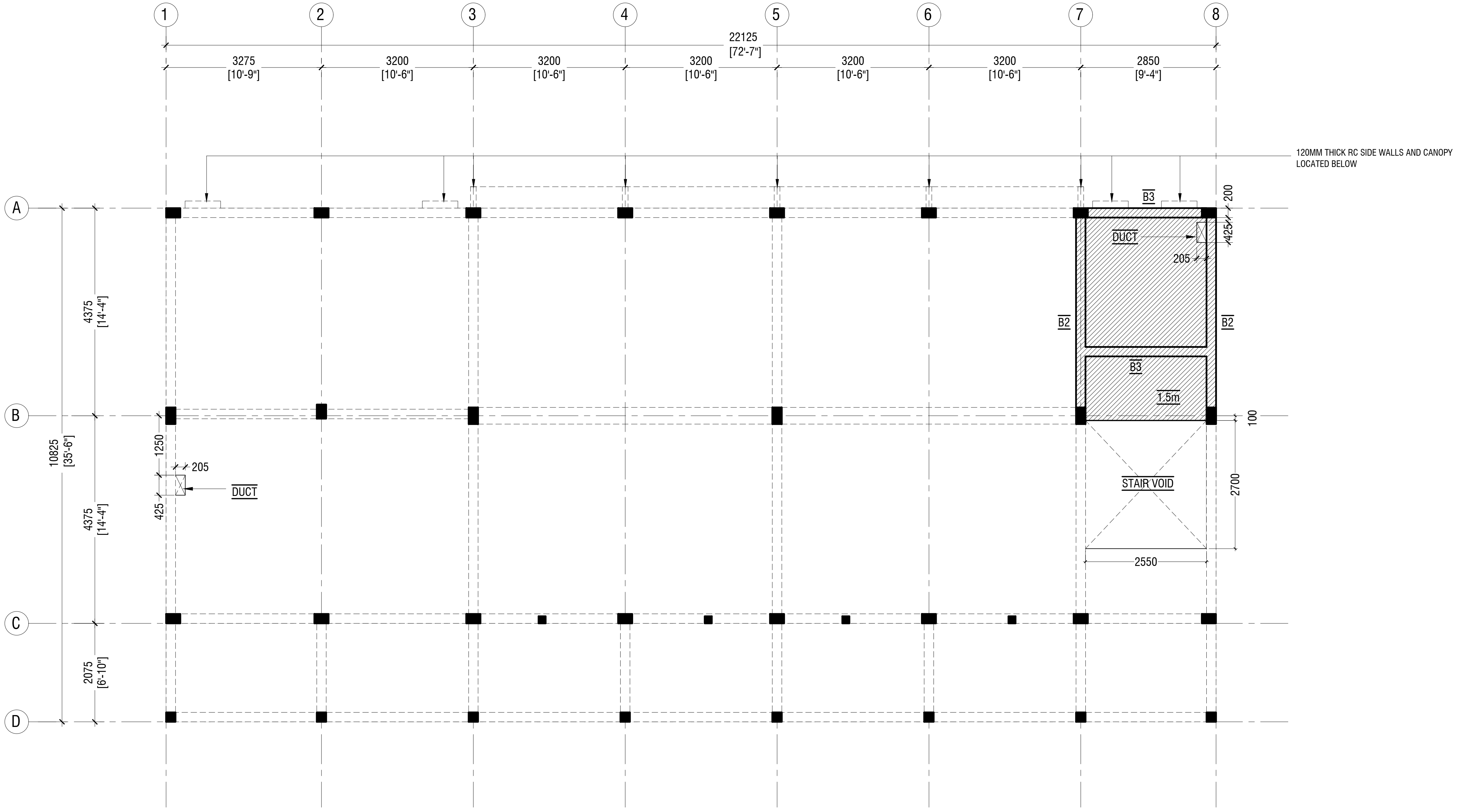
1
2
3
4
5
6
7
8
22125
[72'-7"]
3275
[10'-9"]
3200
[10'-6"]
3200
[10'-6"]
3200
[10'-6"]
3200
[10'-6"]
3200
[10'-6"]
2850
[9'-4"]
120MM THICK RC SIDE WALLS AND CANOPY LOCATED BELOW
A
B
C
D
4375
[14'-4"]
4375
[14'-4"]
2075
[6'-10"]
10825
[35'-6"]
B3
200
425
DUCT
205
B2
B2
B3
1.5m
100
1250
205
DUCT
425
STAIR VOID
2700
2550

STORE / HALF LANDING FLOOR BEAM & SLAB REINFORCEMENT PLAN (+1865)

SCALE 1:100

0 0.5 1 2 3 4 5

NOTE:

BEAM SIZES

B1	: 200x475 mm
B2	: 200x400 mm
B3	: 200x400 mm
B4	: 200x400 mm
COVER	: 35mm

▨ SLAB THICKNESS: 150mm

REINFORCEMENT: T10@150C/C B/W (T&B)

ALL REINFORCEMENT TO BE DISCONTINUOUS OVER THE VOIDS

Gdh.Hoandedhdhoo School 2 Classroom, ICT & Lab Block (2 story)
Client: Ministry of Education

Project Number: RI/2020/006
Date: March 2021
Architect : Mariyam Irasha Shareef
Engineer : Mohamed Muththalib Waleed
Drawn by : Mariyam Irasha Shareef
Services : Aishath Ahmed
Interior : -

Rev no	Date
-	----------
-	----------
-	----------
-	----------

RIYAN PRIVATE LIMITED

t : +9603315049 f : +9603310776
e : info@riyan.com.mv
w : www.riyan.com.mv
3rd floor, H. Azum, Ameeneemagu, Male'

Title: Store / Half Landing
Beam & Slab Rein. Plan

Page: S-04/12

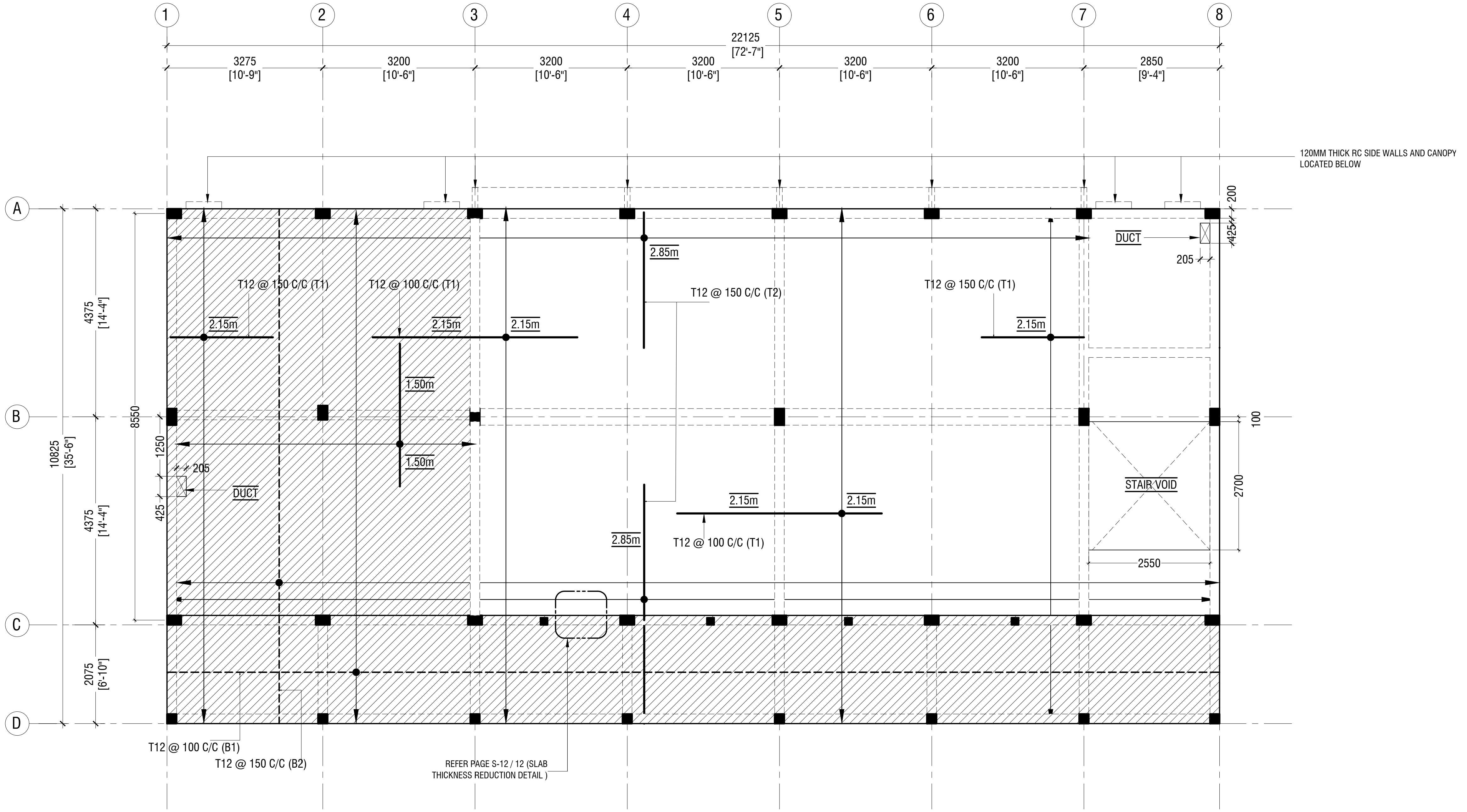
1
2
3
4
5
6
7
8
22125
[72'-7"]
3275
[10'-9"]
3200
[10'-6"]
2850
[9'-4"]
120MM THICK RC SIDE WALLS AND CANOPY LOCATED BELOW
A
B
C
D
200
425
205
DUCT
100
2700
STAIR VOID
2550
4375
[14'-4"]
10825
[35'-6"]
8550
1250
2075
[6'-10"]
T12 @ 150 C/C (T1)
T12 @ 100 C/C (T1)
T12 @ 150 C/C (T2)
2.15m
2.85m
1.50m
T12 @ 100 C/C (T1)
T12 @ 100 C/C (B1)
T12 @ 150 C/C (B2)
REFER PAGE S-12 / 12 (SLAB THICKNESS REDUCTION DETAIL)

FIRST FLOOR SLAB REINFORCEMENT PLAN

SCALE 1:100

0 0.5 1 2 3 4 5

NOTE

☐	SLAB THICKNESS:	180mm
▨	SLAB THICKNESS:	135mm
- - -	BOTTOM REINFORCEMENT:	T12@100 C/C ALONG SHORT DIRECTION (B1) (AS SHOWN) T12@150 C/C ALONG LONG SPAN (B2) (AS SHOWN)
—	TOP REINFORCEMENT:	T12@150C/C (AS SHOWN, UNLESS STATED)
	TOP DISTRIBUTION STEEL:	T12@150C/C (NOT SHOWN)
	COVER :	30mm

Gdh.Hoandedhdhoo School 2 Classroom, ICT & Lab Block (2 story)
Client: Ministry of Education

Project Number: RI/2020/006
Date: March 2021
Architect : Mariyam Irasha Shareef
Engineer : Mohamed Muththalib Waleed
Drawn by : Mariyam Irasha Shareef
Services : Aishath Ahmed
Interior : -

Rev no	Date
--	------------
--	------------
--	------------
--	------------

RIYAN PRIVATE LIMITED
t : +9603315049 f : +9603310776
e : info@riyan.com.mv
w : www.riyan.com.mv
3rd floor, H. Azum, Ameeneemagu, Male'

Title: First Floor Slab Reinforcement Plan

Page: S-05/12

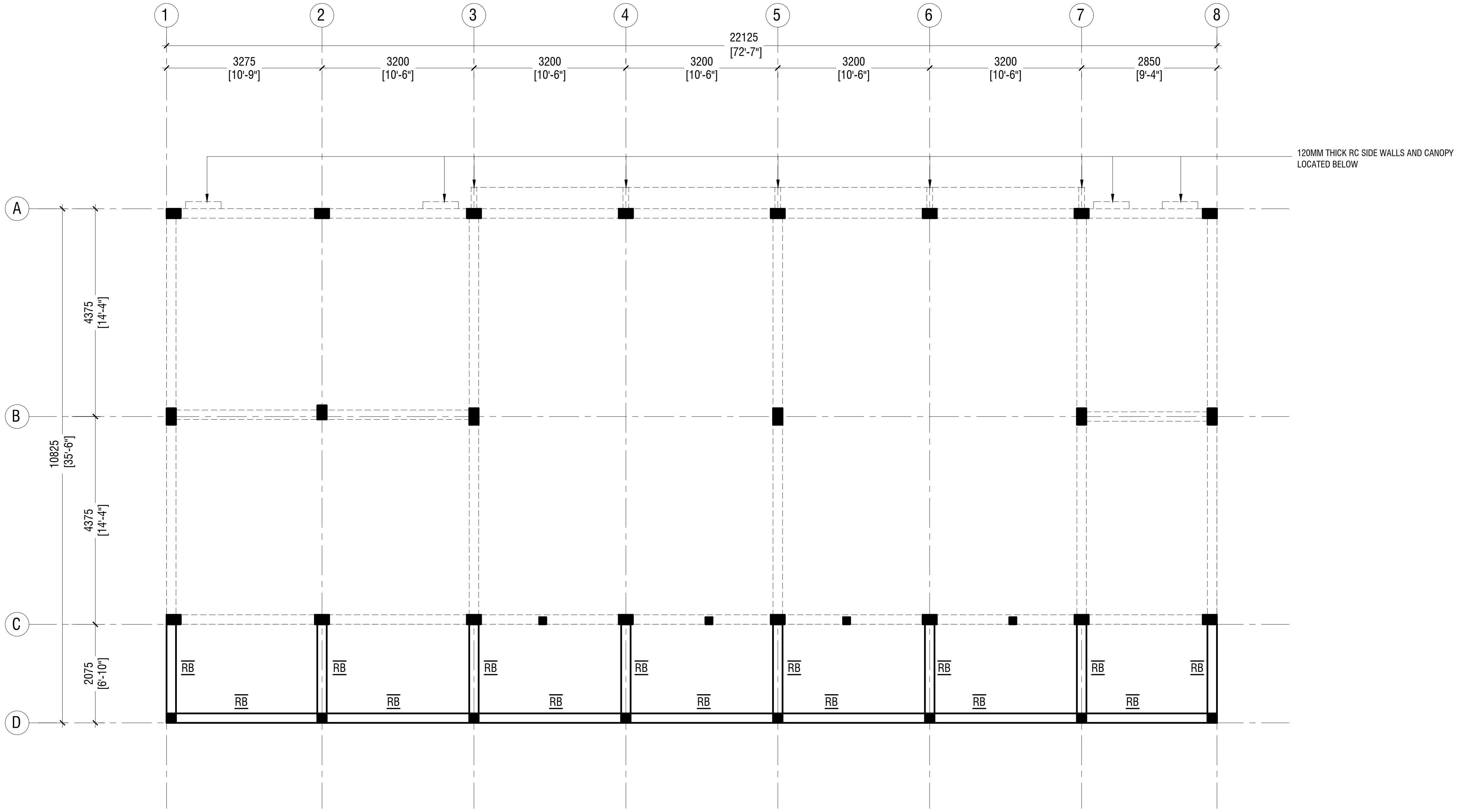
1
2
3
4
5
6
7
8
22125
[72'-7"]
3275
[10'-9"]
3200
[10'-6"]
3200
[10'-6"]
3200
[10'-6"]
3200
[10'-6"]
3200
[10'-6"]
2850
[9'-4"]
120MM THICK RC SIDE WALLS AND CANOPY
LOCATED BELOW
A
B
C
D
4375
[14'-4"]
4375
[14'-4"]
2075
[6'-10"]
10825
[35'-6"]
RB
RB
RB
RB
RB
RB
RB
RB
RB
RB
RB
RB
RB
RB
RB
RB

NOTE:

BEAM SIZES

RB : 200x300 mm
COVER : 35mm

ROOF BEAM PLAN - 1 @6.15m FROM F.F.L

SCALE 1:100

0 0.5 1 2 3 4 5

Gdh.Hoandedhdhoo School 2 Classroom, ICT & Lab Block (2 story)
Client: Ministry of Education

Project Number: RI/2020/006
Date: March 2021
Architect : Mariyam Irasha Shareef
Engineer : Mohamed Muththalib Waleed
Drawn by : Mariyam Irasha Shareef
Services : Aishath Ahmed
Interior : -

Rev no	Date
--	------------
--	------------
--	------------
--	------------

RIYAN PRIVATE LIMITED

t : +9603315049 f : +9603310776
e : info@riyan.com.mv
w : www.riyan.com.mv
3rd floor, H. Azum, Ameeneemagu, Male'

Title: Roof Beam Plan 1

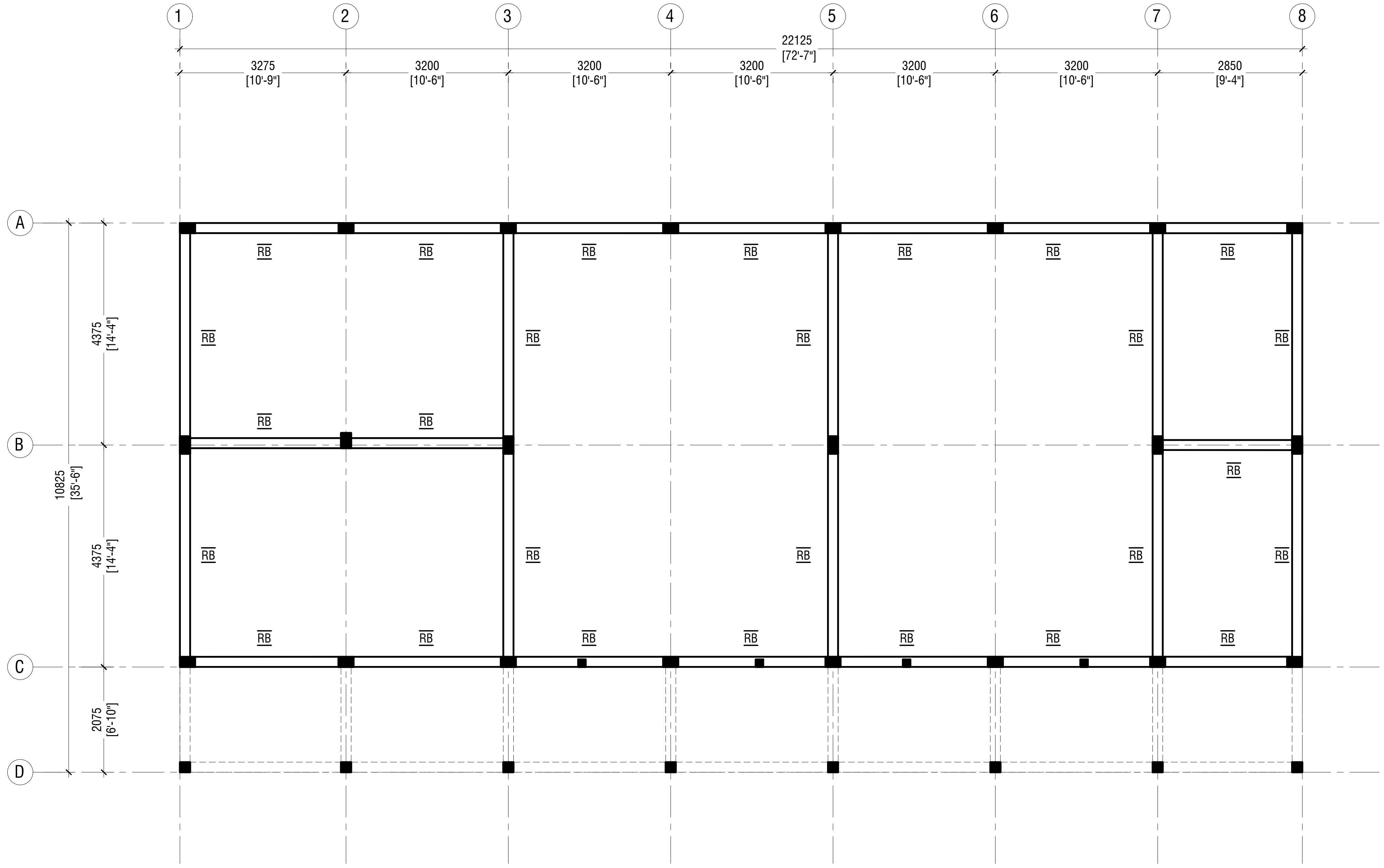
1
2
3
4
5
6
7
8
22125
[72'-7"]
3275
[10'-9"]
3200
[10'-6"]
3200
[10'-6"]
3200
[10'-6"]
3200
[10'-6"]
3200
[10'-6"]
2850
[9'-4"]
A
B
C
D
10825
[35'-6"]
4375
[14'-4"]
4375
[14'-4"]
2075
[6'-10"]
RB
RB
RB
RB
RB
RB
RB
RB
RB
RB
RB
RB
RB
RB
RB
RB
RB
RB
RB
RB
RB
RB
RB
RB
RB
RB
RB

NOTE:

BEAM SIZES

RB	: 200x300 mm
COVER	: 35mm

ROOF BEAM PLAN - 2 @6.706 FROM F.F.L

SCALE 1:100

0 0.5 1 2 3 4 5

Gdh.Hoandedhdhoo School 2 Classroom, ICT & Lab Block (2 story)
Client: Ministry of Education

Project Number: RI/2020/006
Date: March 2021
Architect : Mariyam Irasha Shareef
Engineer : Mohamed Muththalib Waleed
Drawn by : Mariyam Irasha Shareef
Services : Aishath Ahmed
Interior : -

Rev no	Date
--	------------
--	------------
--	------------
--	------------

RIYAN PRIVATE LIMITED

t : +9603315049 f : +9603310776
e : info@riyan.com.mv
w : www.riyan.com.mv
3rd floor, H. Azum, Ameeneemagu, Male'

Title: Roof Beam Plan 2

Page: S-07/12

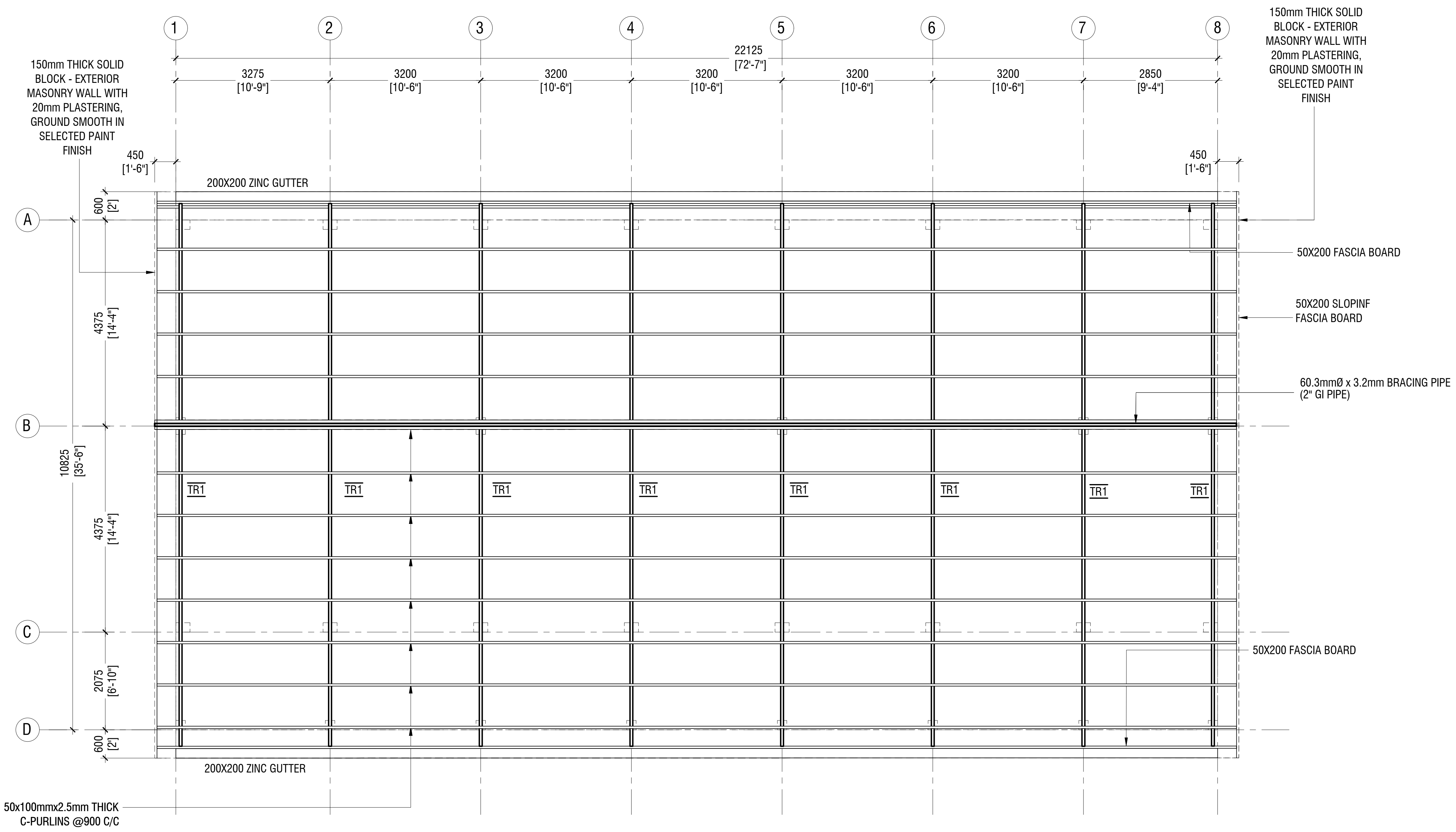
1
2
3
4
5
6
7
8
22125
[72'-7"]
3275
[10'-9"]
3200
[10'-6"]
3200
[10'-6"]
3200
[10'-6"]
3200
[10'-6"]
3200
[10'-6"]
2850
[9'-4"]
150mm THICK SOLID BLOCK - EXTERIOR MASONRY WALL WITH 20mm PLASTERING, GROUND SMOOTH IN SELECTED PAINT FINISH
150mm THICK SOLID BLOCK - EXTERIOR MASONRY WALL WITH 20mm PLASTERING, GROUND SMOOTH IN SELECTED PAINT FINISH
450
[1'-6"]
450
[1'-6"]
200X200 ZINC GUTTER
A
B
C
D
600
[2']
4375
[14'-4"]
10825
[35'-6"]
4375
[14'-4"]
2075
[6'-10"]
600
[2']
50X200 FASCIA BOARD
50X200 SLOPINF FASCIA BOARD
60.3mmØ x 3.2mm BRACING PIPE (2" GI PIPE)
TR1
TR1
TR1
TR1
TR1
TR1
TR1
TR1
50X200 FASCIA BOARD
200X200 ZINC GUTTER
50x100mmx2.5mm THICK C-PURLINS @900 C/C

ROOF TRUSS & FRAMING PLAN

SCALE 1:100

0 0.5 1 2 3 4 5

Gdh.Hoandedhdhoo School 2 Classroom, ICT & Lab Block (2 story)
Client: Ministry of Education

Project Number: RI/2020/006
Date: March 2021
Architect : Mariyam Irasha Shareef
Engineer : Mohamed Muththalib Waleed
Drawn by : Mariyam Irasha Shareef
Services : Aishath Ahmed
Interior : -

Rev no	Date
--	------------
--	------------
--	------------
--	------------

RIYAN PRIVATE LIMITED

t : +9603315049 f : +9603310776
e : info@riyan.com.mv
w : www.riyan.com.mv
3rd floor, H. Azum, Ameeneemagu, Male'

Title: Roof Truss and Framing Plan

Page: S-08/12

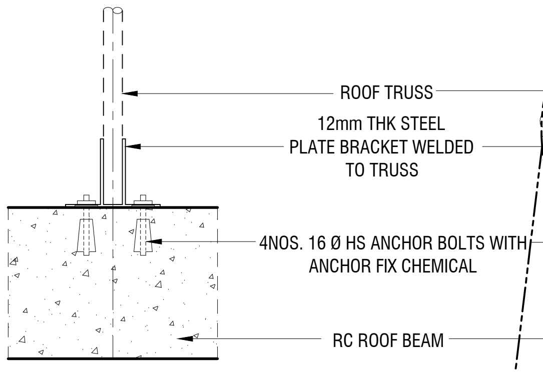
ROOF TRUSS
12mm THK STEEL PLATE BRACKET WELDED TO TRUSS
4NOS. 16 Ø HS ANCHOR BOLTS WITH ANCHOR FIX CHEMICAL
RC ROOF BEAM

ELEVATION

SCALE 1:20

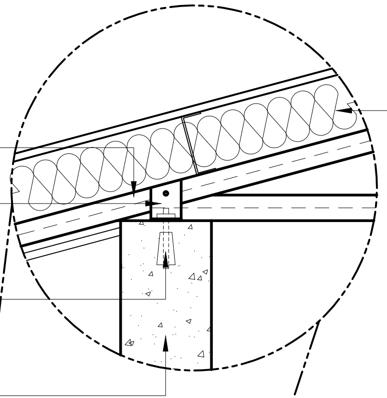
50mm MINERAL WOOL INSULATION IN BETWEEN C-SECTIONS

SECTION

SCALE 1:20

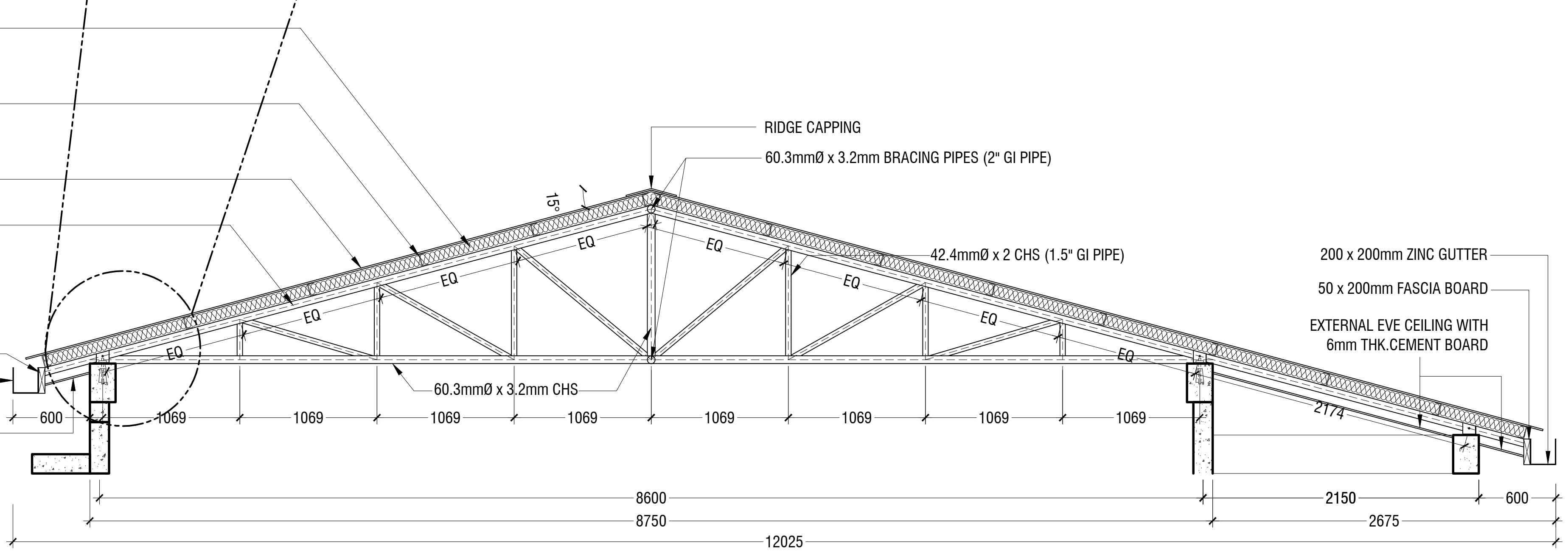
50mm MINERAL WOOL INSULATION IN BETWEEN C-SECTIONS
50x100x2.5mm THICK C SECTION PURLINS @ 900 C/C
LYSAGHT ROOFING SHEETS
60.3mmØ x 3.2mm CHS (2" GI PIPE)
50 x 200mm FASCIA BOARD
200 x 200mm ZINC GUTTER
EXTERNAL EVE CEILING WITH 6mm THK.CEMENT BOARD
RIDGE CAPPING
60.3mmØ x 3.2mm BRACING PIPES (2" GI PIPE)
42.4mmØ x 2 CHS (1.5" GI PIPE)
200 x 200mm ZINC GUTTER
50 x 200mm FASCIA BOARD
EXTERNAL EVE CEILING WITH 6mm THK.CEMENT BOARD
60.3mmØ x 3.2mm CHS
15°
EQ
EQ
EQ
EQ
EQ
EQ
EQ
EQ
2174
600
1069
1069
1069
1069
1069
1069
1069
1069
8600
2150
600
8750
2675
12025

TRUSS TYPE TR1

SCALE 1:50

0 0.25 0.5 1 1.5 2 2.5

NOTE
- CORROSION PROTECTION: GALVANIZED COATING THICKNESS SHALL NOT BE LESS THAN 80 MICRONS
- ALL FILLET WELDS TO BE 4mm THICK
- CONTRACTOR AND CONSULTANT TO CONFIRM ON SITE TRUSS SPAN AND DIMENSIONS BEFORE FABRICATION

Gdh.Hoandedhdhoo School 2 Classroom, ICT & Lab Block (2 story)
Client: Ministry of Education

Project Number: RI/2020/006
Date: March 2021
Architect : Mariyam Irasha Shareef
Engineer : Mohamed Muththalib Waleed
Drawn by : Mariyam Irasha Shareef
Services : Aishath Ahmed
Interior : -

Rev no	Date
--	------------
--	------------
--	------------
--	------------

RIYAN PRIVATE LIMITED

t : +9603315049 f : +9603310776
e : info@riyan.com.mv
w : www.riyan.com.mv
3rd floor, H. Azum, Ameeneemagu, Male'

Title: Truss Type TR1

Page: S-09/12

	DIMENSION (LXBXD)	REINFORCEMENT
F1	1800 x 1800 x 300	T16@150 C/C B/W (B)
F2	1600 x 1600 x 300	T12@150 C/C B/W (B)
F3	1400 x 1400 x 300	T12@150 C/C B/W (B)
F4	1200 x 1200 x 300	T12@150 C/C B/W (B)
F5	1100 x 1100 x 300	T12@150 C/C B/W (B)
F6	750 x 750 x 300	T12@150 C/C B/W (B)

FOUNDATION DEPTH = 1200mm

NOTE:-
COVER TO FOUNDATION = 50mm
COVER TO COLUMNS = 40mm
COVER TO BEAMS = 35mm
LAPS = Ø OF BAR x 45
BEAMS @END SUPPORT = Ø OF BAR x 12

CONCRETE GRADE = M25

FOUNDATION PADS

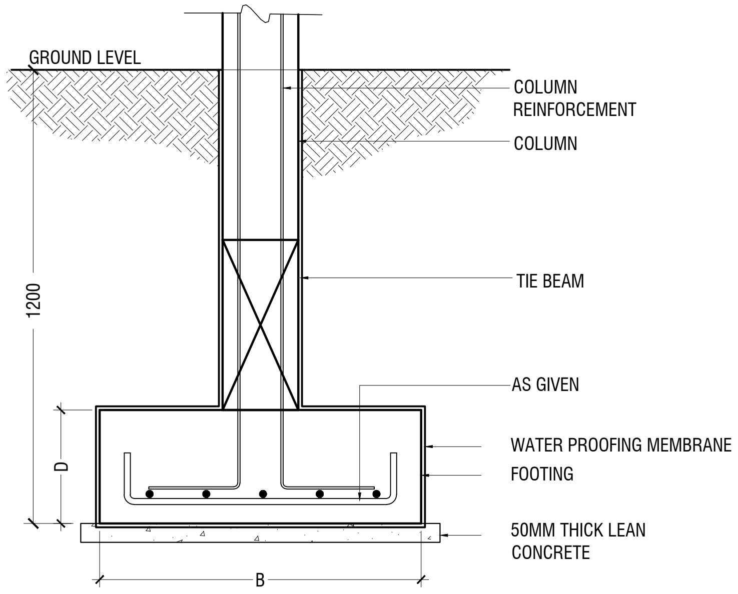
GROUND LEVEL
COLUMN REINFORCEMENT
COLUMN
TIE BEAM
AS GIVEN
WATER PROOFING MEMBRANE
FOOTING
50MM THICK LEAN CONCRETE
1200
D
B

TYPICAL FOOTING SECTION

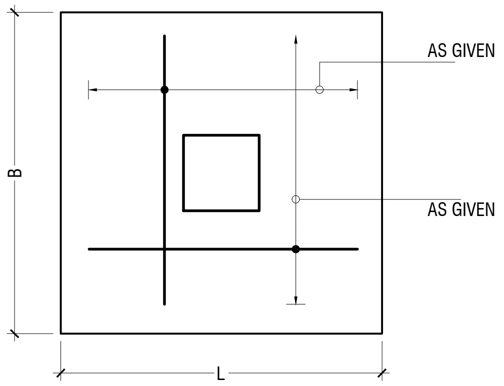
AS GIVEN
AS GIVEN
B
L

PLAN

TB	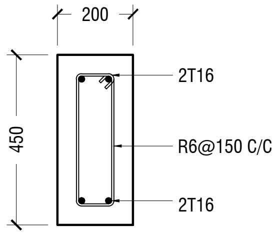

200
450
2T16
R6@150 C/C
2T16

FOUNDATION DETAILS

NOTE:-
TIE BEAM REINFORCEMENT TO GO THROUGH BETWEEN COLUMN REINFORCEMENT

	GROUND & 1ST FLOOR
C1	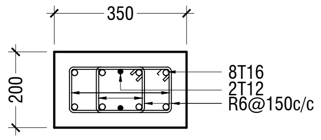
C2	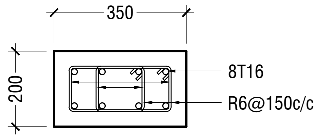
C3	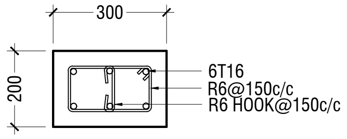
C4	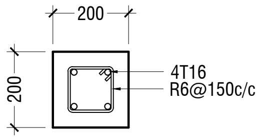
SC	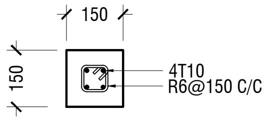

350
200
8T16
2T12
R6@150c/c
350
200
8T16
R6@150c/c
300
200
6T16
R6@150c/c
R6 HOOK@150c/c
200
200
4T16
R6@150c/c
150
150
4T10
R6@150 C/C

COLUMN DETAIL

STRUCTURAL DETAILS - 1

SCALE 1:20
0 0.1 0.2 0.4 0.6 0.8 1

Gdh.Hoandedhdhoo School 2 Classroom, ICT & Lab Block (2 story)
Client: Ministry of Education

Project Number: RI/2020/006
Date: March 2021
Architect : Mariyam Irasha Shareef
Engineer : Mohamed Muththalib Waleed
Drawn by : Mariyam Irasha Shareef
Services : Aishath Ahmed
Interior : -

Rev no	Date
--	------------
--	------------
--	------------
--	------------

RIYAN PRIVATE LIMITED
t : +9603315049 f : +9603310776
e : info@riyan.com.mv
w : www.riyan.com.mv
3rd floor, H. Azum, Ameeneemagu, Male'

Title: Structural Details - 1

Page: S-10/12

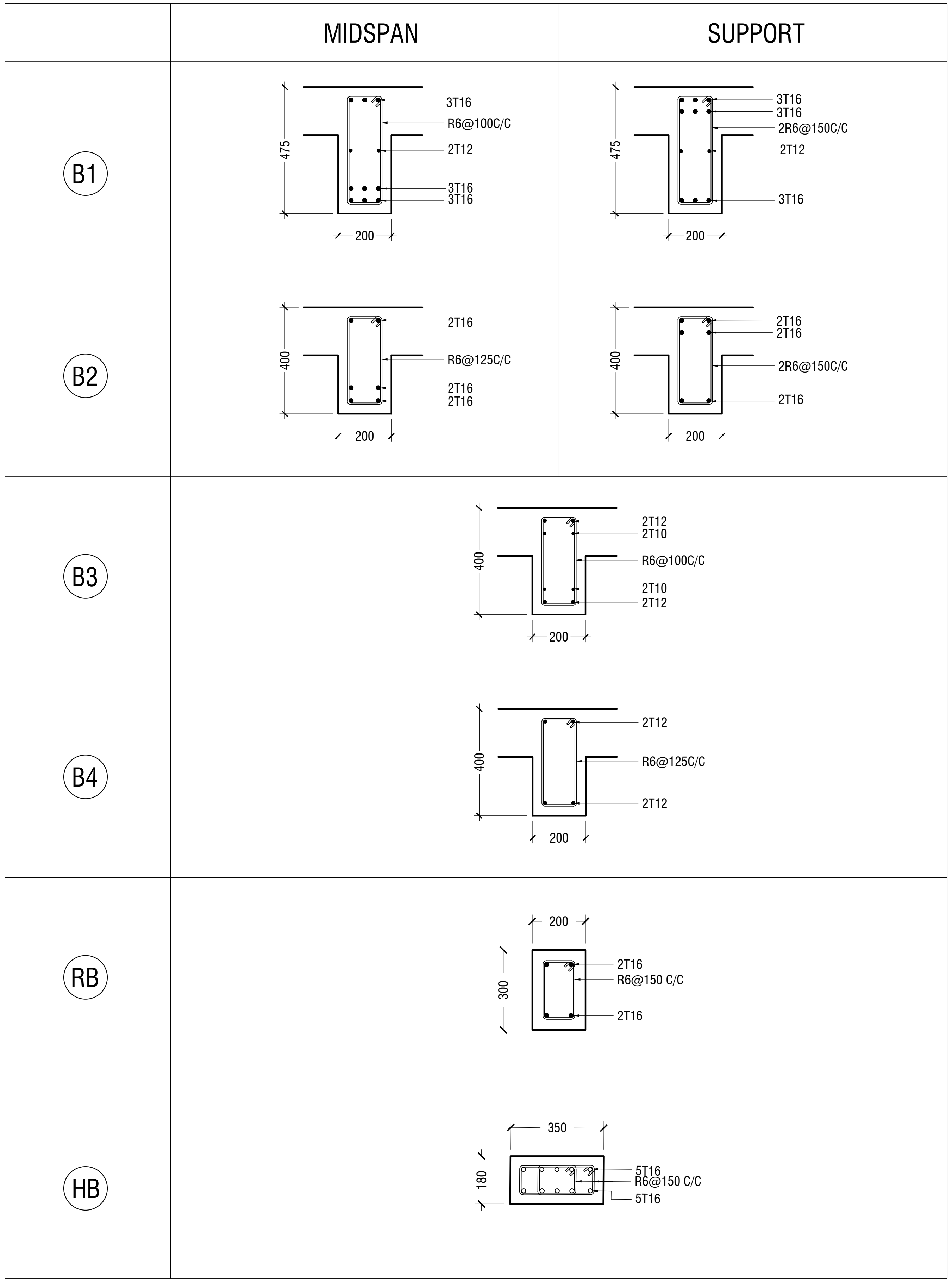
MIDSPAN
SUPPORT
B1
475
200
3T16
R6@100C/C
2T12
3T16
3T16
3T16
3T16
2R6@150C/C
2T12
3T16
B2
400
200
2T16
R6@125C/C
2T16
2T16
2T16
2T16
2R6@150C/C
2T16
B3
400
200
2T12
2T10
R6@100C/C
2T10
2T12
B4
400
200
2T12
R6@125C/C
2T12
RB
200
300
2T16
R6@150 C/C
2T16
HB
350
180
5T16
R6@150 C/C
5T16

BEAM DETAIL

NOTE:
PROVIDE 25MM SPACER BAR @ 2000 C/C BETWEEN TWO LAYERS
OF BEAM REINFORCEMENT

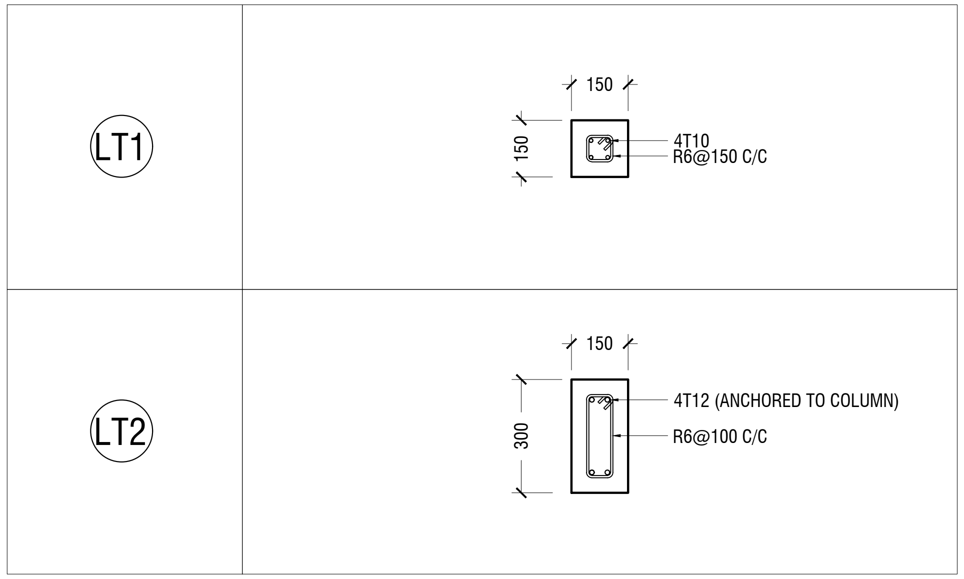
LT1
150
150
4T10
R6@150 C/C
LT2
150
300
4T12 (ANCHORED TO COLUMN)
R6@100 C/C

LINTELS OVER ALL DOORS, WINDOWS
(THAT DOES NOT RISE TO ROOF BEAM LEVEL)
LT2 FOR WINDOW (W2) ONLY

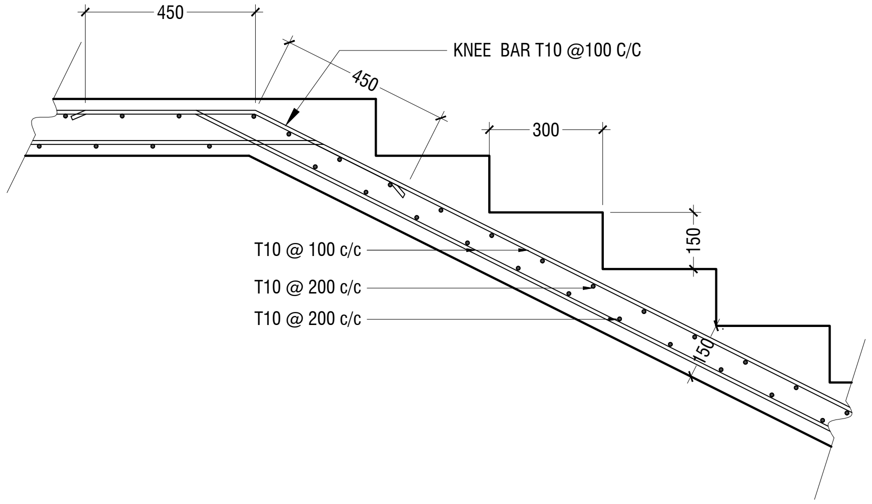
450
KNEE BAR T10 @100 C/C
450
300
150
T10 @ 100 c/c
T10 @ 200 c/c
T10 @ 200 c/c
150

MAIN STAIRCASE REINFORCEMENT DETAIL

STRUCTURAL DETAILS - 2

SCALE 1:20
0 0.1 0.2 0.4 0.6 0.8 1

Gdh.Hoandedhdhoo School 2 Classroom, ICT & Lab Block (2 story)
Client: Ministry of Education

Project Number: RI/2020/006
Date: March 2021
Architect : Mariyam Irasha Shareef
Engineer : Mohamed Muththalib Waleed
Drawn by : Mariyam Irasha Shareef
Services : Aishath Ahmed
Interior : -

Rev no	Date
--	-------------
--	-------------
--	-------------
--	-------------

RIYAN PRIVATE LIMITED

t : +9603315049 f : +9603310776
e : info@riyan.com.mv
w : www.riyan.com.mv
3rd floor, H. Azum, Ameeneemagu, Male'

Title: Structural Details - 2

Page: S-11/12

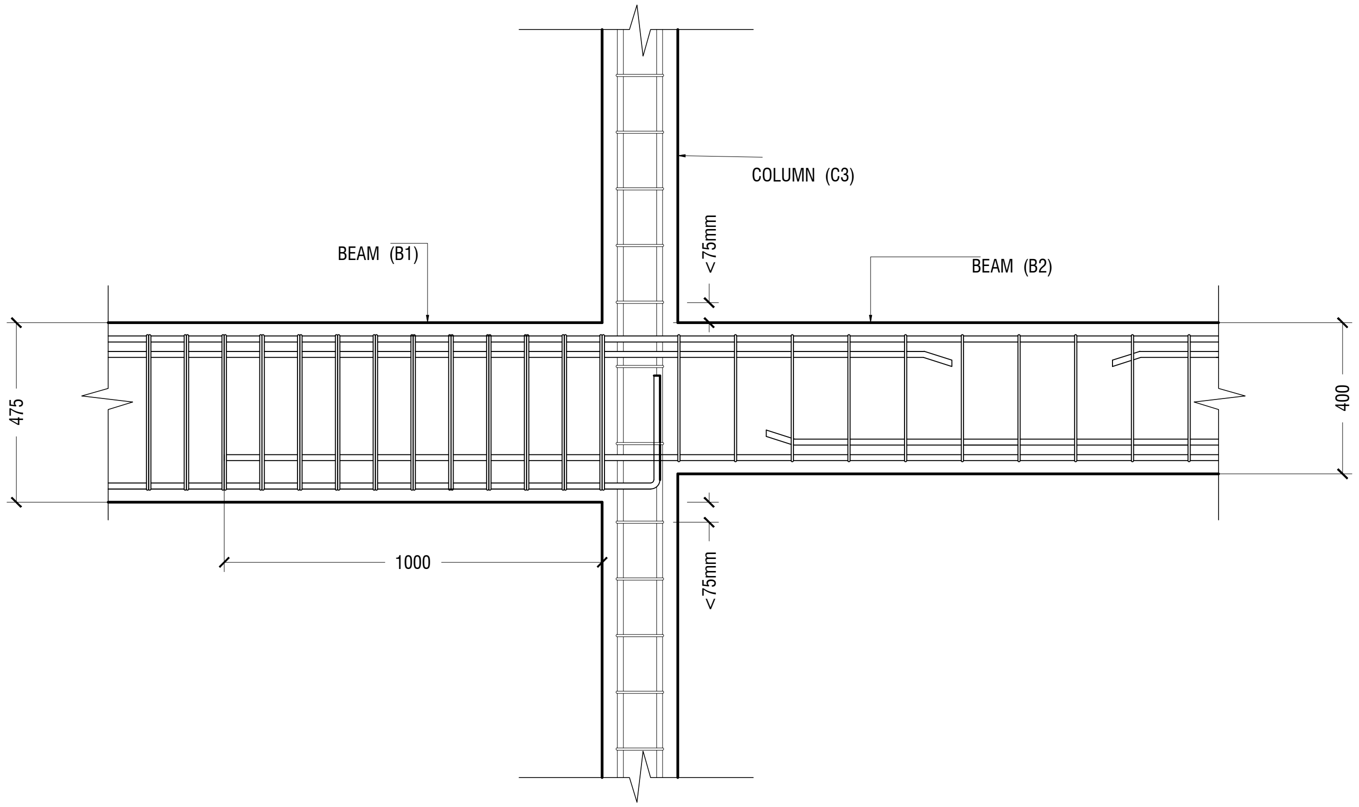
COLUMN (C3)
BEAM (B1)
BEAM (B2)
<75mm
<75mm
475
400
1000

B1 TO B2 CONNECTION DETAIL

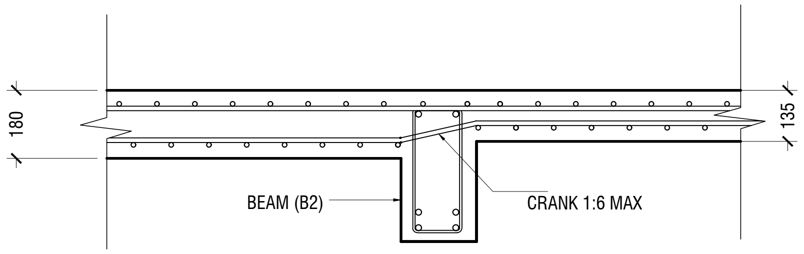
180
135
BEAM (B2)
CRANK 1:6 MAX

SLAB THICKNESS REDUCTION DETAIL

STRUCTURAL DETAILS - 3

SCALE 1:20

0 0.1 0.2 0.4 0.6 0.8 1

Gdh.Hoandedhdhoo School 2 Classroom, ICT & Lab Block (2 story)
Client: Ministry of Education

Project Number: RI/2020/006
Date: March 2021
Architect : Mariyam Irasha Shareef
Engineer : Mohamed Muththalib Waleed
Drawn by : Mariyam Irasha Shareef
Services : Aishath Ahmed
Interior : -

Rev no	Date
--	------------
--	------------
--	------------
--	------------

RIYAN PRIVATE LIMITED

t : +9603315049 f : +9603310776
e : info@riyan.com.mv
w : www.riyan.com.mv
3rd floor, H. Azum, Ameeneemagu, Male'

Title: Structural Details - 3

Page: S-12/12