CONSULTANCY SERVICES FOR SURVEY, DESIGN AND EIA WORKS OF WATER SUPPLY AND
SEWERAGE FACILITIES IN 6 ISLANDS, MALDIVES

PACKAGE 6

WATER SUPPLY SYSTEM OF L.KUNAHANDHOO, MALDIVES

For Ministry of National Planning, Housing and Infrastructure, Republic of Maldives

EPOCH
ASSOCIATES

T: +960 333 3528 E: info@epoch.associates W: wwww.epoch.associates
A: 4A, 4th Floor, M. Ahigasdhoshuge, Fareedhee Magu Male' Republic of Maldives

FEEDBACK INFRA
Making Infrastructure Happen

CONTENTS

OVERALL LAYOUT

Water Supply Network Layout	01
Water Supply Network Zone Layout	02
Water Supply Network - Zone 01	03
Water Supply Network - Zone 02	04
Water Supply Network - Zone 03	05
Water Supply Network - Zone 04	06
Water Supply Network - Zone 05	07
Water Supply Network - Zone 06	08
Water Supply Network - Zone 07	09
Water Supply Network - Zone 08	10
Water Supply Network - Zone 09	11
Rainwater Collection Network Layout	12
Rainwater Collection Network Zone Layout	13
Rainwater Collection Network - Zone 01	14
Rainwater Collection Network - Zone 02	15

DETAILED DRAWINGS FOR SPECIFIC COMPONENTS

WATER SUPPLY HOUSE AND COMMERCIAL/ INSTITUTION CONNECTIONS	W-(1)
VALVE CHAMBER DETAILS	W-(2)
THRUST BLOCK DETAILS	W-(3)
INTERNAL PIPE LAYOUT	W-(4)
IWRM PLANT P&I OVERVIEW	W-(5)
IWRM PLANT P&I DETAIL A	W-(6)
IWRM PLANT P&I DETAIL B	W-(7)
IWRM PLANT P&I DETAIL C	W-(8)
IWRM PLANT P&I DETAIL D	W-(9)
IWRM PLANT P&I DETAIL E	W-(10)
IWRM PLANT P&I DETAIL F	W-(11)
IWRM PLANT P&I DETAIL G	W-(12)
BOREHOLE DETAILS	W-(13)
BRINE TANK DETAILS	W-(14)
RAINWATER LIFT WELL DETAILS	W-(15)
PUMP SHED DETAILS	W-(16), W-(17)
PUMP SHED COLUMN AND BEAM DETAILS	W-(18)
TREATED WATER TANK DETAILS	W-(19)
RAINWATER HOLDING TANK DETAILS	W-(20)
BALLAST BLOCK DETAILS	W-(21)
DIFFUSER DETAILS	W-(22)
BRINE SEA OUTFALL DETAILS	W-(23)
RAINWATER FIRST FLUSH MECHANISM	W-(24)
INTERNAL NETWORK LAYOUT - SCHOOL	W-(25)
INTERNAL NETWORK LAYOUT - MOSQUE	W-(26)
INTERNAL NETWORK LAYOUT - HEALTH CENTER	W-(27)
INTERNAL NETWORK LAYOUT - MOSQUE	W-(28)
INTERNAL NETWORK LAYOUT - HUKURU MOSQUE	W-(29)
LIGHT POST	W-(30)

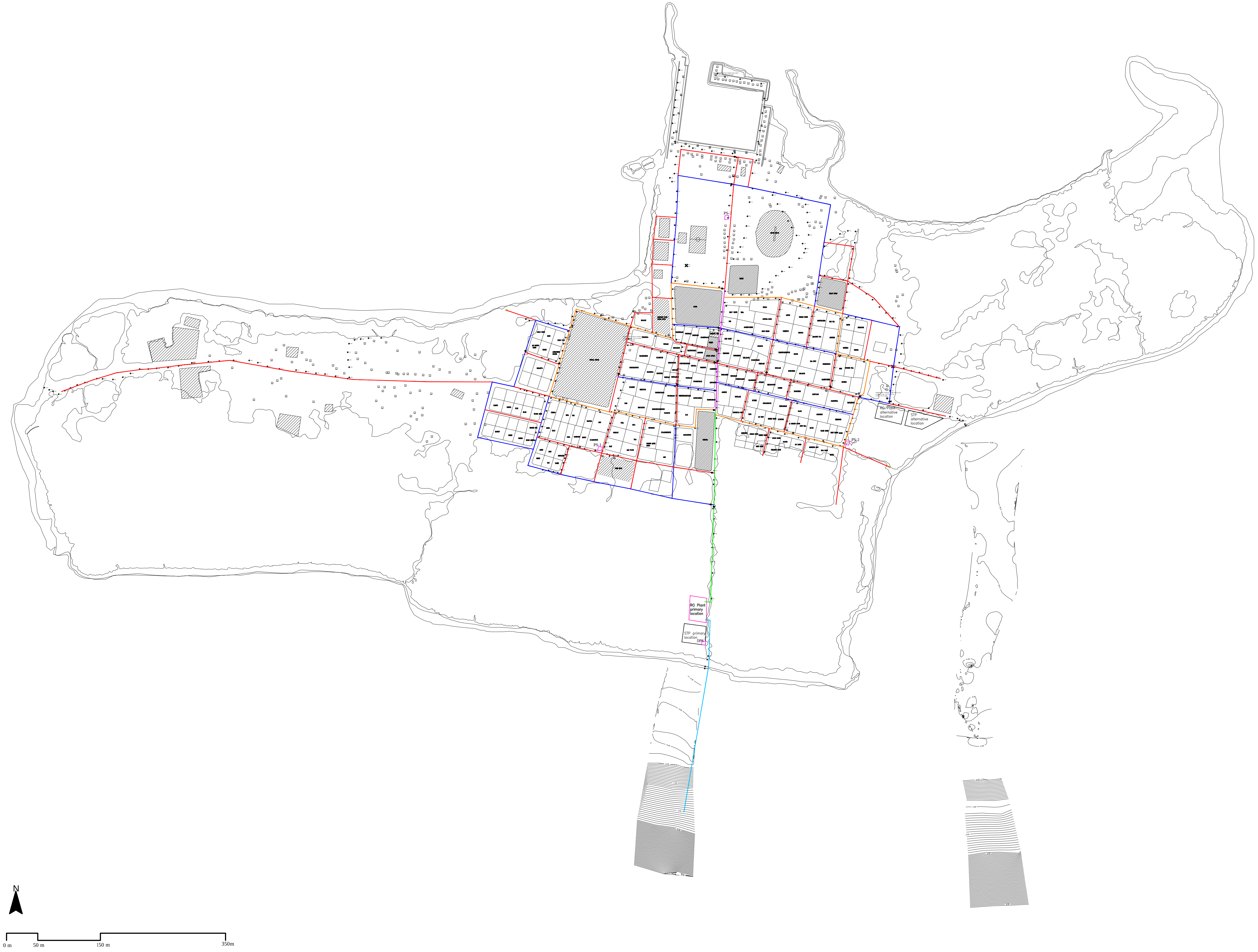

L. KUNAHANDHOO WATER SUPPLY LAYOUT

1:6000

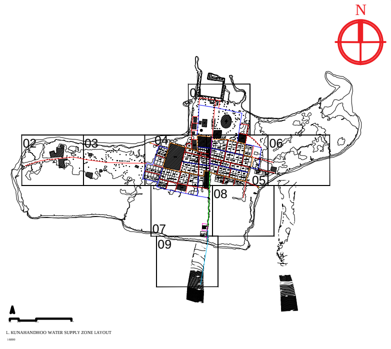

Legend

🟥	Ø63 HDPE Water Main Distribution Pipe	🟦	Ø75 HDPE Water Main Distribution Pipe
🟪	Ø90 HDPE Water Main Distribution Pipe	🟧	Ø110 HDPE Water Main Distribution Pipe
🟩	Ø160 HDPE Water Main Distribution Pipe	🟦	Ø110 HDPE Brine Outfall Pipe
⊗	Gate Valves	⋈	Washout Valves
●	Junction		

Notes:

1. All levels are shown in meters.
2. All levels are shown from mean sea level.
3. This drawing to be read in conjunction with all other relevant drawing and specifications.
4. All pressure pipes and fittings shall be installed using electro-fusion and butt-fusion technologies.
5. All pressure pipes shall be laid in between 0.7m - 1.0m below natural ground level to achieve best flat alignment based on topographic survey.
6. All the service connections to the mains shall be made using electro-fusion saddle and coupler.
7. Minimum size of the main water supply network shall be OD 63mm PE100, PN10, SDR17 HDPE pipe.
8. Minimum size of the house service line shall be OD 25mm PE100, PN16, SDR11 HDPE pipe.
9. Minimum size of commercial and other institutional connection service line shall be 50mm, PE100, PN16, SDR11 HDPE pipe.

MAINS DISTRIBUTION

DIAMETER (mm)	LENGTH HDPE (m)	TYPE OF PIPE
63	4301	HDPE (PE100,PN10,SDR17)
75	2426	
90	194	
110	1453	
160	316	
Total	8690	

Gate Valves - 20 nos
Washout Valves - 02 nos

OUTFALL

DIAMETER (mm)	LENGTH HDPE (m)	TYPE OF PIPE
110	-82m (on land) -236m (offshore)	HDPE (PE100,PN10,SDR11)

PSM BENCHMARKS

⊕	PERMANENT SURVEY MARK PSM_0099 318628.0850E, 197674.0730N 1.608m From MSL
⊕	PERMANENT SURVEY MARK PSM_0100 318485.463E, 197250.969N 0.370m From MSL
⊕	PERMANENT SURVEY MARK PSM_0101 318884.223E, 197157.653N 0.485m From MSL

R00	JUNE 2020	STAGE -1	PD	SBC	SD
REV. NO.	Date	Revision Description	Drawn	Chkd	Appd.

Title:

Consultancy Services for Survey, Design and EIA works of Water Supply and Sewerage Facilities in 5 islands, Maldives - Package 6

Sub Title:

Water Supply System in L. Kunahandhoo

Client:

Ministry of National Planning, Housing and Infrastructure, Republic of Maldives

EPOCH ASSOCIATES
T: +960 333 3528
E: info@epoch.associates
W: wwww.epoch.associates
A: G. Rosary West,
Husnuheenaa Magu, Male', Maldives

FEEDBACK INFRA
Making Infrastructure Happen

Drawn: F.I.A.
Checked: M.S.S.
Designed: F.I.A.
Approved: I.W.
Date: Aug 2020
SCALE (A3): 1:6000
Project No: EP-WS/2019/06
Rev: R-01
Page: 01

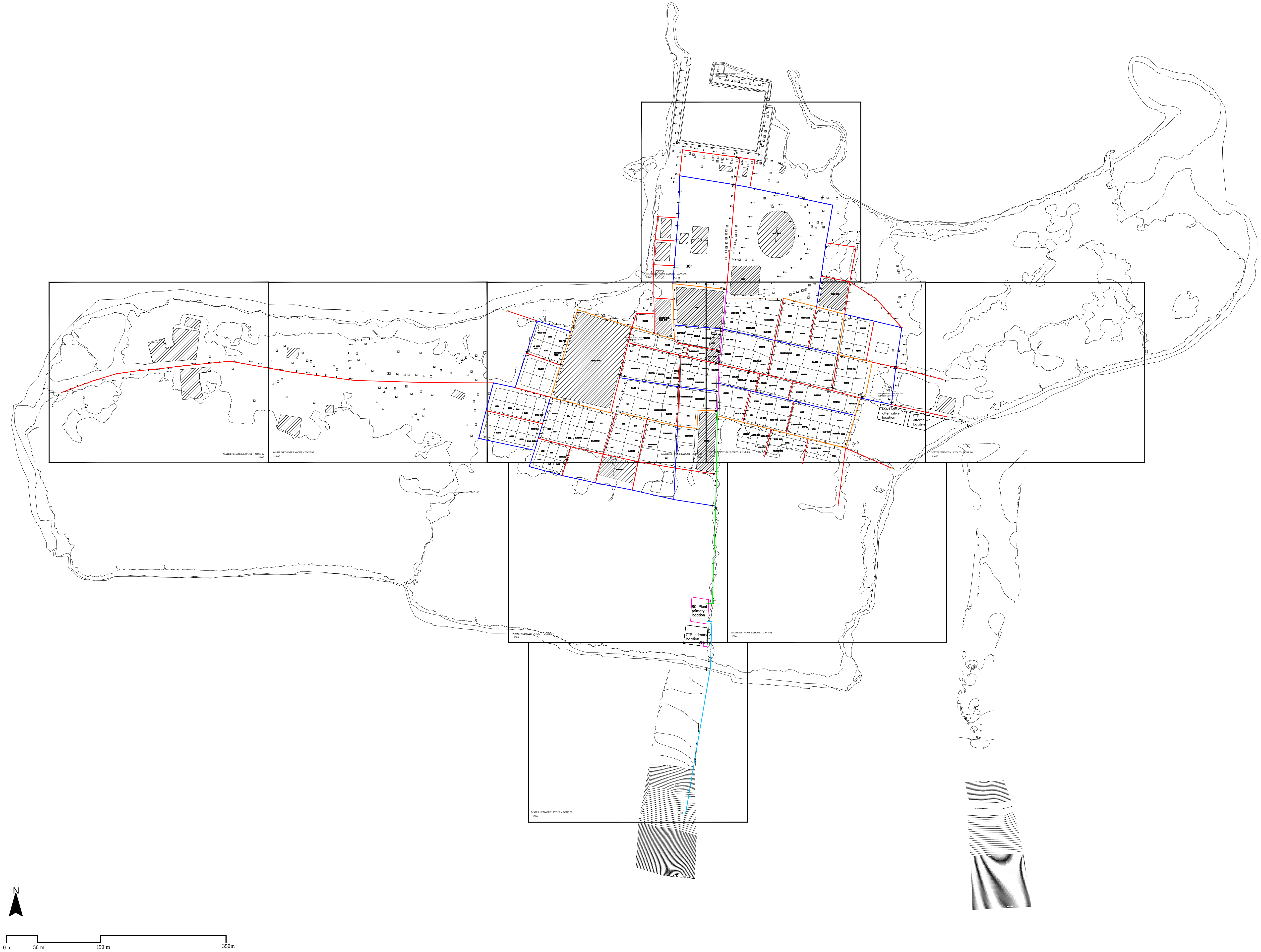
WATER NETWORK LAYOUT - ZONE 01
1:1000
WATER NETWORK LAYOUT - ZONE 02
1:1000
WATER NETWORK LAYOUT - ZONE 03
1:1000
WATER NETWORK LAYOUT - ZONE 06
1:1000
WATER NETWORK LAYOUT - ZONE 08
1:1000
WATER NETWORK LAYOUT - ZONE 09
1:1000
RO Plant alternative location
STP alternative location
RO Plant primary location
STP primary location
DPS
PERMANENT SURVEY MARK PSM_0101
N
0 m
50 m
150 m
350m

L. KUNAHANDHOO WATER SUPPLY ZONE LAYOUT

1:6000

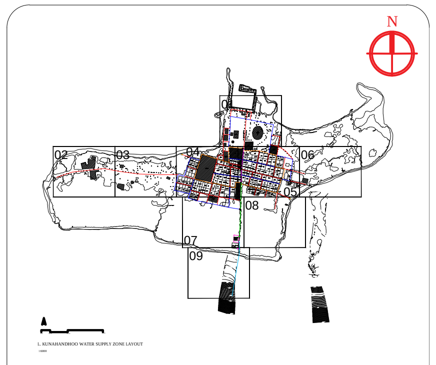
N
01
02
03
04
05
06
07
08
09
L. KUNAHANDHOO WATER SUPPLY ZONE LAYOUT

Legend

🟥	Ø63 HDPE Water Main Distribution Pipe	🟦	Ø75 HDPE Water Main Distribution Pipe
🟪	Ø90 HDPE Water Main Distribution Pipe	🟧	Ø110 HDPE Water Main Distribution Pipe
🟩	Ø160 HDPE Water Main Distribution Pipe	🟦	Ø110 HDPE Brine Outfall Pipe
⊗	Gate Valves	⧓	Washout Valves
●	Junction		

Notes:

1. All levels are shown in meters.
2. All levels are shown from mean sea level.
3. This drawing to be read in conjunction with all other relevant drawing and specifications.
4. All pressure pipes and fittings shall be installed using electro-fusion and butt-fusion technologies.
5. All pressure pipes shall be laid in between 0.7m - 1.0m below natural ground level to achieve best flat alignment based on topographic survey.
6. All the service connections to the mains shall be made using electro-fusion saddle and coupler.
7. Minimum size of the main water supply network shall be OD 63mm PE100, PN10, SDR17 HDPE pipe.
8. Minimum size of the house service line shall be OD 25mm PE100, PN16, SDR11 HDPE pipe.
9. Minimum size of commercial and other institutional connection service line shall be 50mm, PE100, PN16, SDR11 HDPE pipe.

MAINS DISTRIBUTION

DIAMETER (mm)	LENGTH HDPE (m)	TYPE OF PIPE
63	4301	HDPE (PE100,PN10,SDR17)
75	2426	
90	194	
110	1453	
160	316	
Total	8690	

Gate Valves - 20 nos
Washout Valves - 02 nos

OUTFALL

DIAMETER (mm)	LENGTH HDPE (m)	TYPE OF PIPE
110	-82m (on land) -236m (offshore)	HDPE (PE100,PN10,SDR11)

PSM BENCHMARKS

⊕ PERMANENT SURVEY MARK PSM_0099
318628.0850E, 197674.0730N
1.608m From MSL

⊕ PERMANENT SURVEY MARK PSM_0100
318485.463E, 197250.969N
0.370m From MSL

⊕ PERMANENT SURVEY MARK PSM_0101
318884.223E, 197157.653N
0.485m From MSL

REV. NO.	Date	Revision Description	Drawn	Chkd	Appd.
R00	JUNE 2020	STAGE -1	PD	SBC	SD

Title:
Consultancy Services for Survey, Design and EIA works of Water Supply and Sewerage Facilities in 5 islands, Maldives - Package 6

Sub Title:
Water Supply System in L. Kunahandhoo

Client:
Ministry of National Planning, Housing and Infrastructure, Republic of Maldives

EPOCH ASSOCIATES
T: +960 333 3528
E: info@epoch.associates
W: wwww.epoch.associates
A: G. Rosary West,
Husnuheenaa Magu, Male', Maldives

FEEDBACK INFRA
Making Infrastructure Happen

Drawn: F.I.A.	Checked: M.S.S.
Designed: F.I.A.	Approved: I.W.
Date: Aug 2020	SCALE (A3): 1:6000

Project No: EP-WS/2019/06

Rev: R-01

Page: 02

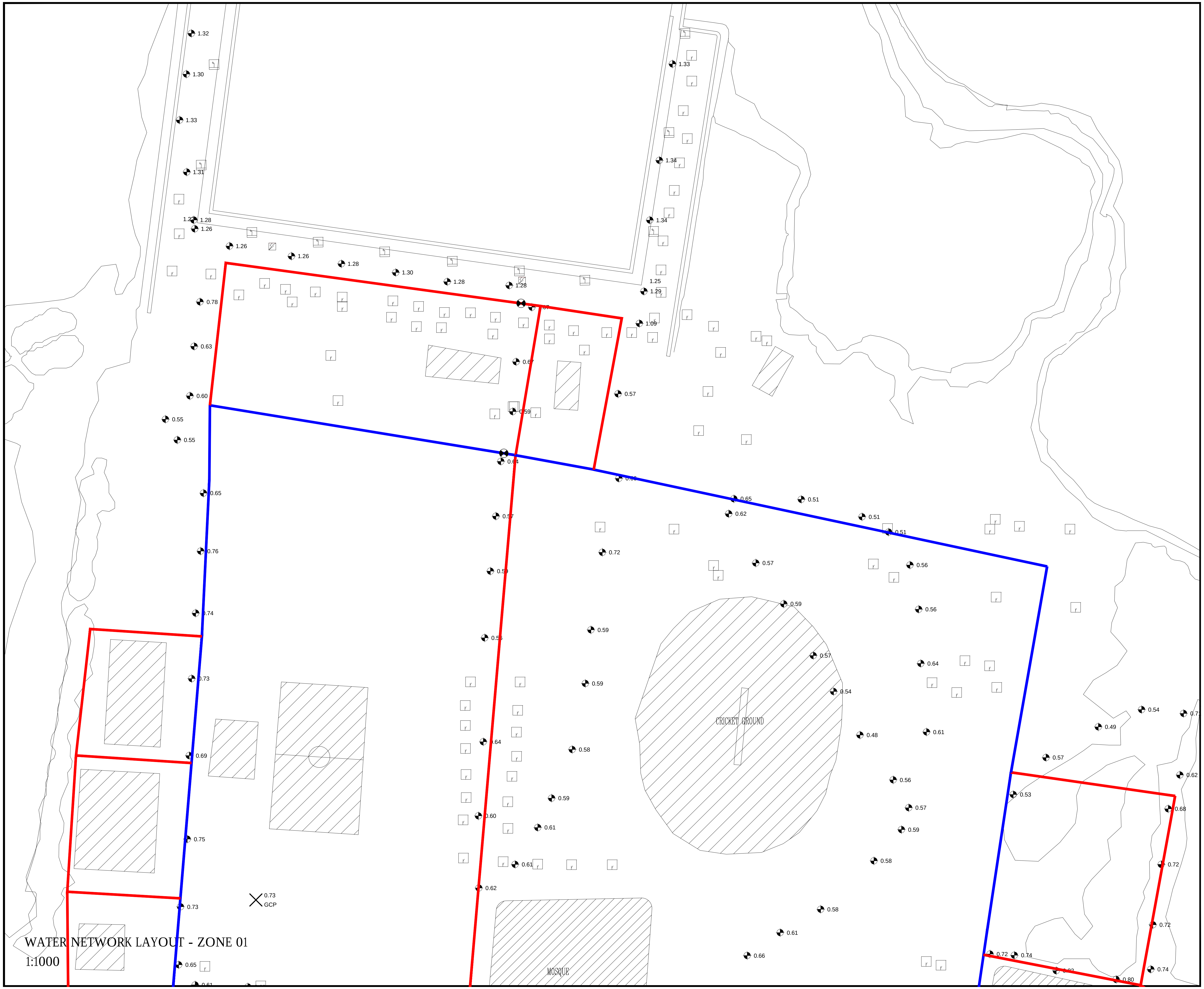

WATER NETWORK LAYOUT - ZONE 01

1:1000

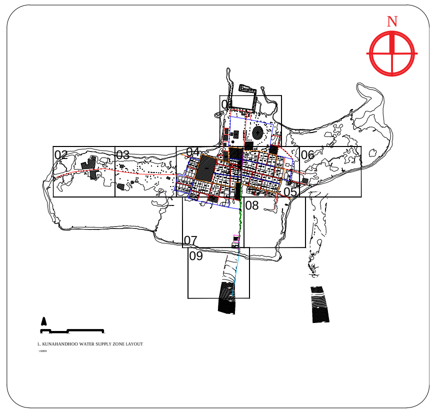

Legend

🟥	Ø63 HDPE Water Main Distribution Pipe	🟦	Ø75 HDPE Water Main Distribution Pipe
🟪	Ø90 HDPE Water Main Distribution Pipe	🟧	Ø110 HDPE Water Main Distribution Pipe
🟩	Ø160 HDPE Water Main Distribution Pipe	🟦	Ø110 HDPE Brine Outfall Pipe
⊗	Gate Valves	⧓	Washout Valves
●	Junction		

Notes:
1. All levels are shown in meters.
2. All levels are shown from mean sea level.
3. This drawing to be read in conjunction with all other relevant drawing and specifications.
4. All pressure pipes and fittings shall be installed using electro-fusion and butt-fusion technologies.
5. All pressure pipes shall be laid in between 0.7m - 1.0m below natural ground level to achieve best flat alignment based on topographic survey.
6. All the service connections to the mains shall be made using electro-fusion saddle and coupler.
7. Minimum size of the main water supply network shall be OD 63mm PE100, PN10, SDR17 HDPE pipe.
8. Minimum size of the house service line shall be OD 25mm PE100, PN16, SDR11 HDPE pipe.
9. Minimum size of commercial and other institutional connection service line shall be 50mm, PE100, PN16, SDR11 HDPE pipe.

MAINS DISTRIBUTION

DIAMETER (mm)	LENGTH HDPE (m)	TYPE OF PIPE
63	4301	HDPE (PE100,PN10,SDR17)
75	2426	
90	194	
110	1453	
160	316	
Total	8690	

Gate Valves - 20 nos
Washout Valves - 02 nos

OUTFALL

DIAMETER (mm)	LENGTH HDPE (m)	TYPE OF PIPE
110	-82m (on land) -236m (offshore)	HDPE (PE100,PN10,SDR11)

PSM BENCHMARKS

PERMANENT SURVEY MARK PSM_0099
318628.0850E, 197674.0730N
1.608m From MSL

PERMANENT SURVEY MARK PSM_0100
318485.463E, 197250.969N
0.370m From MSL

PERMANENT SURVEY MARK PSM_0101
318884.223E, 197157.653N
0.485m From MSL

REV. NO.	Date	Revision Description	Drawn	Chkd	Appd.
R00	JUNE 2020	STAGE -1	PD	SBC	SD

Title:
Consultancy Services for Survey, Design and EIA works of Water Supply and Sewerage Facilities in 5 islands, Maldives - Package 6

Sub Title:
Water Supply System in L. Kunahandhoo

Client:
Ministry of National Planning, Housing and Infrastructure, Republic of Maldives

EPOCH ASSOCIATES
T: +960 333 3528
E: info@epoch.associates
W: wwww.epoch.associates
A: G. Rosary West,
Husnuheenaa Magu, Male', Maldives

FEEDBACK INFRA
Making Infrastructure Happen

Drawn: F.I.A.
Checked: M.S.S.
Designed: F.I.A.
Approved: I.W.
Date: Aug 2020
SCALE (A3): 1:1000
Project No: EP-WS/2019/06
Rev: R-01
Page: 03

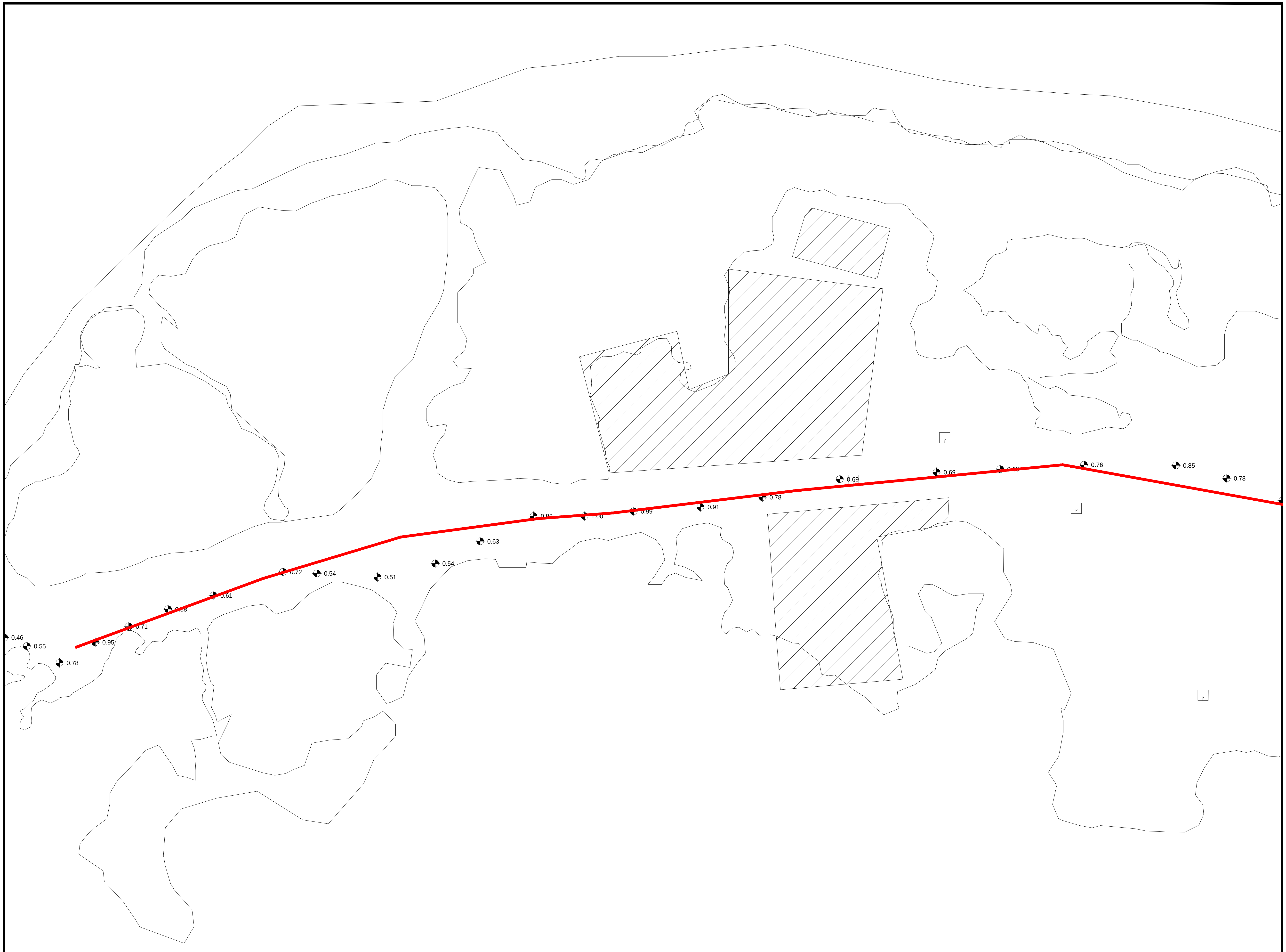

WATER NETWORK LAYOUT - ZONE 02

1:1000

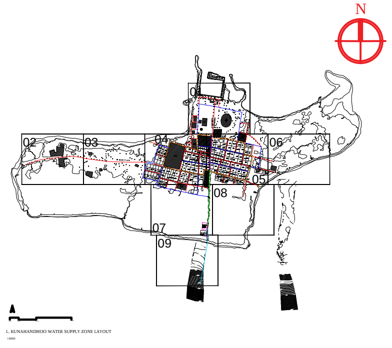

Legend

🟥	Ø63 HDPE Water Main Distribution Pipe	🟦	Ø75 HDPE Water Main Distribution Pipe
🟪	Ø90 HDPE Water Main Distribution Pipe	🟧	Ø110 HDPE Water Main Distribution Pipe
🟩	Ø160 HDPE Water Main Distribution Pipe	🟦	Ø110 HDPE Brine Outfall Pipe
⊗	Gate Valves	⧓	Washout Valves
●	Junction		

Notes:
1. All levels are shown in meters.
2. All levels are shown from mean sea level.
3. This drawing to be read in conjunction with all other relevant drawing and specifications.
4. All pressure pipes and fittings shall be installed using electro-fusion and butt-fusion technologies.
5. All pressure pipes shall be laid in between 0.7m - 1.0m below natural ground level to achieve best flat alignment based on topographic survey.
6. All the service connections to the mains shall be made using electro-fusion saddle and coupler.
7. Minimum size of the main water supply network shall be OD 63mm PE100, PN10, SDR17 HDPE pipe.
8. Minimum size of the house service line shall be OD 25mm PE100, PN16, SDR11 HDPE pipe.
9. Minimum size of commercial and other institutional connection service line shall be 50mm, PE100, PN16, SDR11 HDPE pipe.

MAINS DISTRIBUTION

DIAMETER (mm)	LENGTH HDPE (m)	TYPE OF PIPE
63	4301	HDPE (PE100,PN10,SDR17)
75	2426	
90	194	
110	1453	
160	316	
Total	8690	

Gate Valves - 20 nos
Washout Valves - 02 nos

OUTFALL

DIAMETER (mm)	LENGTH HDPE (m)	TYPE OF PIPE
110	-82m (on land) -236m (offshore)	HDPE (PE100,PN10,SDR11)

PSM BENCHMARKS

⊕ PERMANENT SURVEY MARK PSM_0099
318628.0850E, 197674.0730N
1.608m From MSL

⊕ PERMANENT SURVEY MARK PSM_0100
318485.463E, 197250.969N
0.370m From MSL

⊕ PERMANENT SURVEY MARK PSM_0101
318884.223E, 197157.653N
0.485m From MSL

R00	JUNE 2020	STAGE -1	PD	SBC	SD
REV. NO.	Date	Revision Description	Drawn	Chkd	Appd.

Title:
Consultancy Services for Survey, Design and EIA works of Water Supply and Sewerage Facilities in 5 islands, Maldives - Package 6

Sub Title:
Water Supply System in L. Kunahandhoo

Client:
Ministry of National Planning, Housing and Infrastructure, Republic of Maldives

EPOCH ASSOCIATES
T: +960 333 3528
E: info@epoch.associates
W: wwww.epoch.associates
A: G. Rosary West,
Husnuheenaa Magu, Male', Maldives

FEEDBACK INFRA
Making Infrastructure Happen

Drawn:	F.I.A.	Checked:	M.S.S.
Designed:	F.I.A.	Approved:	I.W.
Date:	Aug 2020	SCALE (A3):	1:1000

Project No: EP-WS/2019/06

Rev: R-01

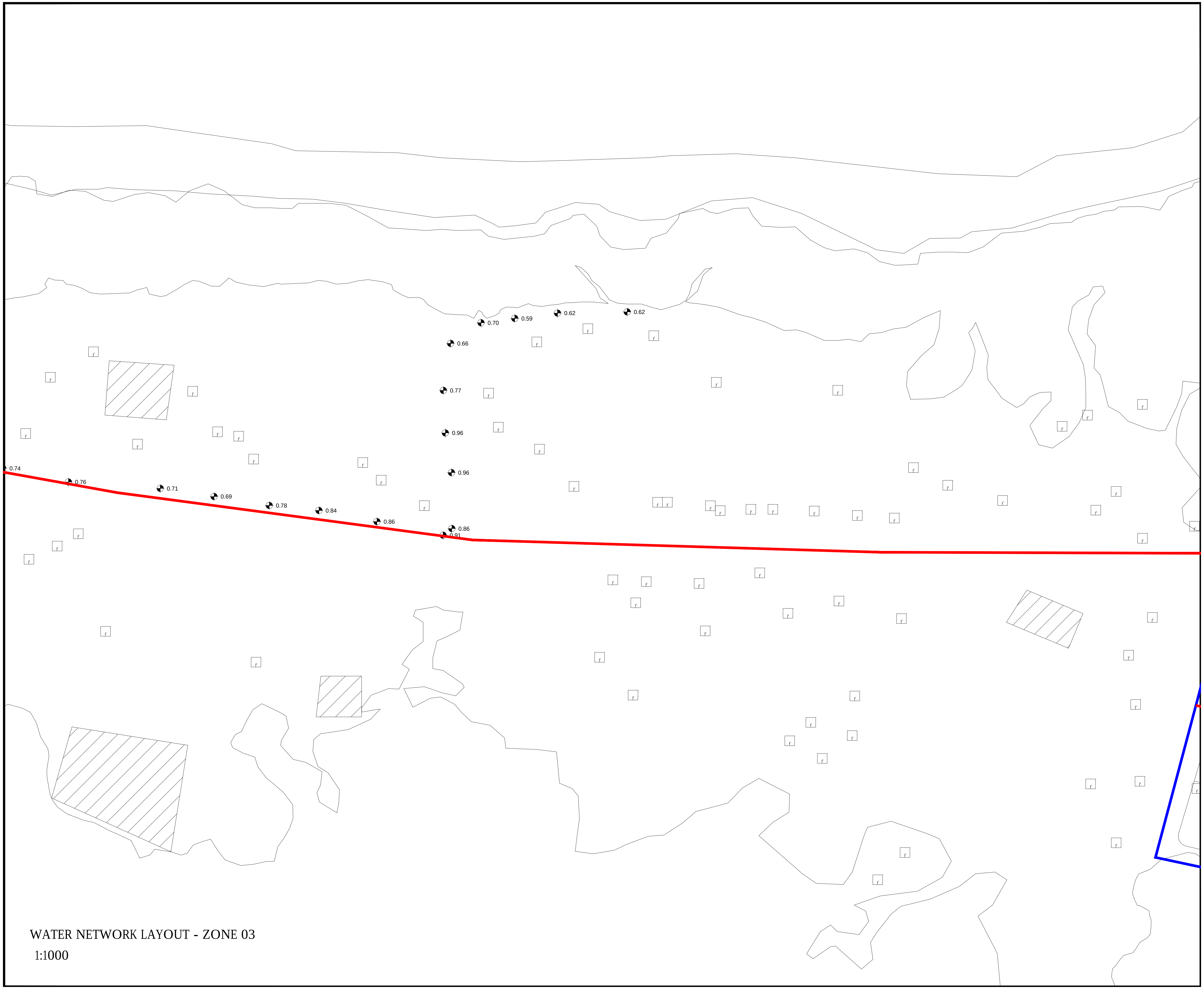

WATER NETWORK LAYOUT - ZONE 03

1:1000

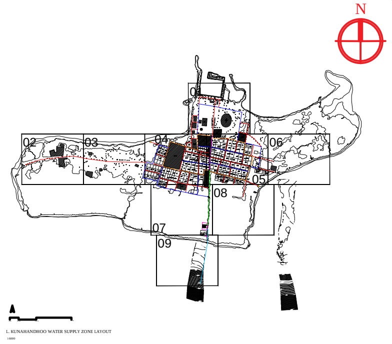

L. KUNAHANDHOO WATER SUPPLY ZONE LAYOUT

1:6000

Legend

🟥	Ø63 HDPE Water Main Distribution Pipe	🟦	Ø75 HDPE Water Main Distribution Pipe
🟪	Ø90 HDPE Water Main Distribution Pipe	🟧	Ø110 HDPE Water Main Distribution Pipe
🟩	Ø160 HDPE Water Main Distribution Pipe	🟦	Ø110 HDPE Brine Outfall Pipe
⊗	Gate Valves	⋈	Washout Valves
●	Junction		

Notes:

1. All levels are shown in meters.
2. All levels are shown from mean sea level.
3. This drawing to be read in conjunction with all other relevant drawing and specifications.
4. All pressure pipes and fittings shall be installed using electro-fusion and butt-fusion technologies.
5. All pressure pipes shall be laid in between 0.7m - 1.0m below natural ground level to achieve best flat alignment based on topographic survey.
6. All the service connections to the mains shall be made using electro-fusion saddle and coupler.
7. Minimum size of the main water supply network shall be OD 63mm PE100, PN10, SDR17 HDPE pipe.
8. Minimum size of the house service line shall be OD 25mm PE100, PN16, SDR11 HDPE pipe.
9. Minimum size of commercial and other institutional connection service line shall be 50mm, PE100, PN16, SDR11 HDPE pipe.

MAINS DISTRIBUTION

DIAMETER (mm)	LENGTH HDPE (m)	TYPE OF PIPE
63	4301	HDPE (PE100,PN10,SDR17)
75	2426	
90	194	
110	1453	
160	316	
Total	8690	

Gate Valves - 20 nos
Washout Valves - 02 nos

OUTFALL

DIAMETER (mm)	LENGTH HDPE (m)	TYPE OF PIPE
110	-82m (on land) -236m (offshore)	HDPE (PE100,PN10,SDR11)

PSM BENCHMARKS

PERMANENT SURVEY MARK PSM_0099
318628.0850E, 197674.0730N
1.608m From MSL

PERMANENT SURVEY MARK PSM_0100
318485.463E, 197250.969N
0.370m From MSL

PERMANENT SURVEY MARK PSM_0101
318884.223E, 197157.653N
0.485m From MSL

R00	JUNE 2020	STAGE -1	PD	SBC	SD
REV. NO.	Date	Revision Description	Drawn	Chkd	Appd.

Title:

Consultancy Services for Survey, Design and EIA works of Water Supply and Sewerage Facilities in 5 islands, Maldives - Package 6

Sub Title:

Water Supply System in L. Kunahandhoo

Client:

Ministry of National Planning, Housing and Infrastructure, Republic of Maldives

EPOCH ASSOCIATES
T: +960 333 3528
E: info@epoch.associates
W: wwww.epoch.associates
A: G. Rosary West,
Husnuheenaa Magu, Male', Maldives

FEEDBACK INFRA
Making Infrastructure Happen

Drawn:	F.I.A.	Checked:	M.S.S.
Designed:	F.I.A.	Approved:	I.W.
Date:	Aug 2020	SCALE (A3):	1:1000

Project No: EP-WS/2019/06

Rev: R-01

Page: 05

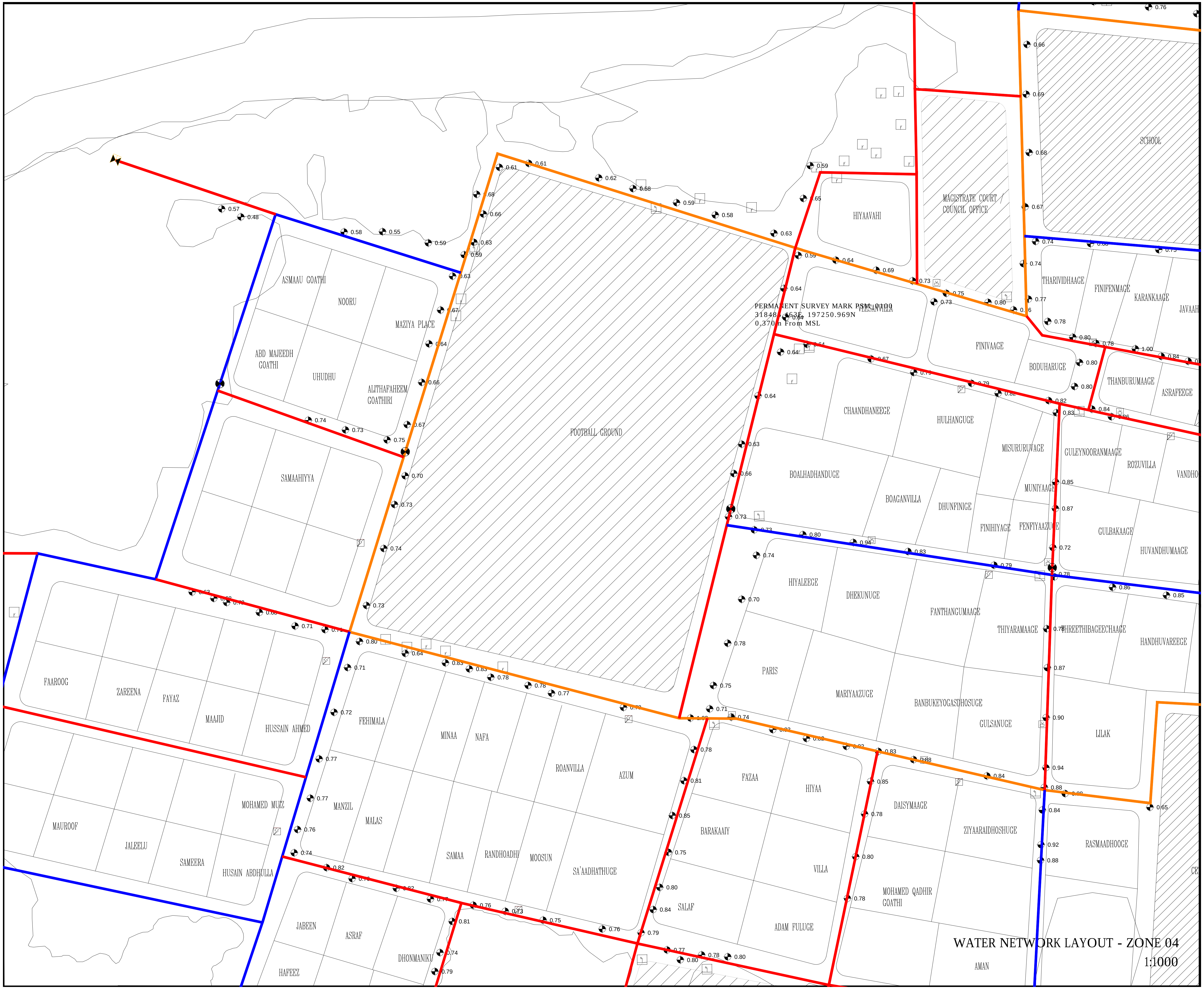
SCHOOL
MAGISTRATE COURT
COUNCIL OFFICE
HIYAAVAHI
PERMANENT SURVEY MARK PSM_0100
318485.463E, 197250.969N
0.370m From MSL
VILLANVILLA
FINIVAAGE
BODUHARAGE
THARIVIDHAAGE
FINIFENMAGE
KARANKAAGE
JAVAAH
THANBURUMAAGE
ASRAFEEGE
ASMAAU GOATHI
NOORU
MAZIYA PLACE
ABD MAJEEDH GOATHI
UHUDHU
ALITHAFAHEEM GOATHIRI
SAMAAHIYYA
FOOTBALL GROUND
CHAANDHANEEGE
HULHANGUGE
MISURURUVAAGE
GULEYNOORANMAAGE
ROZUVILLA
VANDHO
BOALHADHANDUGE
BOAGANVILLA
DHUNFINIGE
MUNIYAAGE
FINIHIYAGE
FENFIYAAZUGE
GULBAKAAGE
HUVANDHUMAAGE
HIYALEEGE
DHEKUNUGE
FANTHANGUMAAGE
THIYARAMAAGE
THREETHIBAGEECHAAGE
HANDHUVAREEGE
PARIS
MARIYAAZUGE
BANBUKEYOGASDHOSUGE
GULSANUGE
LILAK
FAAROOG
ZAREENA
FAYAZ
MAAJID
HUSSAIN AHMED
FEHIMALA
MINAA
NAFA
ROANVILLA
AZUM
FAZAA
HIYAA
DAISYMAAGE
ZIYAARAIDHOSHUGE
RASMAADHOOGE
MAUROOF
JALEELU
SAMEERA
MOHAMED MUIZ
HUSAIN ABDHULLA
MANZIL
MALAS
SAMAA
RANDHOADHI
MOOSUN
SA'AADHATHUGE
BARAKAAIY
VILLA
SALAF
ADAM FULUGE
MOHAMED QADHIR GOATHI
AMAN
JABEEN
ASRAF
DHONMANIKU
HAFEEZ
CE

WATER NETWORK LAYOUT - ZONE 04

1:1000

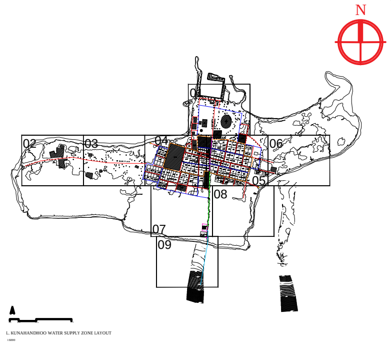
N
01
02
03
04
05
06
07
08
09

Legend

- 🟥 Ø63 HDPE Water Main Distribution Pipe
- 🟦 Ø75 HDPE Water Main Distribution Pipe
- 🟪 Ø90 HDPE Water Main Distribution Pipe
- 🟧 Ø110 HDPE Water Main Distribution Pipe
- 🟩 Ø160 HDPE Water Main Distribution Pipe
- ▬ Ø110 HDPE Brine Outfall Pipe
- ⊗ Gate Valves
- ⋈ Washout Valves
- ● Junction

Notes:
1. All levels are shown in meters.
2. All levels are shown from mean sea level.
3. This drawing to be read in conjunction with all other relevant drawing and specifications.
4. All pressure pipes and fittings shall be installed using electro-fusion and butt-fusion technologies.
5. All pressure pipes shall be laid in between 0.7m - 1.0m below natural ground level to achieve best flat alignment based on topographic survey.
6. All the service connections to the mains shall be made using electro-fusion saddle and coupler.
7. Minimum size of the main water supply network shall be OD 63mm PE100, PN10, SDR17 HDPE pipe.
8. Minimum size of the house service line shall be OD 25mm PE100, PN16, SDR11 HDPE pipe.
9. Minimum size of commercial and other institutional connection service line shall be 50mm, PE100, PN16, SDR11 HDPE pipe.

MAINS DISTRIBUTION

DIAMETER (mm)	LENGTH HDPE (m)	TYPE OF PIPE
63	4301	HDPE (PE100,PN10,SDR17)
75	2426	
90	194	
110	1453	
160	316	
Total	8690	

Gate Valves - 20 nos
Washout Valves - 02 nos

OUTFALL

DIAMETER (mm)	LENGTH HDPE (m)	TYPE OF PIPE
110	-82m (on land) -236m (offshore)	HDPE (PE100,PN10,SDR11)

PSM BENCHMARKS

PERMANENT SURVEY MARK PSM_0099
318628.0850E, 197674.0730N
1.608m From MSL

PERMANENT SURVEY MARK PSM_0100
318485.463E, 197250.969N
0.370m From MSL

PERMANENT SURVEY MARK PSM_0101
318884.223E, 197157.653N
0.485m From MSL

REV. NO.	Date	Revision Description	Drawn	Chkd	Appd.
R00	JUNE 2020	STAGE -1	PD	SBC	SD

Title:
Consultancy Services for Survey, Design and EIA works of Water Supply and Sewerage Facilities in 5 islands, Maldives - Package 6

Sub Title:
Water Supply System in L. Kunahandhoo

Client:
Ministry of National Planning, Housing and Infrastructure, Republic of Maldives

EPOCH ASSOCIATES
T: +960 333 3528
E: info@epoch.associates
W: wwww.epoch.associates
A: G. Rosary West,
Husnuheenaa Magu, Male', Maldives

FEEDBACK INFRA
Making Infrastructure Happen

Drawn: F.I.A.
Checked: M.S.S.
Designed: F.I.A.
Approved: I.W.
Date: Aug 2020
SCALE (A3): 1:1000
Project No: EP-WS/2019/06
Rev: R-01
Page: 06

WATER NETWORK LAYOUT - ZONE 05

1:1000

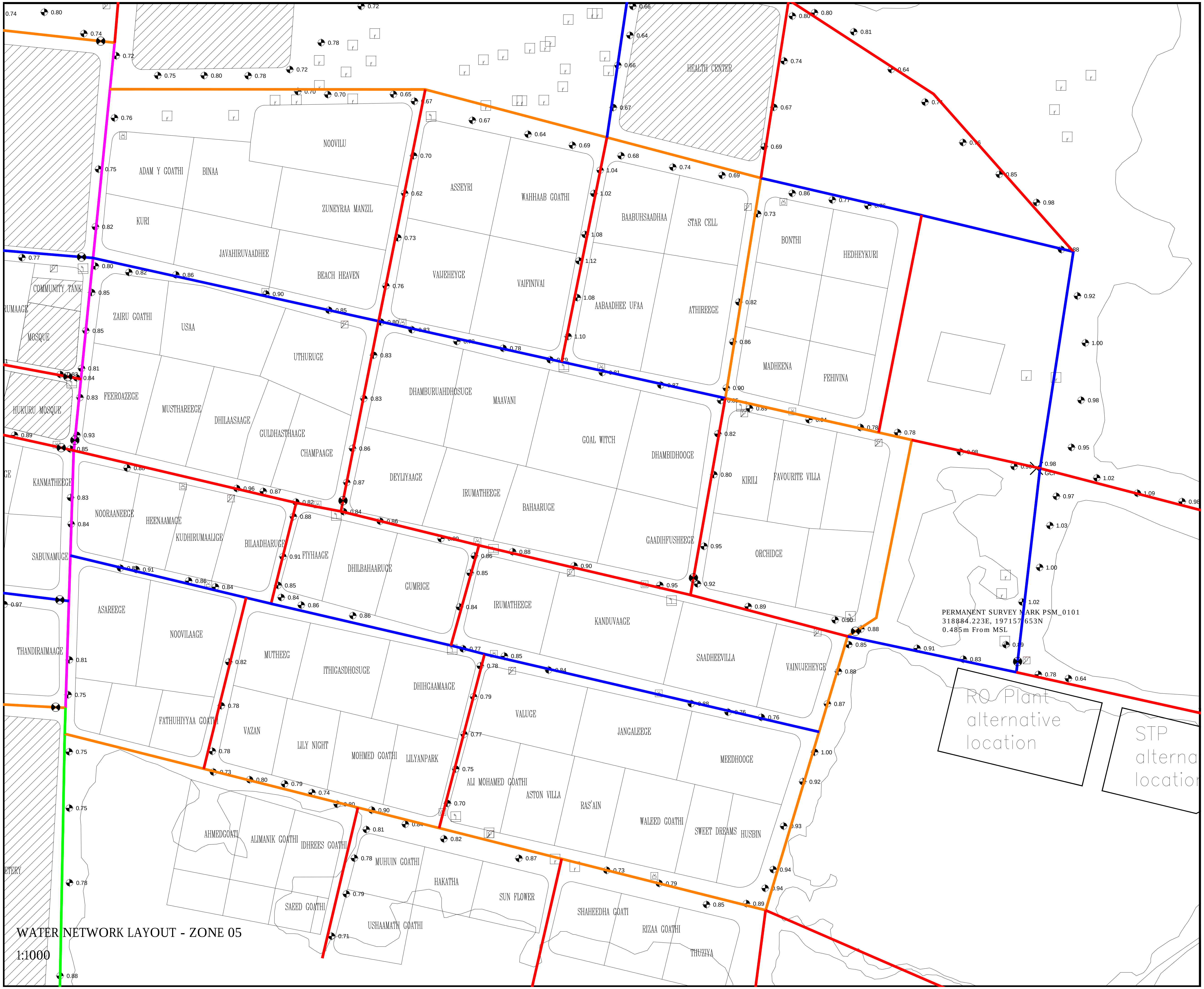
NOOVILU
ADAM Y GOATHI
BINAA
ZUNEYRAA MANZIL
KURI
JAVAHIRUVAADHEE
BEACH HEAVEN
ASSEYRI
WAHHAAB GOATHI
VAIJEHEYGE
VAIFINIVAI
BAABUHSAADHAA
STAR CELL
AABAADHEE UFAA
ATHIREEGE
HEALTH CENTER
BONTHI
HEDHEYKURI
MADHEENA
FEHIVINA
COMMUNITY TANK
MOSQUE
HUKURU MOSQUE
ZAIRU GOATHI
USAA
UTHURUGE
FEEROAZEEGE
MUSTHAREEGE
DHILAASAAGE
GULDHASTHAAGE
CHAMPAAGE
DHAMBURUAHDHOSUGE
MAAVANI
DEYLIYAAGE
IRUMATHEEGE
BAHAARUGE
GOAL WITCH
DHAMBIDHOOGE
GAADHIFUSHEEGE
KIRILI
FAVOURITE VILLA
ORCHIDGE
KANMATHEEGE
NOORAANEEGE
HEENAAMAGE
KUDHIRUMAALIGE
BILAADHARUGE
FIYHAAGE
DHILBAHAARUGE
GUMRIGE
SABUNAMUGE
IRUMATHEEGE
KANDUVAAGE
SAADHEEVILLA
VAINUJEHEYGE
ASAREEGE
NOOVILAAGE
MUTHEEG
ITHIGASDHOSUGE
DHIHGAAMAAGE
THANDIRAIMAAGE
VALUGE
JANGALEEGE
MEEDHOOGE
FATHUHIYYAA GOATHI
VAZAN
LILY NIGHT
MOHMED GOATHI
LILYANPARK
ALI MOHAMED GOATHI
ASTON VILLA
RAS'AIN
WALEED GOATHI
SWEET DREAMS
HUSBIN
AHMEDGOATHI
ALIMANIK GOATHI
IDHREES GOATHI
MUHUIN GOATHI
HAKATHA
SUN FLOWER
SAEED GOATHI
USHAAMATH GOATHI
SHAHEEDHA GOATI
RIZAA GOATHI
THUZIYA
RUMAAGE
ETERY
PERMANENT SURVEY MARK PSM_0101
318884.223E, 197157.653N
0.485m From MSL
RO Plant
alternative
location
STP
alterna
location
GCP

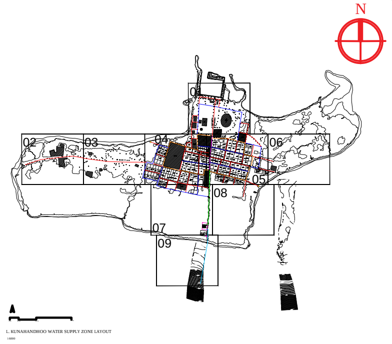
N
02
03
06
07
08
09
L. KUNAHANDHOO WATER SUPPLY ZONE LAYOUT
1:6000

Legend

- 🟥 Ø63 HDPE Water Main Distribution Pipe
- 🟪 Ø90 HDPE Water Main Distribution Pipe
- 🟩 Ø160 HDPE Water Main Distribution Pipe
- 🟦 Ø75 HDPE Water Main Distribution Pipe
- 🟧 Ø110 HDPE Water Main Distribution Pipe
- 🟦 Ø110 HDPE Brine Outfall Pipe
- ⊗ Gate Valves
- ⋈ Washout Valves
- ● Junction

Notes:
1. All levels are shown in meters.
2. All levels are shown from mean sea level.
3. This drawing to be read in conjunction with all other relevant drawing and specifications.
4. All pressure pipes and fittings shall be installed using electro-fusion and butt-fusion technologies.
5. All pressure pipes shall be laid in between 0.7m - 1.0m below natural ground level to achieve best flat alignment based on topographic survey.
6. All the service connections to the mains shall be made using electro-fusion saddle and coupler.
7. Minimum size of the main water supply network shall be OD 63mm PE100, PN10, SDR17 HDPE pipe.
8. Minimum size of the house service line shall be OD 25mm PE100, PN16, SDR11 HDPE pipe.
9. Minimum size of commercial and other institutional connection service line shall be 50mm, PE100, PN16, SDR11 HDPE pipe.

MAINS DISTRIBUTION

DIAMETER (mm)	LENGTH HDPE (m)	TYPE OF PIPE
63	4301	HDPE (PE100,PN10,SDR17)
75	2426	
90	194	
110	1453	
160	316	
Total	8690	

Gate Valves - 20 nos
Washout Valves - 02 nos

OUTFALL

DIAMETER (mm)	LENGTH HDPE (m)	TYPE OF PIPE
110	-82m (on land) -236m (offshore)	HDPE (PE100,PN10,SDR11)

PSM BENCHMARKS

PERMANENT SURVEY MARK PSM_0099
318628.0850E, 197674.0730N
1.608m From MSL

PERMANENT SURVEY MARK PSM_0100
318485.463E, 197250.969N
0.370m From MSL

PERMANENT SURVEY MARK PSM_0101
318884.223E, 197157.653N
0.485m From MSL

REV. NO.	Date	Revision Description	Drawn	Chkd	Appd.
R00	JUNE 2020	STAGE -1	PD	SBC	SD

Title:
Consultancy Services for Survey, Design and EIA works of Water Supply and Sewerage Facilities in 5 islands, Maldives - Package 6

Sub Title:
Water Supply System in L. Kunahandhoo

Client:
Ministry of National Planning, Housing and Infrastructure, Republic of Maldives

EPOCH ASSOCIATES
T: +960 333 3528
E: info@epoch.associates
W: wwww.epoch.associates
A: G. Rosary West,
Husnuheenaa Magu, Male', Maldives

FEEDBACK INFRA
Making Infrastructure Happen

Drawn: F.I.A.
Checked: M.S.S.
Designed: F.I.A.
Approved: I.W.
Date: Aug 2020
SCALE (A3): 1:1000
Project No: EP-WS/2019/06
Rev: R-01
Page: 07

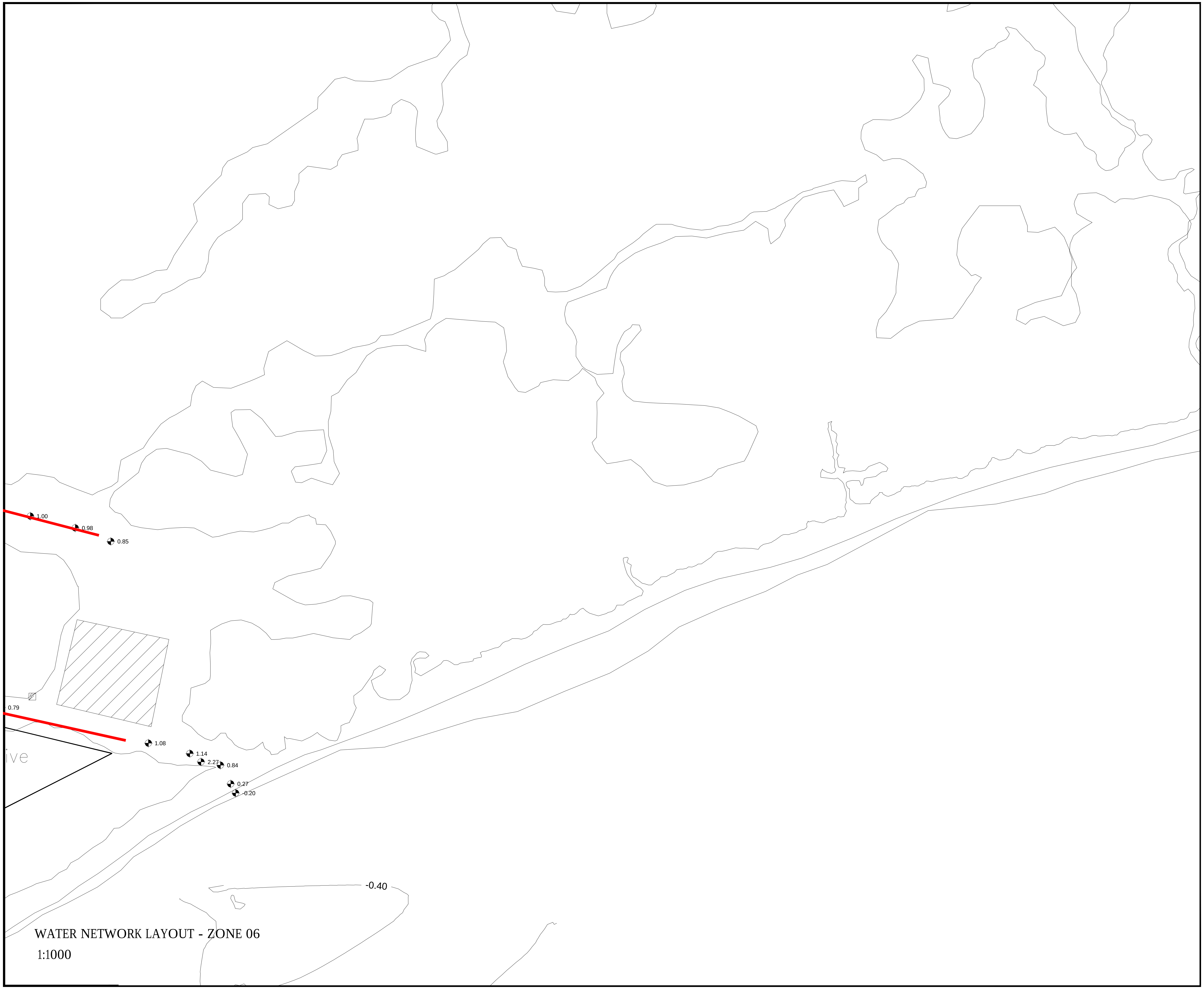

WATER NETWORK LAYOUT - ZONE 06

1:1000

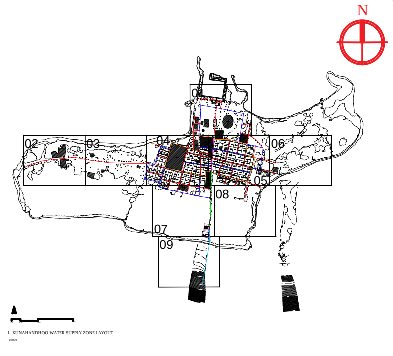

Legend

🟥	Ø63 HDPE Water Main Distribution Pipe	🟦	Ø75 HDPE Water Main Distribution Pipe
🟪	Ø90 HDPE Water Main Distribution Pipe	🟧	Ø110 HDPE Water Main Distribution Pipe
🟩	Ø160 HDPE Water Main Distribution Pipe	🟦	Ø110 HDPE Brine Outfall Pipe
⊗	Gate Valves	⋈	Washout Valves
●	Junction		

Notes:
1. All levels are shown in meters.
2. All levels are shown from mean sea level.
3. This drawing to be read in conjunction with all other relevant drawing and specifications.
4. All pressure pipes and fittings shall be installed using electro-fusion and butt-fusion technologies.
5. All pressure pipes shall be laid in between 0.7m - 1.0m below natural ground level to achieve best flat alignment based on topographic survey.
6. All the service connections to the mains shall be made using electro-fusion saddle and coupler.
7. Minimum size of the main water supply network shall be OD 63mm PE100, PN10, SDR17 HDPE pipe.
8. Minimum size of the house service line shall be OD 25mm PE100, PN16, SDR11 HDPE pipe.
9. Minimum size of commercial and other institutional connection service line shall be 50mm, PE100, PN16, SDR11 HDPE pipe.

MAINS DISTRIBUTION

DIAMETER (mm)	LENGTH HDPE (m)	TYPE OF PIPE
63	4301	HDPE (PE100,PN10,SDR17)
75	2426	
90	194	
110	1453	
160	316	
Total	8690	

Gate Valves - 20 nos
Washout Valves - 02 nos

OUTFALL

DIAMETER (mm)	LENGTH HDPE (m)	TYPE OF PIPE
110	-82m (on land) -236m (offshore)	HDPE (PE100,PN10,SDR11)

PSM BENCHMARKS

PERMANENT SURVEY MARK PSM_0099
318628.0850E, 197674.0730N
1.608m From MSL

PERMANENT SURVEY MARK PSM_0100
318485.463E, 197250.969N
0.370m From MSL

PERMANENT SURVEY MARK PSM_0101
318884.223E, 197157.653N
0.485m From MSL

R00	JUNE 2020	STAGE -1	PD	SBC	SD
REV. NO.	Date	Revision Description	Drawn	Chkd	Appd.

Title:
Consultancy Services for Survey, Design and EIA works of Water Supply and Sewerage Facilities in 5 islands, Maldives - Package 6

Sub Title:
Water Supply System in L. Kunahandhoo

Client:
Ministry of National Planning, Housing and Infrastructure, Republic of Maldives

EPOCH ASSOCIATES
T: +960 333 3528
E: info@epoch.associates
W: www.epoch.associates
A: G. Rosary West,
Husnuheenaa Magu, Male', Maldives

FEEDBACK INFRA
Making Infrastructure Happen

Drawn: F.I.A.
Checked: M.S.S.
Designed: F.I.A.
Approved: I.W.
Date: Aug 2020
SCALE (A3): 1:1000
Project No: EP-WS/2019/06
Rev: R-01
Page: 08

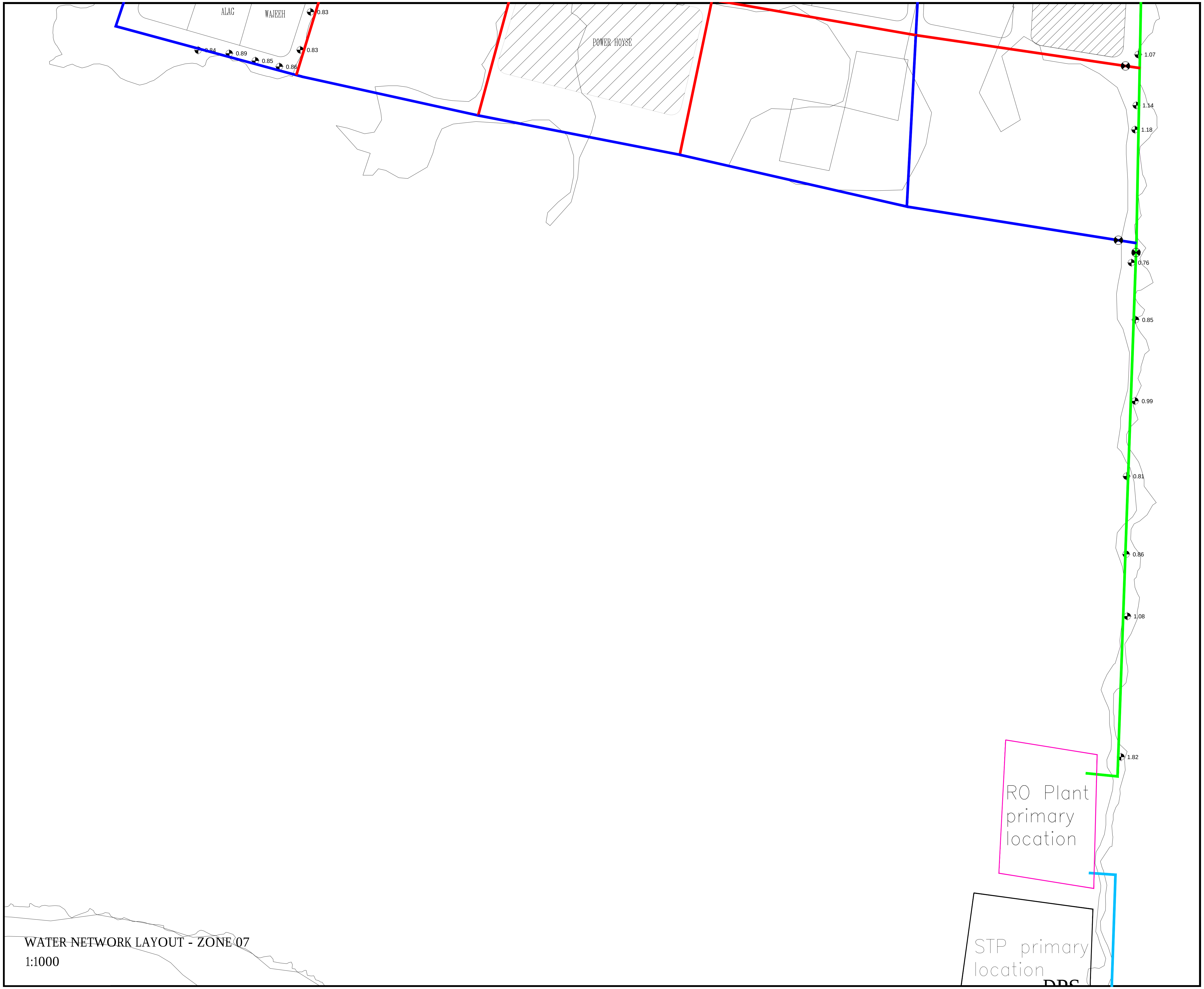

WATER NETWORK LAYOUT - ZONE 07
1:1000

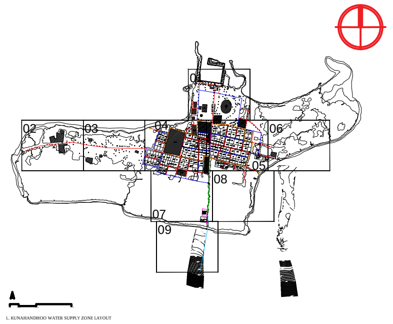

Legend

🟥	Ø63 HDPE Water Main Distribution Pipe	🟦	Ø75 HDPE Water Main Distribution Pipe
🟪	Ø90 HDPE Water Main Distribution Pipe	🟧	Ø110 HDPE Water Main Distribution Pipe
🟩	Ø160 HDPE Water Main Distribution Pipe	🟦	Ø110 HDPE Brine Outfall Pipe
⊗	Gate Valves	⋈	Washout Valves
●	Junction		

Notes:
1. All levels are shown in meters.
2. All levels are shown from mean sea level.
3. This drawing to be read in conjunction with all other relevant drawing and specifications.
4. All pressure pipes and fittings shall be installed using electro-fusion and butt-fusion technologies.
5. All pressure pipes shall be laid in between 0.7m - 1.0m below natural ground level to achieve best flat alignment based on topographic survey.
6. All the service connections to the mains shall be made using electro-fusion saddle and coupler.
7. Minimum size of the main water supply network shall be OD 63mm PE100, PN10, SDR17 HDPE pipe.
8. Minimum size of the house service line shall be OD 25mm PE100, PN16, SDR11 HDPE pipe.
9. Minimum size of commercial and other institutional connection service line shall be 50mm, PE100, PN16, SDR11 HDPE pipe.

MAINS DISTRIBUTION

DIAMETER (mm)	LENGTH HDPE (m)	TYPE OF PIPE
63	4301	HDPE (PE100,PN10,SDR17)
75	2426	
90	194	
110	1453	
160	316	
Total	8690	

Gate Valves - 20 nos
Washout Valves - 02 nos

OUTFALL

DIAMETER (mm)	LENGTH HDPE (m)	TYPE OF PIPE
110	-82m (on land) -236m (offshore)	HDPE (PE100,PN10,SDR11)

PSM BENCHMARKS

PERMANENT SURVEY MARK PSM_0099
318628.0850E, 197674.0730N
1.608m From MSL

PERMANENT SURVEY MARK PSM_0100
318485.463E, 197250.969N
0.370m From MSL

PERMANENT SURVEY MARK PSM_0101
318884.223E, 197157.653N
0.485m From MSL

R00	JUNE 2020	STAGE -1	PD	SBC	SD
REV. NO.	Date	Revision Description	Drawn	Chkd	Appd.

Title:
Consultancy Services for Survey, Design and EIA works of Water Supply and Sewerage Facilities in 5 islands, Maldives - Package 6

Sub Title:
Water Supply System in L. Kunahandhoo

Client:
Ministry of National Planning, Housing and Infrastructure, Republic of Maldives

EPOCH
ASSOCIATES
T: +960 333 3528
E: info@epoch.associates
W: wwww.epoch.associates
A: G. Rosary West,
Husnuheenaa Magu, Male', Maldives

FEEDBACK INFRA
Making Infrastructure Happen

Drawn: F.I.A.
Checked: M.S.S.
Designed: F.I.A.
Approved: I.W.
Date: Aug 2020
SCALE (A3): 1:1000
Project No: EP-WS/2019/06
Rev: R-01
Page: 09

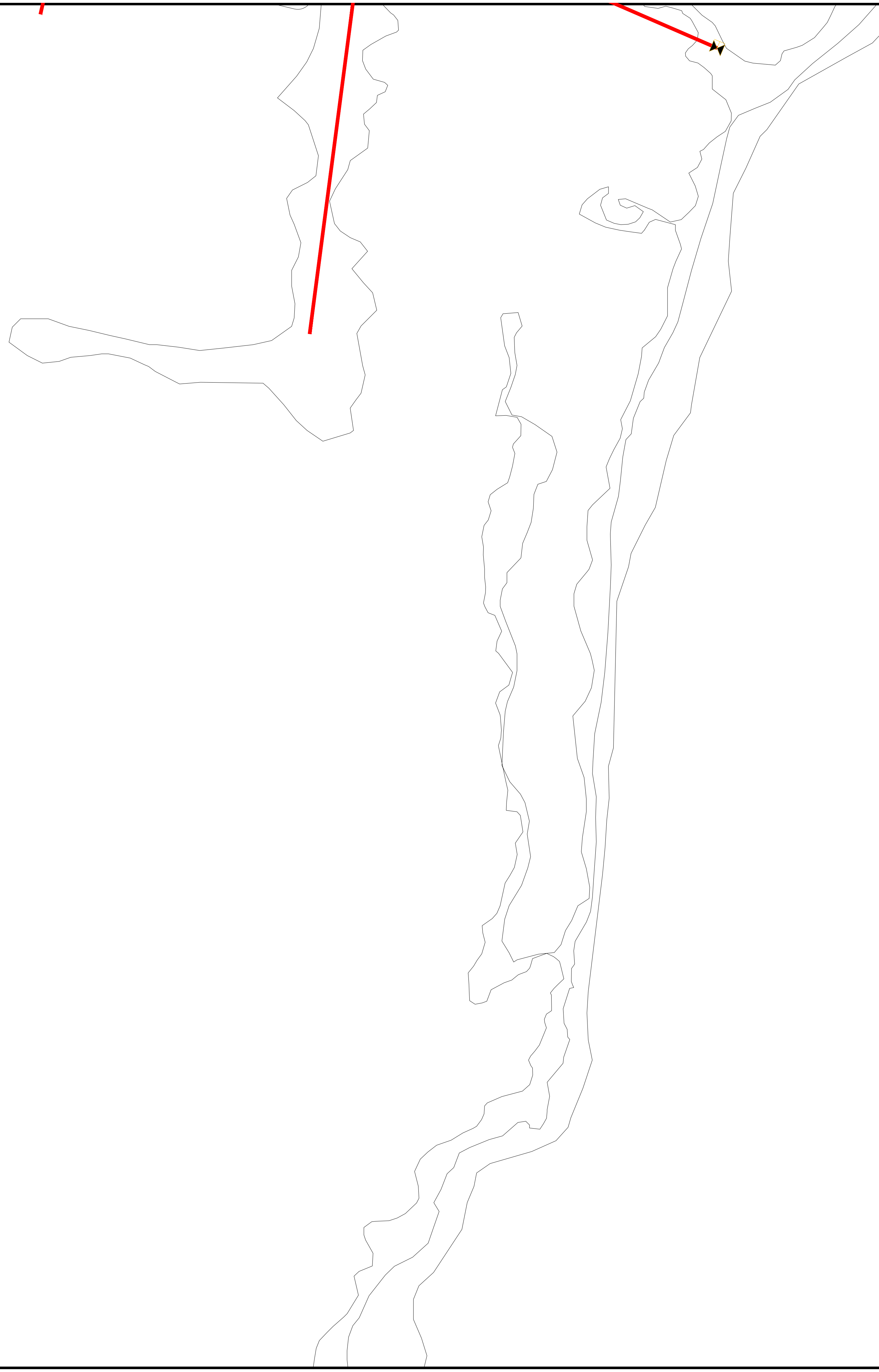

WATER NETWORK LAYOUT - ZONE 08

1:1000

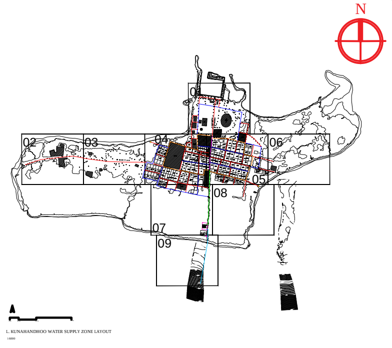

L. KUNAHANDHOO WATER SUPPLY ZONE LAYOUT

1:6000

Legend

🟥	Ø63 HDPE Water Main Distribution Pipe	🟦	Ø75 HDPE Water Main Distribution Pipe
▬	Ø90 HDPE Water Main Distribution Pipe	🟧	Ø110 HDPE Water Main Distribution Pipe
🟩	Ø160 HDPE Water Main Distribution Pipe	▬	Ø110 HDPE Brine Outfall Pipe
⊗	Gate Valves	⋈	Washout Valves
●	Junction		

Notes:
1. All levels are shown in meters.
2. All levels are shown from mean sea level.
3. This drawing to be read in conjunction with all other relevant drawing and specifications.
4. All pressure pipes and fittings shall be installed using electro-fusion and butt-fusion technologies.
5. All pressure pipes shall be laid in between 0.7m - 1.0m below natural ground level to achieve best flat alignment based on topographic survey.
6. All the service connections to the mains shall be made using electro-fusion saddle and coupler.
7. Minimum size of the main water supply network shall be OD 63mm PE100, PN10, SDR17 HDPE pipe.
8. Minimum size of the house service line shall be OD 25mm PE100, PN16, SDR11 HDPE pipe.
9. Minimum size of commercial and other institutional connection service line shall be 50mm, PE100, PN16, SDR11 HDPE pipe.

MAINS DISTRIBUTION

DIAMETER (mm)	LENGTH HDPE (m)	TYPE OF PIPE
63	4301	HDPE (PE100,PN10,SDR17)
75	2426	
90	194	
110	1453	
160	316	
Total	8690	

Gate Valves - 20 nos
Washout Valves - 02 nos

OUTFALL

DIAMETER (mm)	LENGTH HDPE (m)	TYPE OF PIPE
110	-82m (on land) -236m (offshore)	HDPE (PE100,PN10,SDR11)

PSM BENCHMARKS

PERMANENT SURVEY MARK PSM_0099
318628.0850E, 197674.0730N
1.608m From MSL

PERMANENT SURVEY MARK PSM_0100
318485.463E, 197250.969N
0.370m From MSL

PERMANENT SURVEY MARK PSM_0101
318884.223E, 197157.653N
0.485m From MSL

R00	JUNE 2020	STAGE -1	PD	SBC	SD
REV. NO.	Date	Revision Description	Drawn	Chkd	Appd.

Title:

Consultancy Services for Survey, Design and EIA works of Water Supply and Sewerage Facilities in 5 islands, Maldives - Package 6

Sub Title:

Water Supply System in L. Kunahandhoo

Client:

Ministry of National Planning, Housing and Infrastructure, Republic of Maldives

EPOCH ASSOCIATES
T: +960 333 3528
E: info@epoch.associates
W: wwww.epoch.associates
A: G. Rosary West,
Husnuheenaa Magu, Male', Maldives

FEEDBACK INFRA
Making Infrastructure Happen

Drawn: F.I.A.
Checked: M.S.S.
Designed: F.I.A.
Approved: I.W.
Date: Aug 2020
SCALE (A3): 1:1000
Project No: EP-WS/2019/06
Rev: R-01

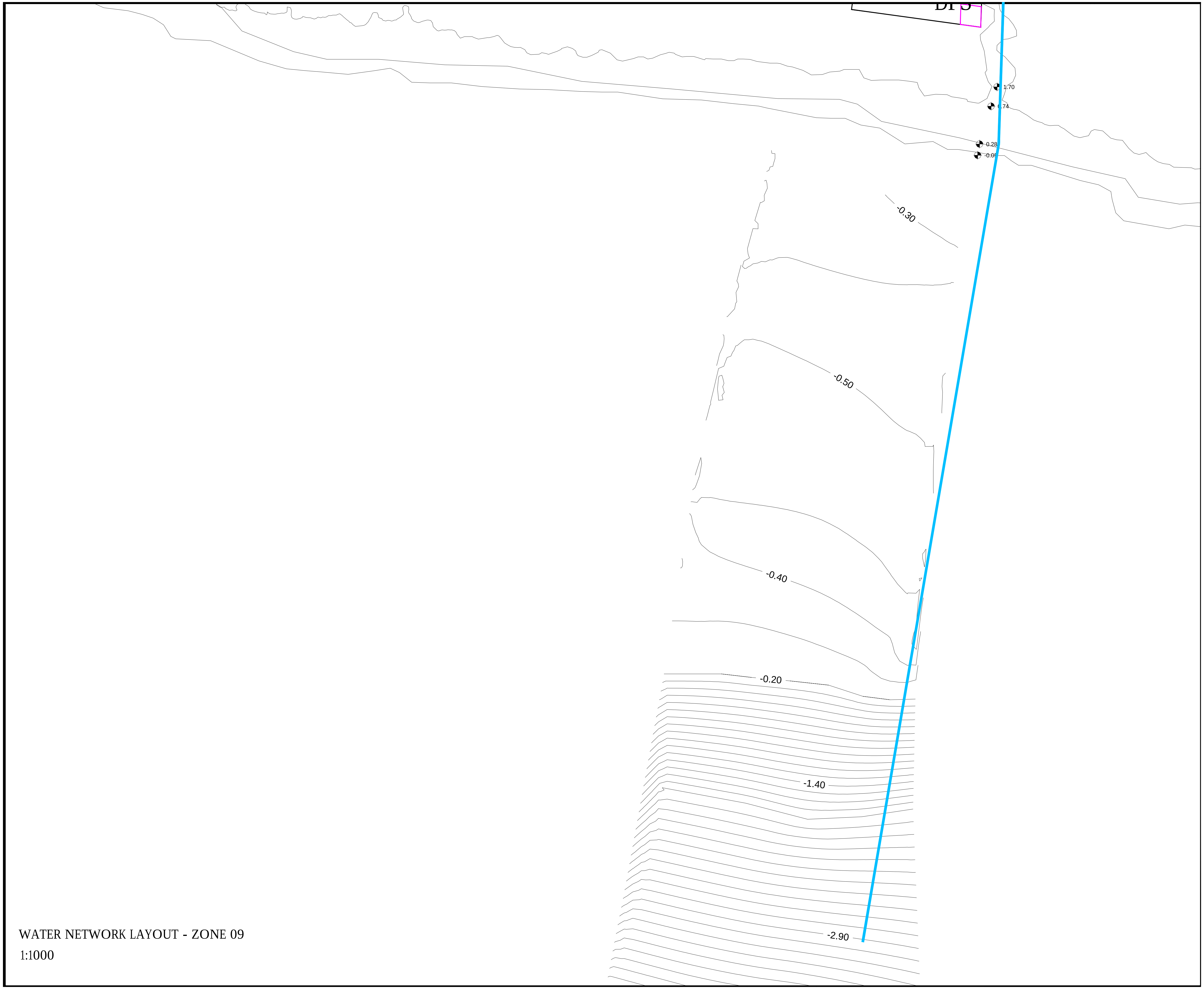

WATER NETWORK LAYOUT - ZONE 09

1:1000

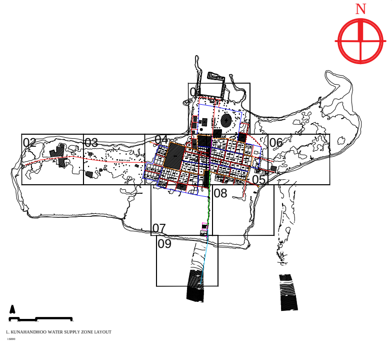

Legend

🟥	Ø63 HDPE Water Main Distribution Pipe	🟦	Ø75 HDPE Water Main Distribution Pipe
🟪	Ø90 HDPE Water Main Distribution Pipe	🟧	Ø110 HDPE Water Main Distribution Pipe
🟩	Ø160 HDPE Water Main Distribution Pipe	🟦	Ø110 HDPE Brine Outfall Pipe
⊗	Gate Valves	⧓	Washout Valves
●	Junction		

Notes:
1. All levels are shown in meters.
2. All levels are shown from mean sea level.
3. This drawing to be read in conjunction with all other relevant drawing and specifications.
4. All pressure pipes and fittings shall be installed using electro-fusion and butt-fusion technologies.
5. All pressure pipes shall be laid in between 0.7m - 1.0m below natural ground level to achieve best flat alignment based on topographic survey.
6. All the service connections to the mains shall be made using electro-fusion saddle and coupler.
7. Minimum size of the main water supply network shall be OD 63mm PE100, PN10, SDR17 HDPE pipe.
8. Minimum size of the house service line shall be OD 25mm PE100, PN16, SDR11 HDPE pipe.
9. Minimum size of commercial and other institutional connection service line shall be 50mm, PE100, PN16, SDR11 HDPE pipe.

MAINS DISTRIBUTION

DIAMETER (mm)	LENGTH HDPE (m)	TYPE OF PIPE
63	4301	HDPE (PE100,PN10,SDR17)
75	2426	
90	194	
110	1453	
160	316	
Total	8690	

Gate Valves - 20 nos
Washout Valves - 02 nos

OUTFALL

DIAMETER (mm)	LENGTH HDPE (m)	TYPE OF PIPE
110	-82m (on land) -236m (offshore)	HDPE (PE100,PN10,SDR11)

PSM BENCHMARKS

PERMANENT SURVEY MARK PSM_0099
318628.0850E, 197674.0730N
1.608m From MSL

PERMANENT SURVEY MARK PSM_0100
318485.463E, 197250.969N
0.370m From MSL

PERMANENT SURVEY MARK PSM_0101
318884.223E, 197157.653N
0.485m From MSL

R00	JUNE 2020	STAGE -1	PD	SBC	SD
REV. NO.	Date	Revision Description	Drawn	Chkd	Appd.

Title:
Consultancy Services for Survey, Design and EIA works of Water Supply and Sewerage Facilities in 5 islands, Maldives - Package 6

Sub Title:
Water Supply System in L. Kunahandhoo

Client:
Ministry of National Planning, Housing and Infrastructure, Republic of Maldives

EPOCH ASSOCIATES
T: +960 333 3528
E: info@epoch.associates
W: wwww.epoch.associates
A: G. Rosary West,
Husnuheenaa Magu, Male', Maldives

FEEDBACK INFRA
Making Infrastructure Happen

Drawn:	F.I.A.	Checked:	M.S.S.
Designed:	F.I.A.	Approved:	I.W.
Date:	Aug 2020	SCALE (A3):	1:1000
Project No:	EP-WS/2019/06		
Rev:	R-01	Page:	11

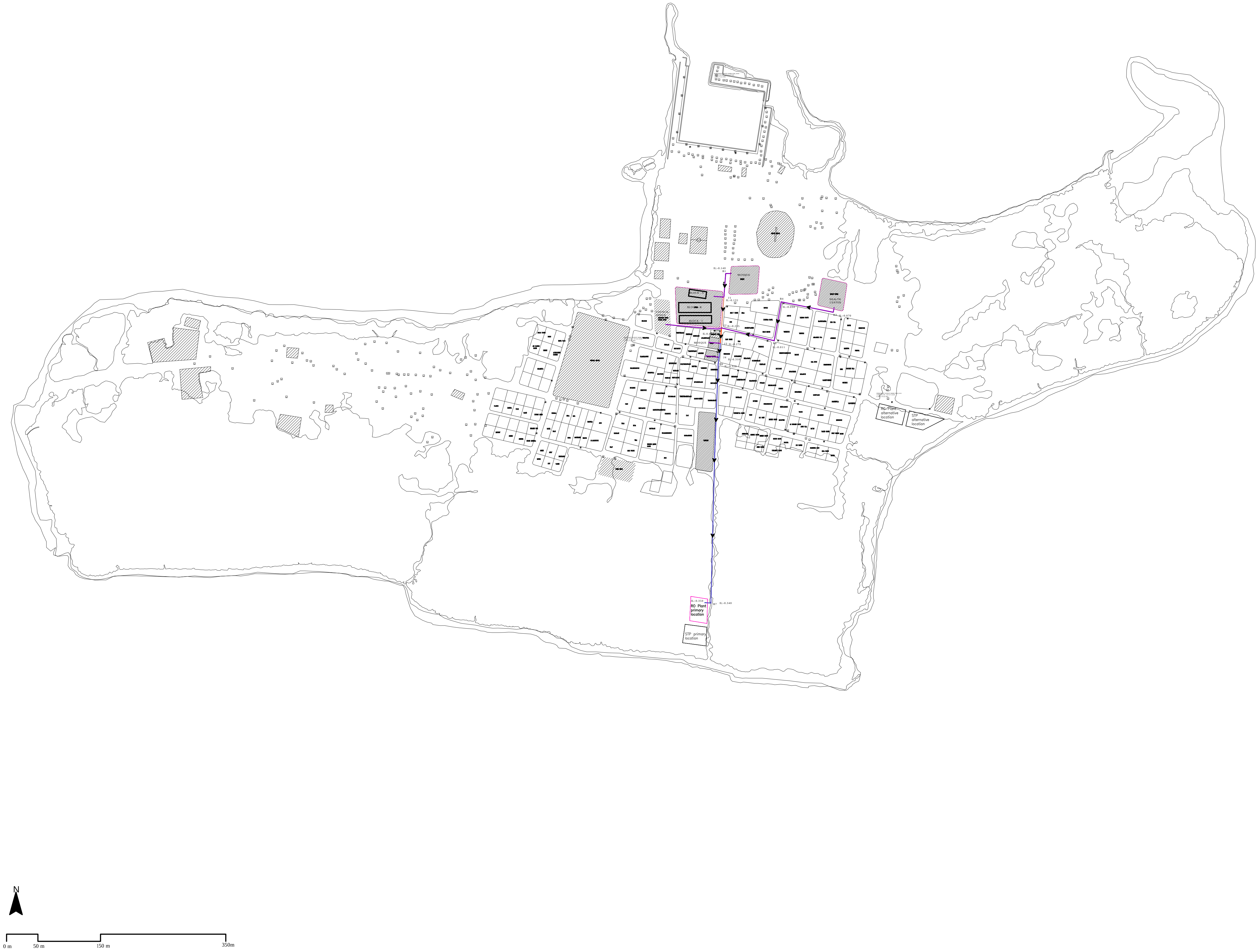
IL:-0.140
B1
MOSQUE
BLOCK - A
BLOCK - B
BLOCK - C
COUNCIL OFFICE
J1
IL:-0.155
J2
IL:-0.235
MOSQUE
J3
IL:-0.270
J4
IL:-0.310
B6
IL:-0.320
B4
IL:-0.090
B3
IL:-0.070
B5
IL:-0.011
HEALTH CENTER
RO Plant alternative location
STP alternative location
IL:-0.350
RO Plant primary location
B7
IL:-0.340
STP primary location
N
0 m
50 m
150 m
350m

L. KUNAHANDHOO RAINWATER COLLECTION NETWORK

1:6000

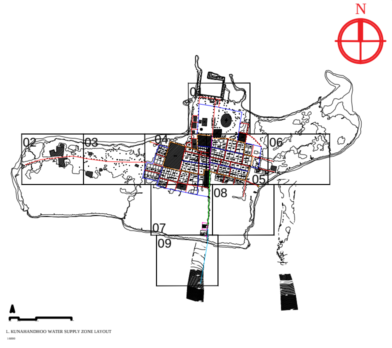
N
01
02
03
04
05
06
07
08
09
L. KUNAHANDHOO WATER SUPPLY ZONE LAYOUT
1:6000

Legend

- 🟪 Ø160 HDPE Rainwater Flow Pipe
- 🟧 Ø225 HDPE Rainwater Flow Pipe
- 🟥 Ø250 HDPE Rainwater Flow Pipe
- 🟦 Ø280 HDPE Rainwater Flow Pipe
- ● Junction

Notes:

1. All levels are shown in meters.
2. All levels are shown from mean sea level.
3. This drawing to be read in conjunction with all other relevant drawing and specifications.
4. All gravity pipes should be HDPE PE100, PN6, SDR26 pipes.
5. All gravity pipes are to be laid as per invert levels indicated. Any change based on site condition should be made based on approval from engineer.

RAINWATER FLOW PIPES

DIAMETER (mm)	LENGTH HDPE (m)	TYPE OF PIPE
160	435	HDPE (PE100,PN6,SDR26)
225	49	
250	25	
280	425	
Total	934	

PSM BENCHMARKS

PERMANENT SURVEY MARK PSM_0099
318628.0850E, 197674.0730N
1.608m From MSL

PERMANENT SURVEY MARK PSM_0100
318485.463E, 197250.969N
0.370m From MSL

PERMANENT SURVEY MARK PSM_0101
318884.223E, 197157.653N
0.485m From MSL

R00	JUNE 2020	STAGE -1	PD	SBC	SD
REV. NO.	Date	Revision Description	Drawn	Chkd	Appd.

Title:

Consultancy Services for Survey, Design and EIA works of Water Supply and Sewerage Facilities in 5 islands, Maldives - Package 6

Sub Title:

Water Supply System in L. Kunahandhoo

Client:

Ministry of National Planning, Housing and Infrastructure, Republic of Maldives

EPOCH ASSOCIATES

T: +960 333 3528
E: info@epoch.associates
W: wwww.epoch.associates
A: G. Rosary West,
Husnuheenaa Magu, Male', Maldives

FEEDBACK INFRA
Making Infrastructure Happen

Drawn: F.I.A.
Checked: M.S.S.
Designed: F.I.A.
Approved: I.W.
Date: Aug 2020
SCALE (A3): 1:6000
Project No: EP-WS/2019/06
Rev: R-01
Page: 12

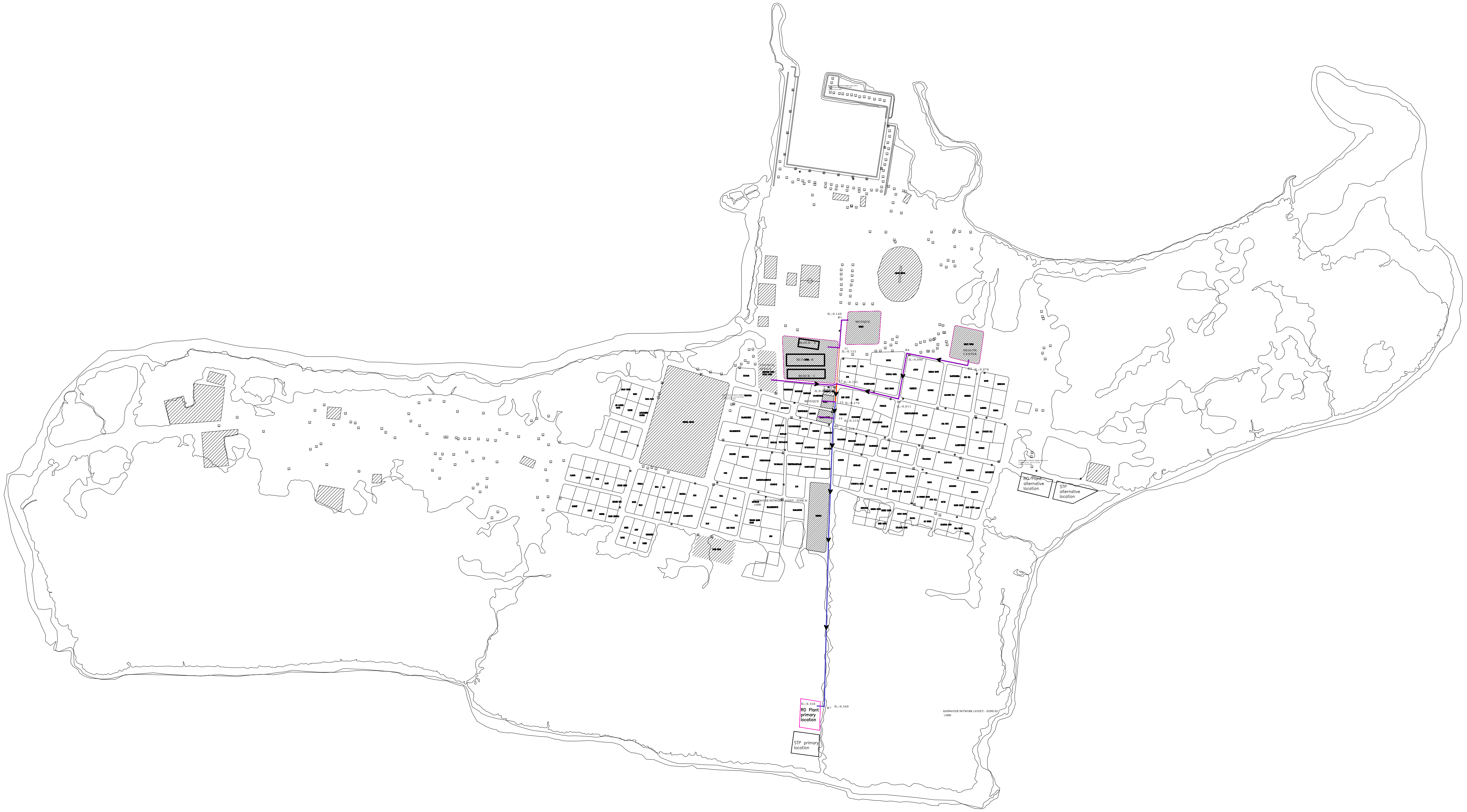
IL:-0.350
RO Plant primary location
B7
IL:-0.340
STP primary location
RO Plant alternative location
STP alternative location
MOSQUE
PERMANENT SURVEY MARK PSM_0101
RAINWATER NETWORK LAYOUT - ZONE 02
1:1000

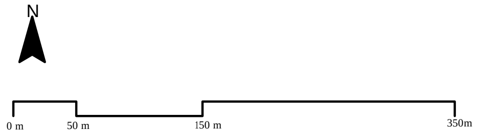
N
0 m
50 m
150 m
350m

L. KUNAHANDHOO RAINWATER COLLECTION ZONE NETWORK

1:6000

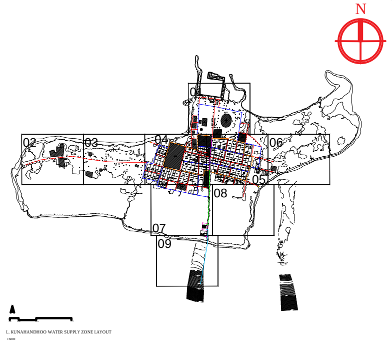
N
01
02
03
04
05
06
07
08
09
L. KUNAHANDHOO WATER SUPPLY ZONE LAYOUT
1:6000

Legend

▬	Ø160 HDPE Rainwater Flow Pipe	▬	Ø225 HDPE Rainwater Flow Pipe
▬	Ø250 HDPE Rainwater Flow Pipe	▬	Ø280 HDPE Rainwater Flow Pipe
●	Junction		

Notes:

1. All levels are shown in meters.
2. All levels are shown from mean sea level.
3. This drawing to be read in conjunction with all other relevant drawing and specifications.
4. All gravity pipes should be HDPE PE100, PN6, SDR26 pipes.
5. All gravity pipes are to be laid as per invert levels indicated. Any change based on site condition should be made based on approval from engineer.

RAINWATER FLOW PIPES

DIAMETER (mm)	LENGTH HDPE (m)	TYPE OF PIPE
160	435	HDPE (PE100,PN6,SDR26)
225	49	
250	25	
280	425	
Total	934	

PSM BENCHMARKS

⊕	PERMANENT SURVEY MARK PSM_0099 318628.0850E, 197674.0730N 1.608m From MSL
⊕	PERMANENT SURVEY MARK PSM_0100 318485.463E, 197250.969N 0.370m From MSL
⊕	PERMANENT SURVEY MARK PSM_0101 318884.223E, 197157.653N 0.485m From MSL

R00	JUNE 2020	STAGE -1	PD	SBC	SD
REV. NO.	Date	Revision Description	Drawn	Chkd	Appd.

Title:

Consultancy Services for Survey, Design and EIA works of Water Supply and Sewerage Facilities in 5 islands, Maldives - Package 6

Sub Title:

Water Supply System in L. Kunahandhoo

Client:

Ministry of National Planning, Housing and Infrastructure, Republic of Maldives

EPOCH ASSOCIATES
T: +960 333 3528
E: info@epoch.associates
W: wwww.epoch.associates
A: G. Rosary West,
Husnuheenaa Magu, Male', Maldives

FEEDBACK INFRA
Making Infrastructure Happen

Drawn: F.I.A.
Checked: M.S.S.
Designed: F.I.A.
Approved: I.W.
Date: Aug 2020
SCALE (A3): 1:6000
Project No: EP-WS/2019/06
Rev: R-01
Page: 13

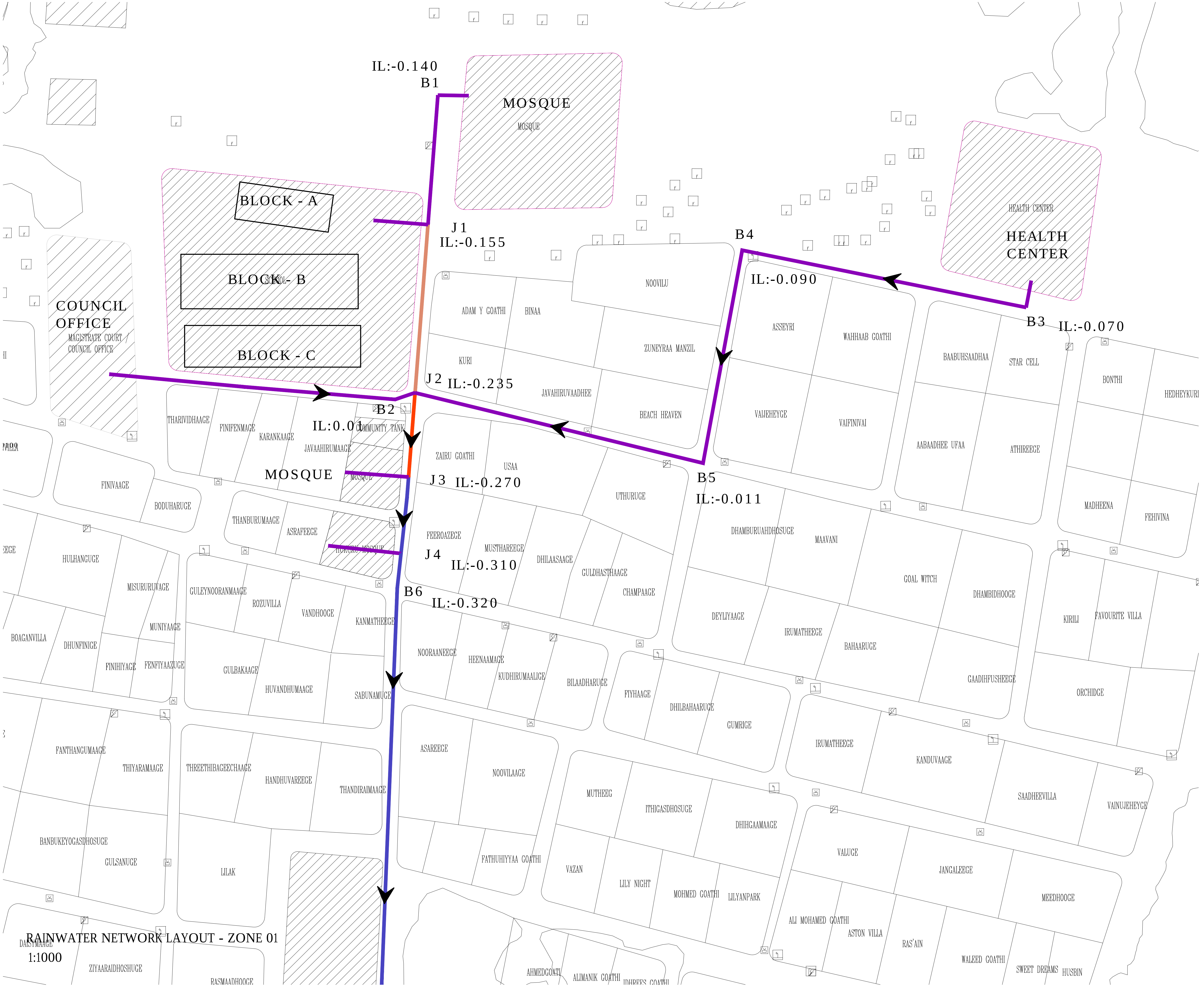
IL:-0.140
B1
MOSQUE
BLOCK - A
BLOCK - B
BLOCK - C
J1
IL:-0.155
COUNCIL
OFFICE
MAGISTRATE COURT / COUNCIL OFFICE
J2
IL:-0.235
B2
IL:0.01
COMMUNITY TANK
MOSQUE
J3
IL:-0.270
J4
IL:-0.310
B6
IL:-0.320
B4
IL:-0.090
HEALTH
CENTER
B3
IL:-0.070
B5
IL:-0.011
NOOVILU
ADAM Y GOATHI
BINAA
KURI
ZUNEYRAA MANZIL
JAVAHIRUVAADHEE
BEACH HEAVEN
ASSEYRI
WAHHAAB GOATHI
VAIJEHEYGE
VAIFINIVAI
BAABUHSAADHAA
STAR CELL
AABAADHEE UFAA
ATHIREEGE
BONTHI
HEDHEYKURI
MADHEENA
FEHIVINA
THARIVIDHAAGE
FINIFENMAGE
KARANKAAGE
JAVAAHIRUMAAGE
ZAIRU GOATHI
USAA
UTHURUGE
FINIVAAGE
BODUHARUGE
THANBURUMAAGE
ASRAFEEGE
FEEROAZEGE
MUSTHAREEGE
DHILAASAAGE
GULDHASTHAAGE
CHAMPAAGE
DHAMBURUAHDHOSUGE
MAAVANI
GOAL WITCH
DHAMBIDHOOGE
HULHANGUGE
MISURURUVAGE
GULEYNOORANMAAGE
ROZUVILLA
VANDHOOGE
KANMATHEEGE
MUNIYAAGE
BOAGANVILLA
DHUNFINIGE
FINIHIYAGE
FENFIYAAZUGE
GULBAKAAGE
HUVANDHUMAAGE
SABUNAMUGE
NOORAANEEGE
HEENAAMAAGE
KUDHIRUMAALIGE
BILAADHARUGE
DEYLIYAAGE
IRUMATHEEGE
BAHAARUGE
GAADHIFUSHEEGE
KIRILI
FAVOURITE VILLA
ORCHIDGE
FIYHAAGE
DHILBAHAARUGE
GUMRIGE
IRUMATHEEGE
KANDUVAAGE
SAADHEEVILLA
VAINUJEHEYGE
FANTHANGUMAAGE
THIYARAMAAGE
THREETHIBAGEECHAAGE
HANDHUVAREEGE
THANDIRAIMAAGE
ASAREEGE
NOOVILAAGE
MUTHEEG
ITHIGASDHOSUGE
DHIHGAAMAAGE
VALUGE
JANGALEEGE
MEEDHOOGE
BANBUKEYOGASDHOSUGE
GULSANUGE
LILAK
FATHUHIYYAA GOATHI
VAZAN
LILY NIGHT
MOHMED GOATHI
LILYANPARK
ALI MOHAMED GOATHI
ASTON VILLA
RAS'AIN
WALEED GOATHI
SWEET DREAMS
HUSBIN
DAISYMAAGE
ZIYAARAIDHOSHUGE
RASMAADHOOGE
AHMEDGOATI
ALIMANIK GOATHI
JEHREES GOATHI

RAINWATER NETWORK LAYOUT - ZONE 01

1:1000

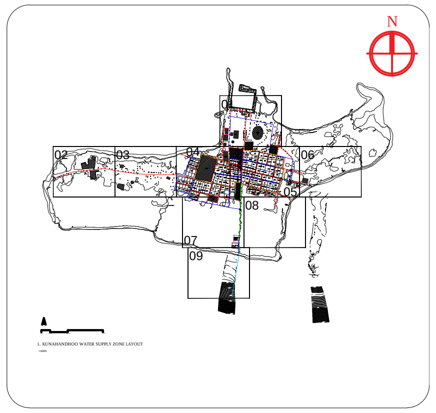
N
02
03
04
05
06
07
08
09

Legend

- ▬ Ø160 HDPE Rainwater Flow Pipe
- ▬ Ø225 HDPE Rainwater Flow Pipe
- ▬ Ø250 HDPE Rainwater Flow Pipe
- ▬ Ø280 HDPE Rainwater Flow Pipe
- ● Junction

Notes:

1. All levels are shown in meters.
2. All levels are shown from mean sea level.
3. This drawing to be read in conjunction with all other relevant drawing and specifications.
4. All gravity pipes should be HDPE PE100, PN6, SDR26 pipes.
5. All gravity pipes are to be laid as per invert levels indicated. Any change based on site condition should be made based on approval from engineer.

RAINWATER FLOW PIPES

DIAMETER (mm)	LENGTH HDPE (m)	TYPE OF PIPE
160	435	HDPE (PE100,PN6,SDR26)
225	49	
250	25	
280	425	
Total	934	

PSM BENCHMARKS

PERMANENT SURVEY MARK PSM_0099
318628.0850E, 197674.0730N
1.608m From MSL

PERMANENT SURVEY MARK PSM_0100
318485.463E, 197250.969N
0.370m From MSL

PERMANENT SURVEY MARK PSM_0101
318884.223E, 197157.653N
0.485m From MSL

REV. NO.	Date	Revision Description	Drawn	Chkd	Appd.
R00	JUNE 2020	STAGE -1	PD	SBC	SD

Title:
Consultancy Services for Survey, Design and EIA works of Water Supply and Sewerage Facilities in 5 islands, Maldives - Package 6

Sub Title:
Water Supply System in L. Kunahandhoo

Client:
Ministry of National Planning, Housing and Infrastructure, Republic of Maldives

EPOCH ASSOCIATES

T: +960 333 3528
E: info@epoch.associates
W: wwww.epoch.associates
A: G. Rosary West,
Husnuheenaa Magu, Male', Maldives

FEEDBACK INFRA
Making Infrastructure Happen

Drawn: F.I.A.
Checked: M.S.S.
Designed: F.I.A.
Approved: I.W.
Date: Aug 2020
SCALE (A3): 1:1000
Project No: EP-WS/2019/06
Rev: R-01
Page: 14

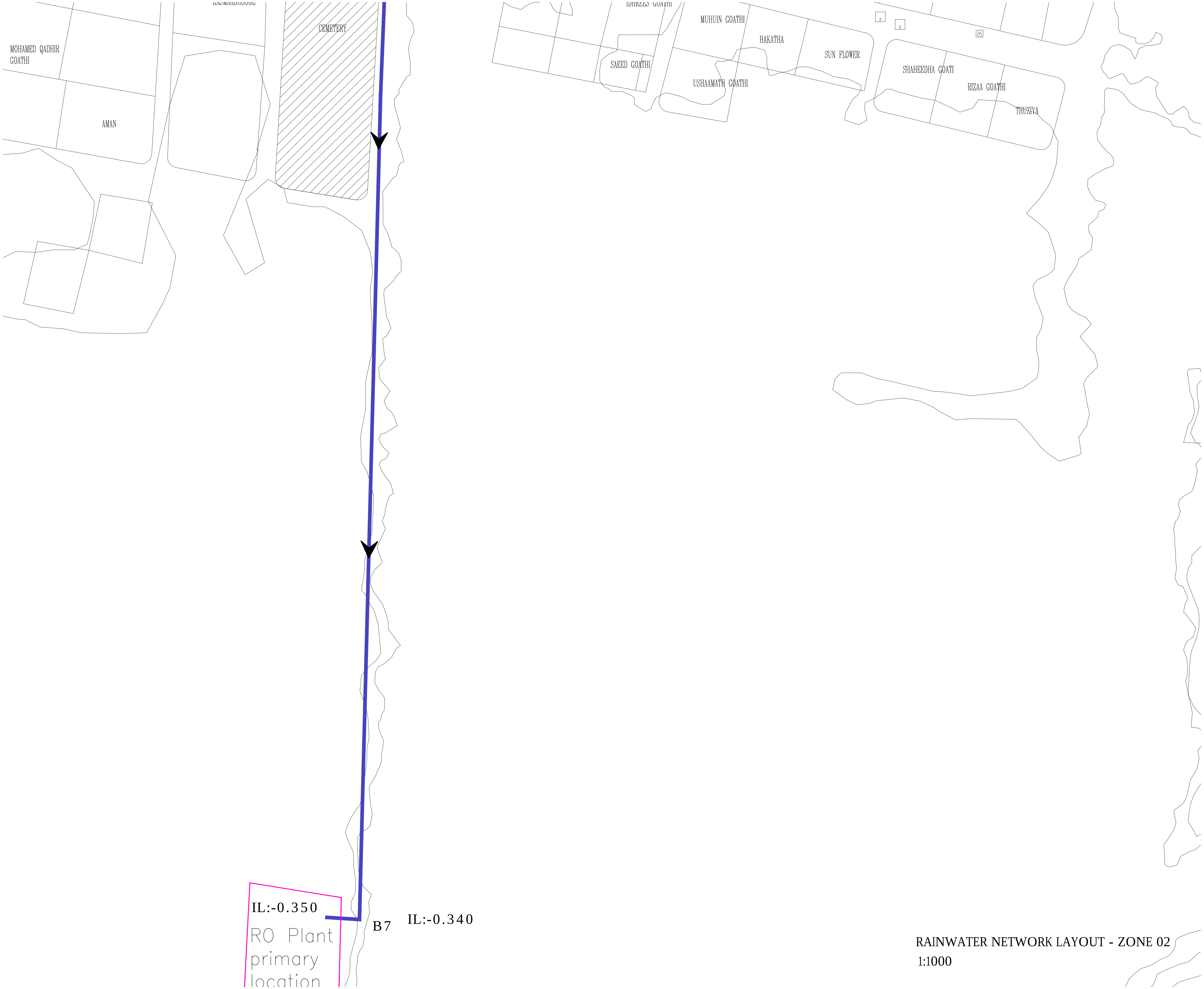
MOHAMED QADHIR GOATHI
AMAN
CEMETERY
MUHUIN GOATHI
HAKATHA
SUN FLOWER
SAEED GOATHI
USHAAMATH GOATHI
SHAHEEDHA GOATI
RIZAA GOATHI
THUZIYA
IL:-0.350
RO Plant primary location
B7
IL:-0.340

RAINWATER NETWORK LAYOUT - ZONE 02
1:1000

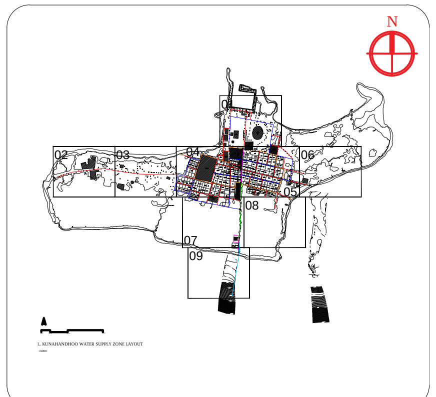
N
02
03
04
06
07
08
09

Legend

Ø160 HDPE Rainwater Flow Pipe	Ø225 HDPE Rainwater Flow Pipe
Ø250 HDPE Rainwater Flow Pipe	Ø280 HDPE Rainwater Flow Pipe
● Junction	

Notes:

1. All levels are shown in meters.
2. All levels are shown from mean sea level.
3. This drawing to be read in conjunction with all other relevant drawing and specifications.
4. All gravity pipes should be HDPE PE100, PN6, SDR26 pipes.
5. All gravity pipes are to be laid as per invert levels indicated. Any change based on site condition should be made based on approval from engineer.

RAINWATER FLOW PIPES

DIAMETER (mm)	LENGTH HDPE (m)	TYPE OF PIPE
160	435	HDPE (PE100,PN6,SDR26)
225	49	
250	25	
280	425	
Total	934	

PSM BENCHMARKS

PERMANENT SURVEY MARK PSM_0099
318628.0850E, 197674.0730N
1.608m From MSL

PERMANENT SURVEY MARK PSM_0100
318485.463E, 197250.969N
0.370m From MSL

PERMANENT SURVEY MARK PSM_0101
318884.223E, 197157.653N
0.485m From MSL

REV. NO.	Date	Revision Description	Drawn	Chkd	Appd.
R00	JUNE 2020	STAGE -1	PD	SBC	SD

Title:
Consultancy Services for Survey, Design and EIA works of Water Supply and Sewerage Facilities in 5 islands, Maldives - Package 6

Sub Title:
Water Supply System in L. Kunahandhoo

Client:
Ministry of National Planning, Housing and Infrastructure, Republic of Maldives

T: +960 333 3528
E: info@epoch.associates
W: wwww.epoch.associates
A: G. Rosary West,
Husnuheenaa Magu, Male', Maldives

Drawn: F.I.A.
Checked: M.S.S.
Designed: F.I.A.
Approved: I.W.
Date: Aug 2020
SCALE (A3): 1:1000
Project No: EP-WS/2019/06
Rev: R-01
Page: 15

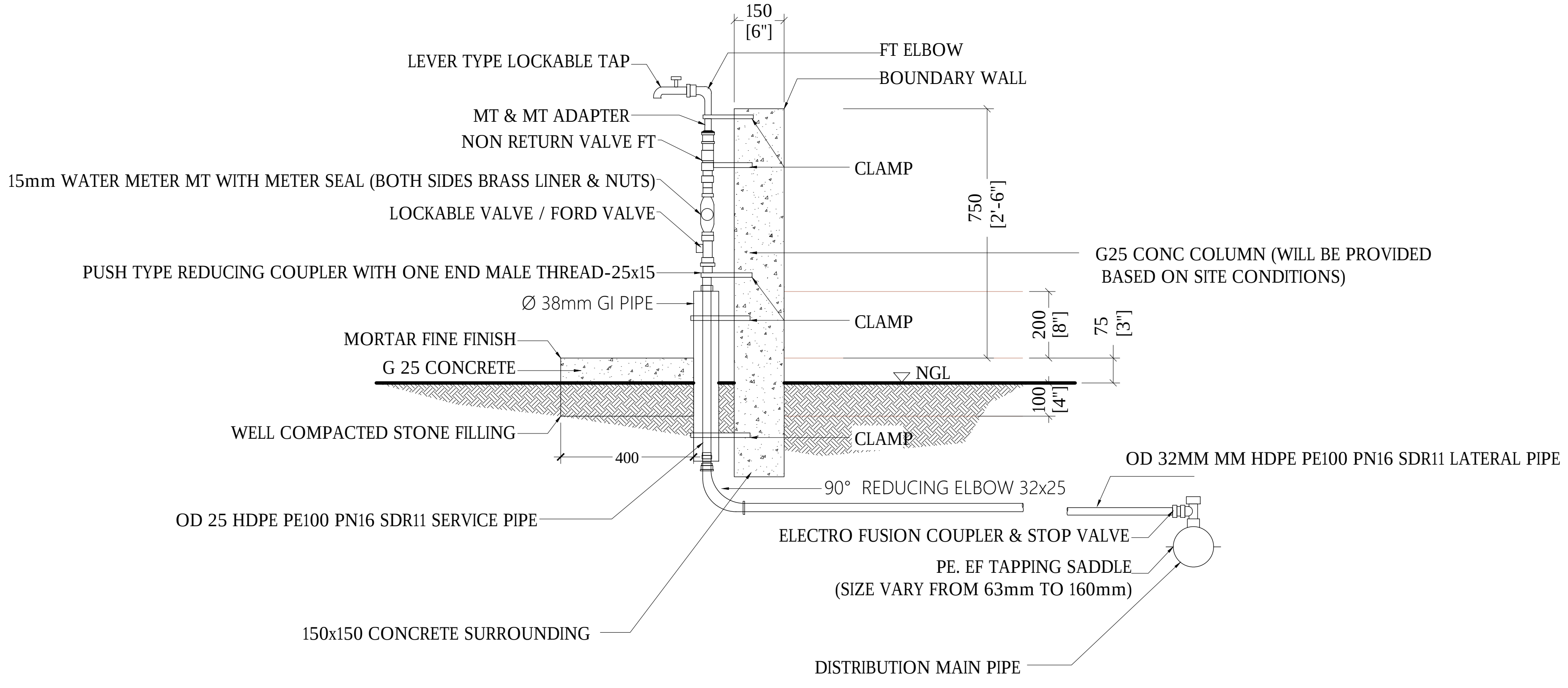
150
[6"]
LEVER TYPE LOCKABLE TAP
FT ELBOW
BOUNDARY WALL
MT & MT ADAPTER
NON RETURN VALVE FT
CLAMP
15mm WATER METER MT WITH METER SEAL (BOTH SIDES BRASS LINER & NUTS)
750
[2'-6"]
LOCKABLE VALVE / FORD VALVE
G25 CONC COLUMN (WILL BE PROVIDED
BASED ON SITE CONDITIONS)
PUSH TYPE REDUCING COUPLER WITH ONE END MALE THREAD-25x15
Ø 38mm GI PIPE
CLAMP
200
[8"]
75
[3"]
MORTAR FINE FINISH
G 25 CONCRETE
NGL
100
[4"]
WELL COMPACTED STONE FILLING
CLAMP
400
OD 32MM MM HDPE PE100 PN16 SDR11 LATERAL PIPE
90° REDUCING ELBOW 32x25
OD 25 HDPE PE100 PN16 SDR11 SERVICE PIPE
ELECTRO FUSION COUPLER & STOP VALVE
PE. EF TAPPING SADDLE
(SIZE VARY FROM 63mm TO 160mm)
150x150 CONCRETE SURROUNDING
DISTRIBUTION MAIN PIPE

WATER SUPPLY HOUSE CONNECTION DETAILS

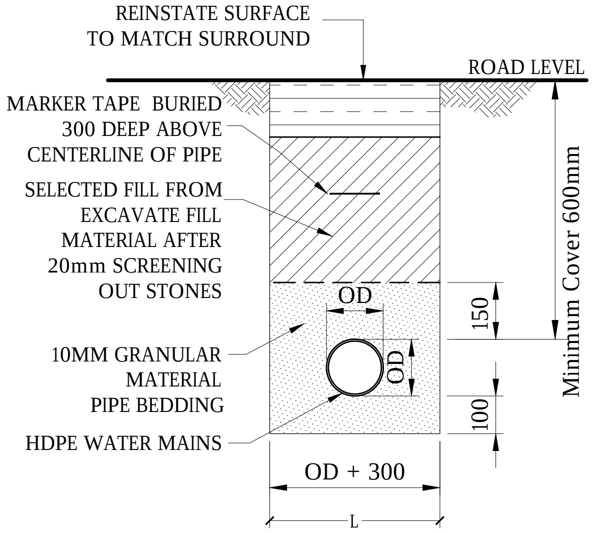
REINSTATE SURFACE
TO MATCH SURROUND
ROAD LEVEL
MARKER TAPE BURIED
300 DEEP ABOVE
CENTERLINE OF PIPE
SELECTED FILL FROM
EXCAVATE FILL
MATERIAL AFTER
20mm SCREENING
OUT STONES
OD
150
Minimum Cover 600mm
10MM GRANULAR
MATERIAL
PIPE BEDDING
OD
100
HDPE WATER MAINS
OD + 300
L

TRENCH & BEDDING DETAILS

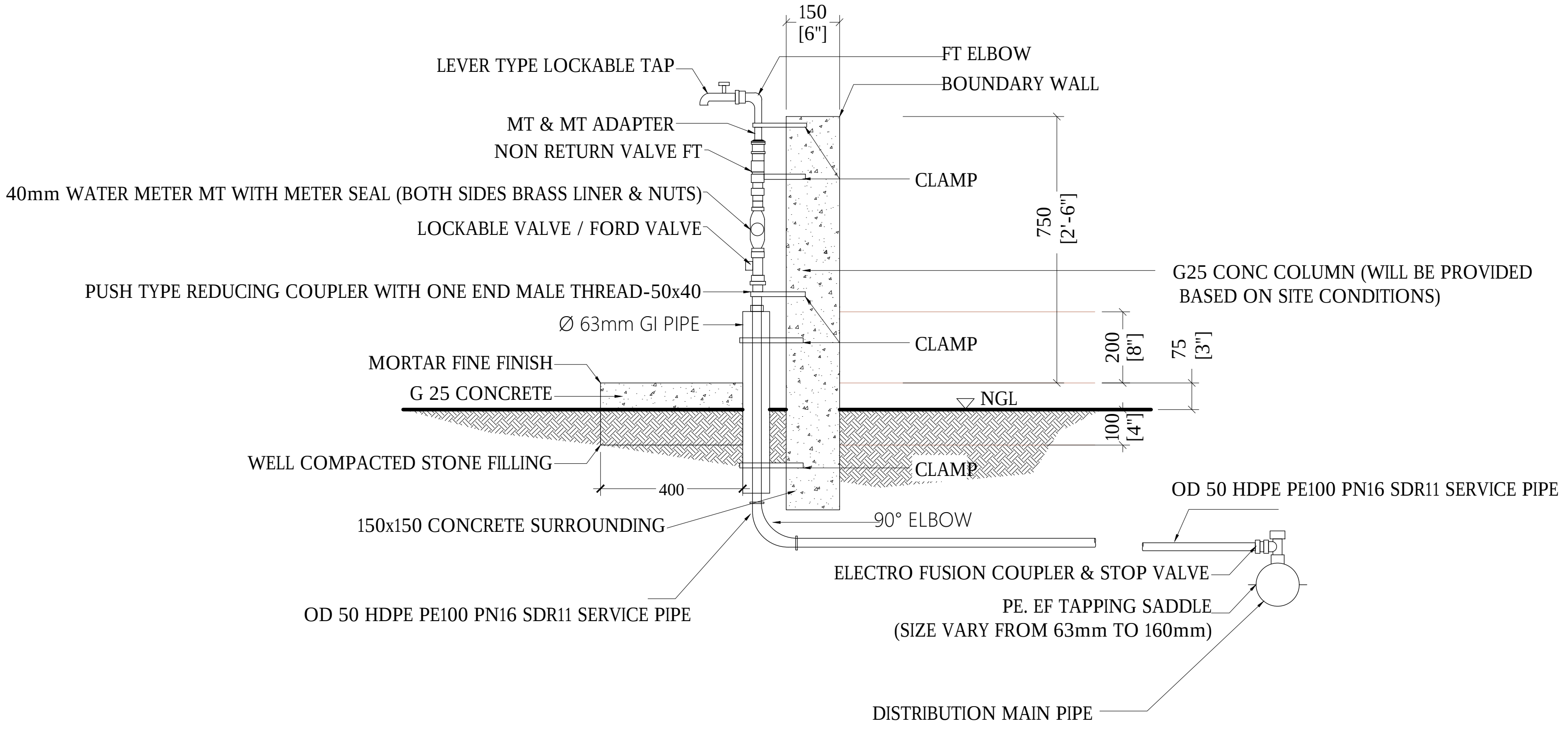
150
[6"]
LEVER TYPE LOCKABLE TAP
FT ELBOW
BOUNDARY WALL
MT & MT ADAPTER
NON RETURN VALVE FT
CLAMP
40mm WATER METER MT WITH METER SEAL (BOTH SIDES BRASS LINER & NUTS)
750
[2'-6"]
LOCKABLE VALVE / FORD VALVE
G25 CONC COLUMN (WILL BE PROVIDED
BASED ON SITE CONDITIONS)
PUSH TYPE REDUCING COUPLER WITH ONE END MALE THREAD-50x40
Ø 63mm GI PIPE
CLAMP
200
[8"]
75
[3"]
MORTAR FINE FINISH
G 25 CONCRETE
NGL
100
[4"]
WELL COMPACTED STONE FILLING
CLAMP
400
150x150 CONCRETE SURROUNDING
OD 50 HDPE PE100 PN16 SDR11 SERVICE PIPE
90° ELBOW
ELECTRO FUSION COUPLER & STOP VALVE
PE. EF TAPPING SADDLE
(SIZE VARY FROM 63mm TO 160mm)
OD 50 HDPE PE100 PN16 SDR11 SERVICE PIPE
DISTRIBUTION MAIN PIPE

WATER SUPPLY COMMERCIAL/INSTITUTIONAL CONNECTION DETAILS

WATER SUPPLY HOUSE AND COMMERCIAL/INSTITUTIONAL CONNECTIONS

1:20

N

Legend

Notes:
- Location of house connection meters to be determined based on house connection survey.
- Commercial connections for public buildings and industrial buildings to be provided as per approved connections list from island council.

REV. NO.	Date	Revision Description	Drawn	Chkd	Appd.

Title:
Consultancy Services for Survey, Design and EIA works of Water Supply and Sewerage Facilities in 5 islands, Maldives - Package 6

Sub Title:
Water Supply System in L.Kunahandhoo

Client:
Ministry of National Planning, Housing and Infrastructure, Republic of Maldives

EPOCH ASSOCIATES
T: +960 333 3528
E: info@epoch.associates
W: wwww.epoch.associates
A: G. Rosary West,
Husnuheenaa Magu, Male', Maldives

FEEDBACK INFRA
Making Infrastructure Happen

Drawn:	F.I.A.	Checked:	M.S.S.
Designed:	F.I.A.	Approved:	I.W.
Date:	Aug 2020	SCALE (A3):	1:20
Project No:	EP-WS/2019/06		
Rev:	R-01	Page:	W-01

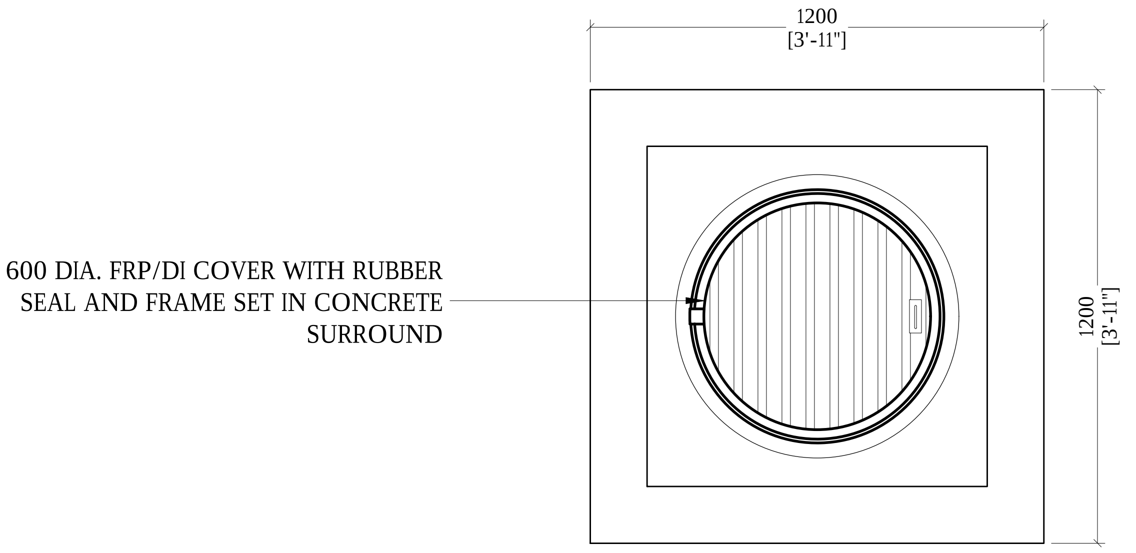
1200
[3'-11"]
1200
[3'-11"]
600 DIA. FRP/DI COVER WITH RUBBER SEAL AND FRAME SET IN CONCRETE SURROUND

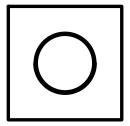

CONCRETE SUPPORT
300 X 300 X 150
PCC C20/20/S

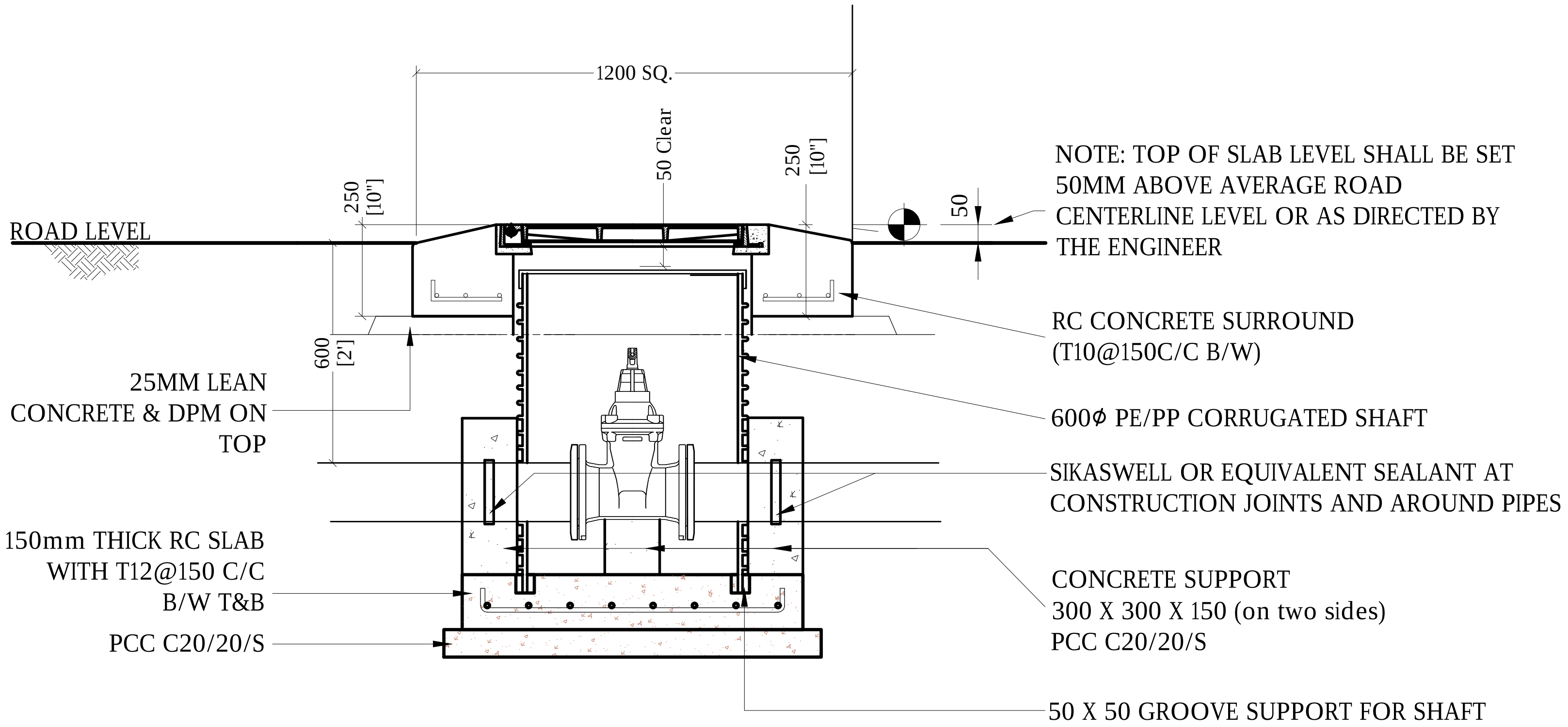
1200 SQ.
50 Clear
250
[10"]
250
[10"]
600
[2']
50
ROAD LEVEL
NOTE: TOP OF SLAB LEVEL SHALL BE SET 50MM ABOVE AVERAGE ROAD CENTERLINE LEVEL OR AS DIRECTED BY THE ENGINEER
RC CONCRETE SURROUND (T10@150C/C B/W)
25MM LEAN CONCRETE & DPM ON TOP
600Ø PE/PP CORRUGATED SHAFT
SIKASWELL OR EQUIVALENT SEALANT AT CONSTRUCTION JOINTS AND AROUND PIPES
150mm THICK RC SLAB WITH T12@150 C/C B/W T&B
CONCRETE SUPPORT 300 X 300 X 150 (on two sides) PCC C20/20/S
PCC C20/20/S
50 X 50 GROOVE SUPPORT FOR SHAFT

SECTION - VALVE CHAMBER

Legend

Notes:
-All structural concrete shall be of grade C25.
-All castings shall be done using sulphate resistant portland cement to BS 4027:1996.
-All structural reinforcement shall be epoxy coating of non-pre-stressed reinforcement to ASTM-A775/A775M.
-A cover of 75mm should be given for all reinforcements.

REV. NO.	Date	Revision Description	Drawn	Chkd	Appd.

Title:
Consultancy Services for Survey, Design and EIA works of Water Supply and Sewerage Facilities in 5 islands, Maldives - Package 6

Sub Title:
Water Supply System in L.Kunahandhoo

Client:
Ministry of National Planning, Housing and Infrastructure, Republic of Maldives

EPOCH ASSOCIATES
T: +960 333 3528
E: info@epoch.associates
W: wwww.epoch.associates
A: G. Rosary West, Husnuheenaa Magu, Male', Maldives

FEEDBACK INFRA

Drawn: F.I.A.
Checked: M.S.S.
Designed: F.I.A.
Approved: I.W.
Date: Aug 2020
SCALE (A3): 1:20
Project No: EP-WS/2019/06
Rev: R-01
Page: W-02

VALVE CHAMBER DETAILS
1:20

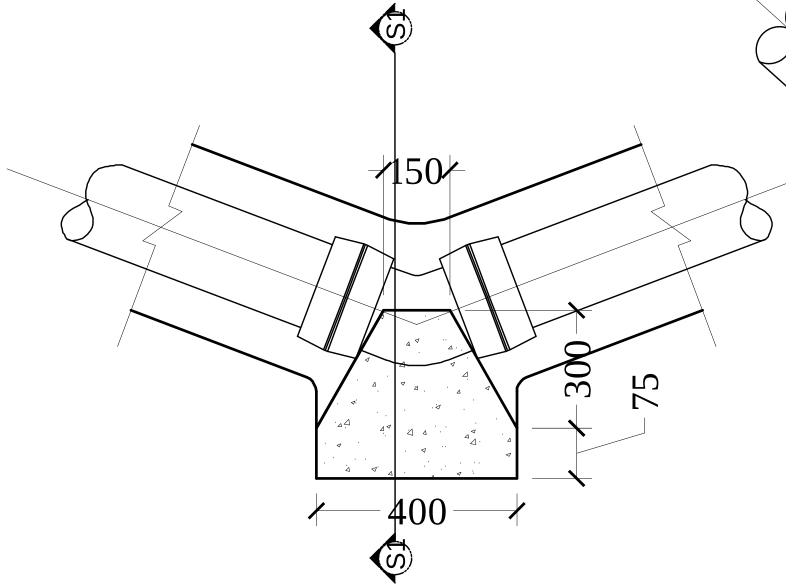
S1
150
300
75
400
S1

HORIZONTAL 45° BEND

NTS

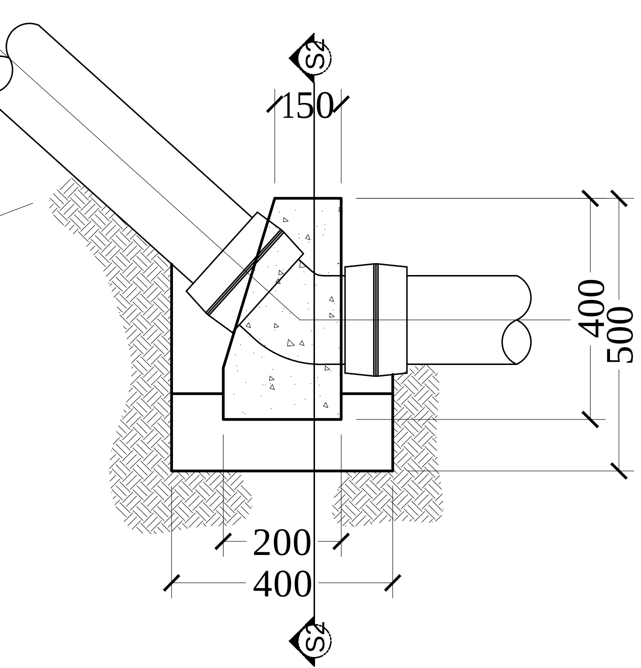
S2
150
400
500
200
400
S2

VERTICAL 45° BEND

NTS

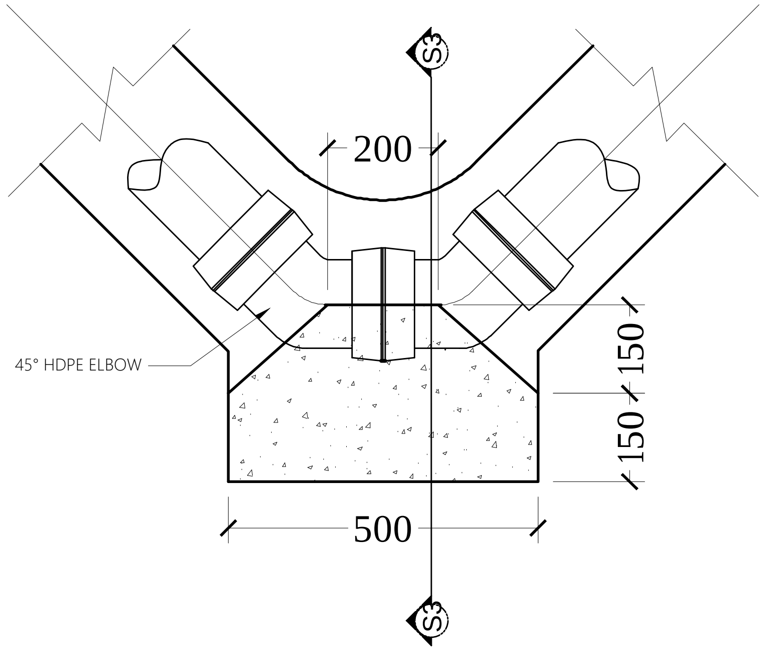
S3
200
45° HDPE ELBOW
150
150
500
S3

HORIZONTAL 90° BEND

NTS

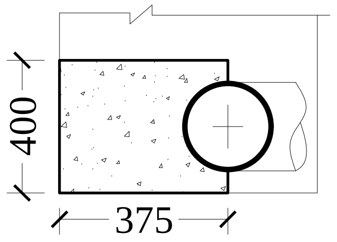

SECTION S1-S1

NTS

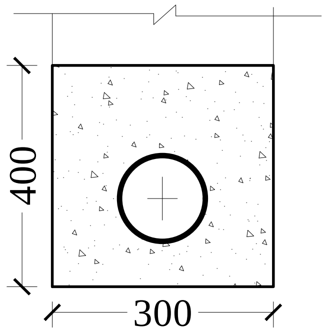

SECTION S2-S2

NTS

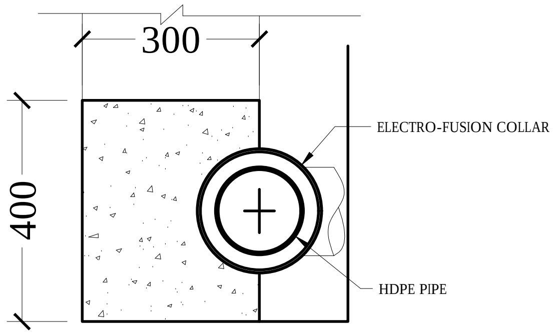
300
400
ELECTRO-FUSION COLLAR
HDPE PIPE

SECTION S3-S3

NTS

THRUST BLOCK DETAILS

NTS

N

Legend

Notes:
-All structural concrete shall be of grade C25.
-All castings shall be done using sulphate resistant portland cement to BS 4027:1996.

REV. NO.	Date	Revision Description	Drawn	Chkd	Appd.

Title:
Consultancy Services for Survey, Design and EIA works of Water Supply and Sewerage Facilities in 5 islands, Maldives - Package 6

Sub Title:
Water Supply System in L.Kunahandhoo

Client:
Ministry of National Planning, Housing and Infrastructure, Republic of Maldives

EPOCH ASSOCIATES
T: +960 333 3528
E: info@epoch.associates
W: wwww.epoch.associates
A: G. Rosary West,
Husnuheenaa Magu, Male', Maldives

FEEDBACK INFRA
Making Infrastructure Happen

Drawn: F.I.A.
Checked: M.S.S.
Designed: F.I.A.
Approved: I.W.
Date: Aug 2020
SCALE (A3): NTS
Project No: EP-WS/2019/06
Rev: R-01
Page: W-03

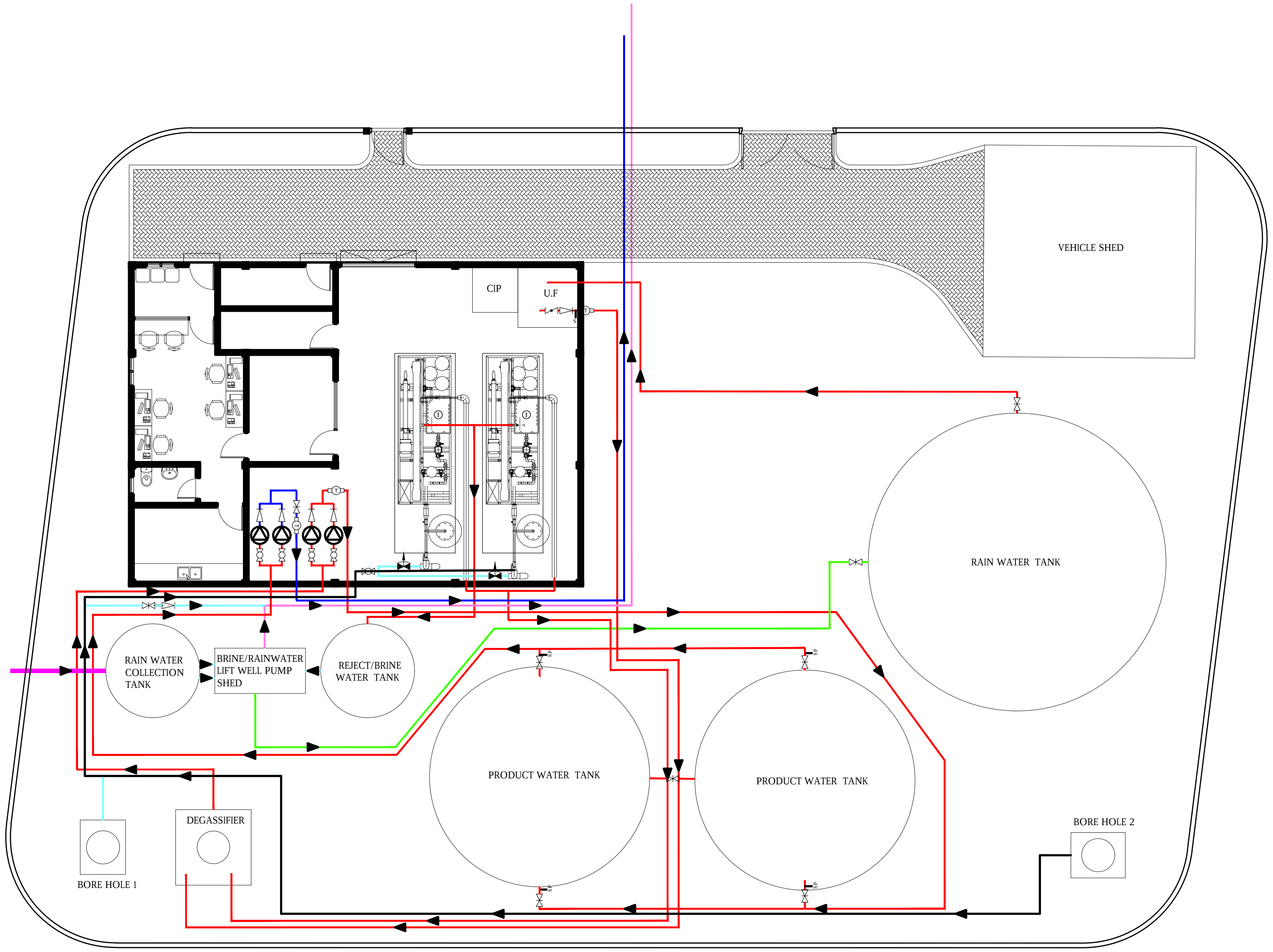

PUMP DETAILS

Borehole Pump : 2 Nos
- Flow (Q) = 14.8 m3/hr
- Head (H) = 50 m

High Pressure Pump : 2 Nos
- Flow (Q) = 7.41 m3/hr
- Pressure Range = 45-85 bar

Transfer Pump : 2 Nos
- Flow (Q) = 6.94 m3/hr
- Head (H) = 13 m

Distribution Pump Set : 2 Nos
- Flow (Q) = 10.8 m3/hr
- Head (H) = 35 m

Brine Pump : 2 Nos
- Flow (Q) = 10.37 m3/hr
- Head (H) = 18 m

Rain Water lift Well Pump : 2 Nos
- Flow (Q) = 44.75 m3/hr
- Head (H) = 15m

UF Feed Pump : 2 Nos
- Flow (Q) = 2.5 m3/hr
- Head (H) = 35 m

Gate Valve
Check Valve
Totalizer
Pump
Closed Gate Valve
Sampling Point
Butterfly Valve
Ball Valve

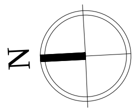

INTERNAL PIPE LAYOUT

1:200

Legend

- Ø90 HDPE (PE100, PN10, SDR17)
- Ø63 HDPE (PE100, PN10, SDR17)
- Ø110 HDPE (PE100, PN10, SDR17)
- Ø160 HDPE (PE100, P10, SDR17)
- Ø110 HDPE (OUTFALL PE100, PN16, SDR11)
- Ø300 HDPE (RAINWATER PE100, PN6, SDR26)

Notes:

- All Pump sizes are based on 15 year demands.
- Rainwater collection Pump sizing is done considering Maximum Rainfall intensity of 50mm/hr.
- UF feed pump will be subject to Approved UF Plant suppliers approval.
- Both Feed Pump and High pressure pump capacity will need to be approved by the approved RO plant Supplier. The working pressure range will be established based on the approved suppliers requirements.
- Distribution Pump set will have Variable Frequency Drive.
- All pump control float switches and automated valves will be provided.
- Contractor to produce shop drawings of interior layout based on site condition for approval by engineer.

REV. NO.	Date	Revision Description	Drawn	Chkd	Appd.

Title:
Consultancy Services for Survey, Design and EIA works of Water Supply and Sewerage Facilities in 5 islands, Maldives - Package 6

Sub Title:
Water Supply System in L.Kunahandhoo

Client:
Ministry of National Planning, Housing and Infrastructure, Republic of Maldives

EPOCH ASSOCIATES
T: +960 333 3528
E: info@epoch.associates
W: wwww.epoch.associates
A: G. Rosary West,
Husnuheenaa Magu, Male', Maldives

FEEDBACK INFRA
Making Infrastructure Happen

Drawn:	F.I.A.	Checked:	M.S.S.
Designed:	F.I.A.	Approved:	I.W.
Date:	Aug 2020	SCALE (A3):	1:200

Project No: EP-WS/2019/06

Rev: R-01
Page: W-04

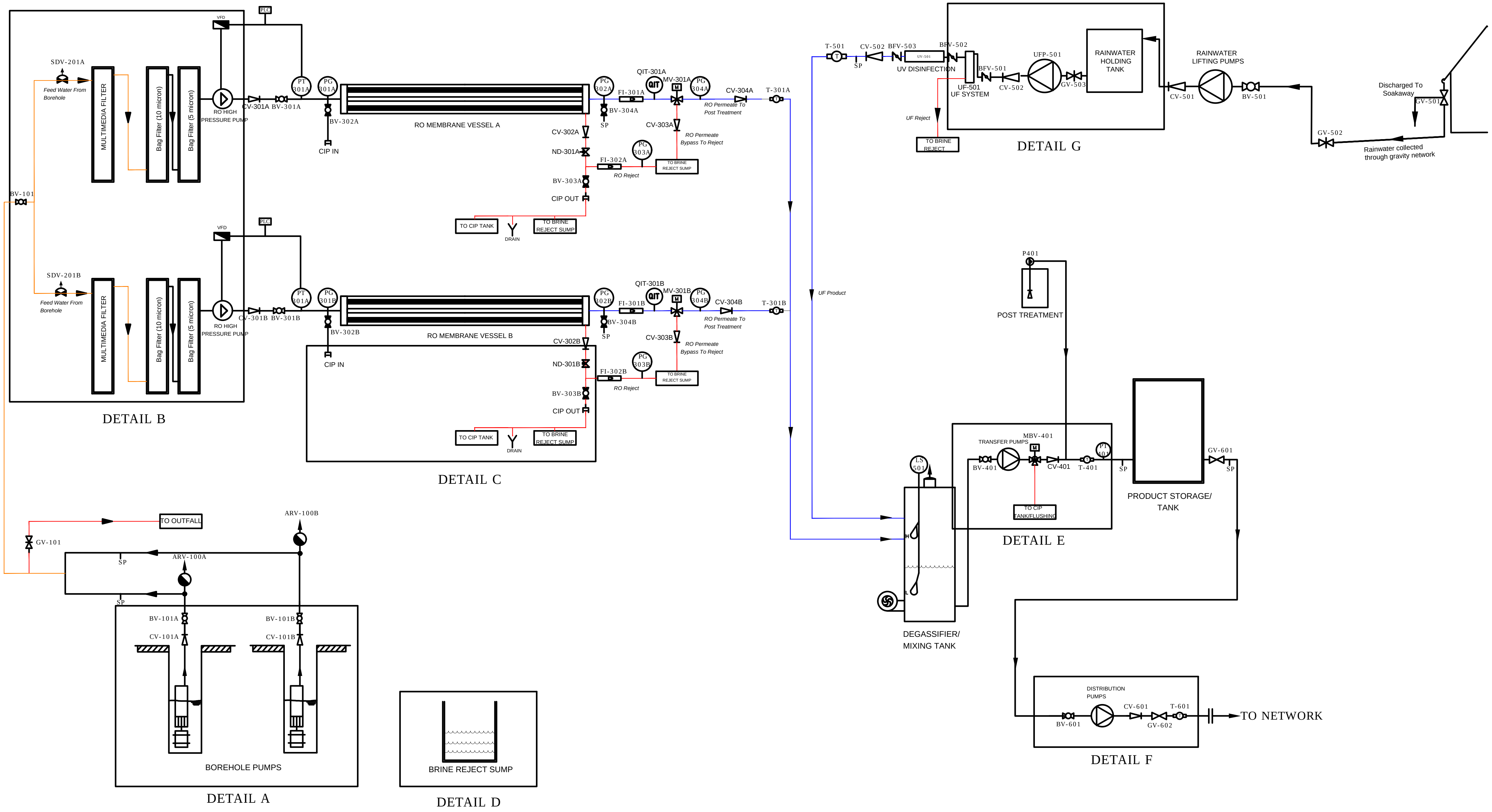
PLC
VFD
SDV-201A
Feed Water From Borehole
MULTIMEDIA FILTER
Bag Filter (10 micron)
Bag Filter (5 micron)
RO HIGH PRESSURE PUMP
CV-301A
BV-301A
PT 301A
PG 301A
BV-302A
CIP IN
RO MEMBRANE VESSEL A
PG 302A
FI-301A
BV-304A
SP
QIT-301A
QIT
MV-301A
M
PG 304A
CV-304A
T-301A
RO Permeate To Post Treatment
CV-302A
ND-301A
CV-303A
RO Permeate Bypass To Reject
PG 303A
FI-302A
RO Reject
TO BRINE REJECT SUMP
BV-303A
CIP OUT
TO CIP TANK
TO BRINE REJECT SUMP
DRAIN
BV-101
SDV-201B
Feed Water From Borehole
MULTIMEDIA FILTER
Bag Filter (10 micron)
Bag Filter (5 micron)
RO HIGH PRESSURE PUMP
CV-301B
BV-301B
PT 301A
PG 301B
BV-302B
CIP IN
RO MEMBRANE VESSEL B
PG 302B
FI-301B
BV-304B
SP
QIT-301B
MV-301B
PG 304B
CV-304B
T-301B
RO Permeate To Post Treatment
CV-302B
ND-301B
CV-303B
RO Permeate Bypass To Reject
PG 303B
FI-302B
RO Reject
TO BRINE REJECT SUMP
BV-303B
CIP OUT
TO CIP TANK
TO BRINE REJECT SUMP
DRAIN
DETAIL B
DETAIL C
TO OUTFALL
GV-101
ARV-100B
ARV-100A
SP
SP
BV-101A
CV-101A
BV-101B
CV-101B
BOREHOLE PUMPS
DETAIL A
BRINE REJECT SUMP
DETAIL D
T-501
SP
CV-502
BFV-503
UV DISINFECTION
BFV-502
BFV-501
UF-501
UF SYSTEM
CV-502
UFP-501
GV-503
RAINWATER HOLDING TANK
UF Reject
TO BRINE REJECT
DETAIL G
RAINWATER LIFTING PUMPS
CV-501
BV-501
Discharged To Soakaway
GV-501
GV-502
Rainwater collected through gravity network
UF Product
P401
POST TREATMENT
LS 501
H
L
DEGASSIFIER/ MIXING TANK
TRANSFER PUMPS
MBV-401
BV-401
CV-401
T-401
PT 401
SP
TO CIP TANK/FLUSHING
DETAIL E
PRODUCT STORAGE/ TANK
GV-601
SP
DISTRIBUTION PUMPS
BV-601
CV-601
GV-602
T-601
TO NETWORK
DETAIL F

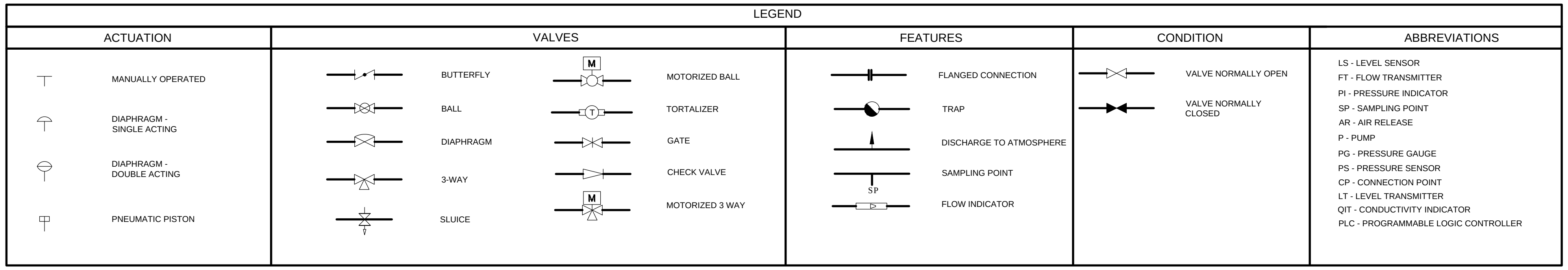

LEGEND

ACTUATION	VALVES		FEATURES	CONDITION	ABBREVIATIONS
MANUALLY OPERATED	BUTTERFLY	MOTORIZED BALL	FLANGED CONNECTION	VALVE NORMALLY OPEN	LS - LEVEL SENSOR
DIAPHRAGM - SINGLE ACTING	BALL	TORTALIZER	TRAP	VALVE NORMALLY CLOSED	FT - FLOW TRANSMITTER
DIAPHRAGM - DOUBLE ACTING	DIAPHRAGM	GATE	DISCHARGE TO ATMOSPHERE		PI - PRESSURE INDICATOR
PNEUMATIC PISTON	3-WAY	CHECK VALVE	SAMPLING POINT		SP - SAMPLING POINT
	SLUICE	MOTORIZED 3 WAY	FLOW INDICATOR		AR - AIR RELEASE
					P - PUMP
					PG - PRESSURE GAUGE
					PS - PRESSURE SENSOR
					CP - CONNECTION POINT
					LT - LEVEL TRANSMITTER
					QIT - CONDUCTIVITY INDICATOR
					PLC - PROGRAMMABLE LOGIC CONTROLLER

Legend

—	FEED LINE
—	REJECT LINE
—	PRODUCT LINE

Note:
- CPVC pipe with PN10 rating to be used for the internal pipeline of the plant except for high pressure area (HPP to MV).
- From HPP to MV SS316 piping to be used.
- CPVC pipe with PN16 rating to be used for pipe fittings.
- CPVC pipe with SDR ratio 17 ratio to be used for network.
- HPP used to have a self cooled radial piston.
- CF filters to have a plastic housing with SS304 bolt fittings at connections.
- MM filters to be sized with 32" height by 7" diameter housing.
- Borehole Pumps set to include Variable Frequency Drive (VFD)

REV. NO.	Date	Revision Description	Drawn	Chkd	Appd.

IWRM PLANT P&I OVERVIEW

NTS

Title:
Consultancy Services for Survey, Design and EIA works of Water Supply and Sewerage Facilities in 5 islands, Maldives - Package 6

Sub Title:
Water Supply System in L.Kunahandhoo

Client:
Ministry of National Planning, Housing and Infrastructure, Republic of Maldives

EPOCH ASSOCIATES
T: +960 333 3528
E: info@epoch.associates
W: wwww.epoch.associates
A: G. Rosary West,
Husnuheenaa Magu, Male', Maldives

FEEDBACK INFRA
Making Infrastructure Happen

Drawn:	F.I.A.	Checked:	M.S.S.
Designed:	F.I.A.	Approved:	I.W.
Date:	Aug 2020	SCALE (A3):	1:20

Project No: EP-WS/2019/06

Rev: R-01

Page: W-05

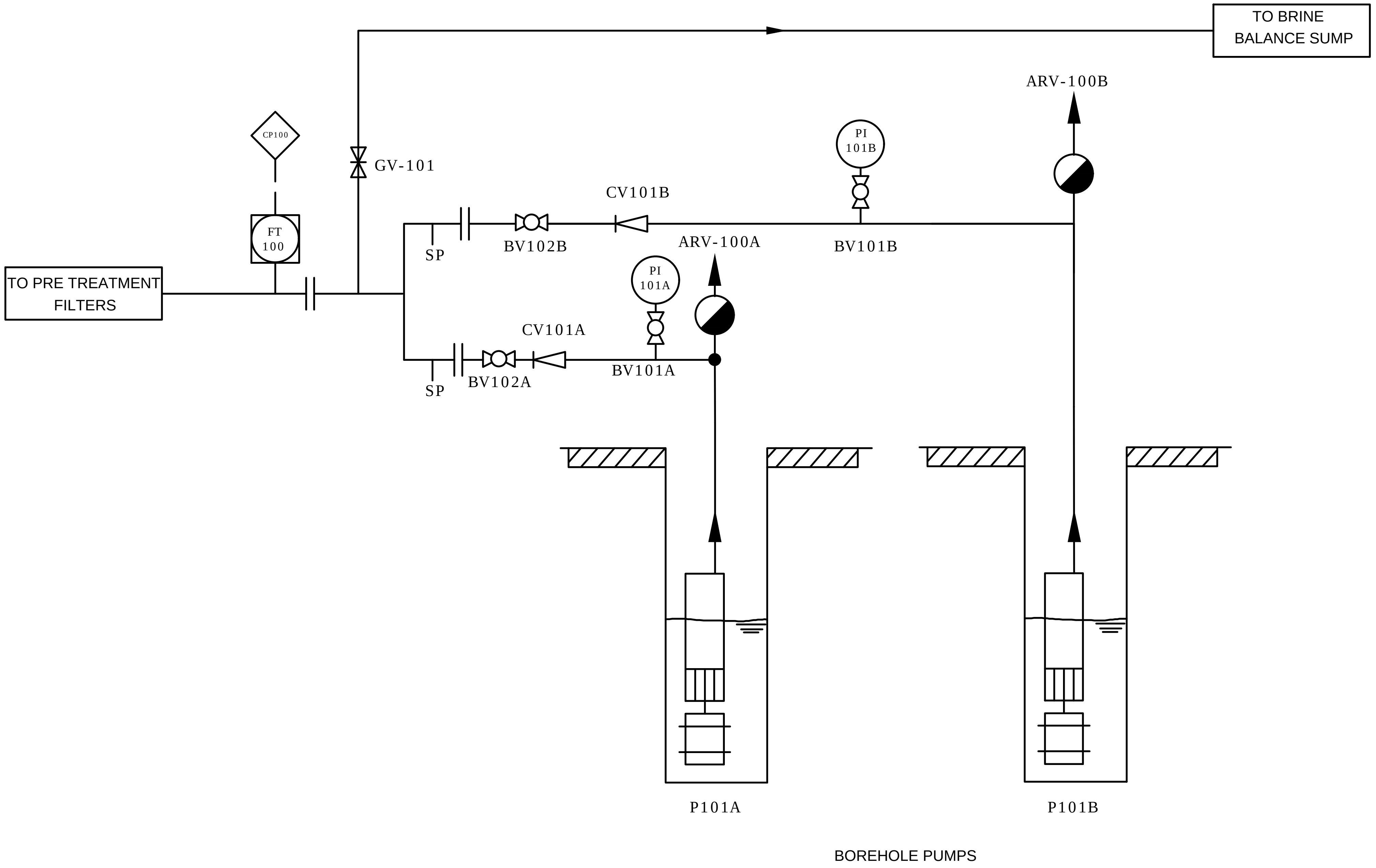
TO BRINE
BALANCE SUMP
ARV-100B
GV-101
CP100
PI
101B
CV101B
FT
100
SP
BV102B
ARV-100A
BV101B
TO PRE TREATMENT
FILTERS
PI
101A
CV101A
BV101A
SP
BV102A
P101A
P101B
BOREHOLE PUMPS

DETAIL A

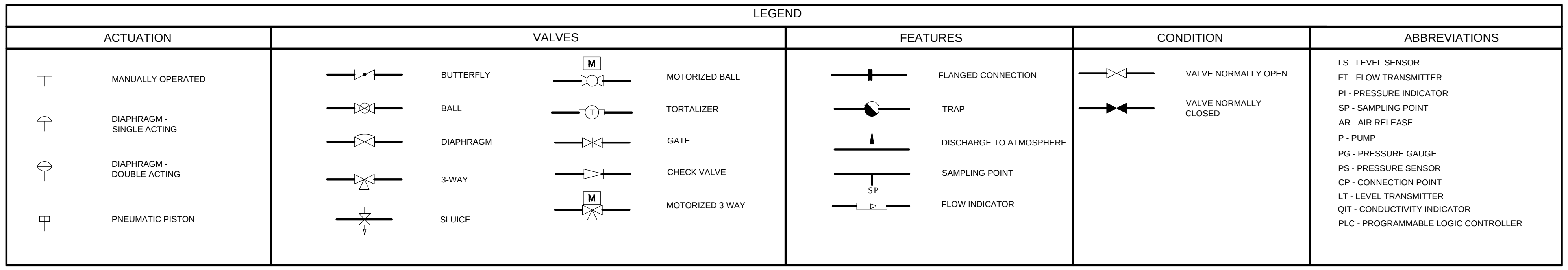
LEGEND
ACTUATION
MANUALLY OPERATED
DIAPHRAGM - SINGLE ACTING
DIAPHRAGM - DOUBLE ACTING
PNEUMATIC PISTON
VALVES
BUTTERFLY
BALL
DIAPHRAGM
3-WAY
SLUICE
M
MOTORIZED BALL
T
TORTALIZER
GATE
CHECK VALVE
M
MOTORIZED 3 WAY
FEATURES
FLANGED CONNECTION
TRAP
DISCHARGE TO ATMOSPHERE
SP
SAMPLING POINT
FLOW INDICATOR
CONDITION
VALVE NORMALLY OPEN
VALVE NORMALLY CLOSED
ABBREVIATIONS

LS - LEVEL SENSOR
FT - FLOW TRANSMITTER
PI - PRESSURE INDICATOR
SP - SAMPLING POINT
AR - AIR RELEASE
P - PUMP
PG - PRESSURE GAUGE
PS - PRESSURE SENSOR
CP - CONNECTION POINT
LT - LEVEL TRANSMITTER
QIT - CONDUCTIVITY INDICATOR
PLC - PROGRAMMABLE LOGIC CONTROLLER

IWRM PLANT P&I DETAIL A

NTS

Legend

Note:
- Borehole pumps to be controlled by Variable Frequency Drive (VFD)

REV. NO.	Date	Revision Description	Drawn	Chkd	Appd.

Title:
Consultancy Services for Survey, Design and EIA works of Water Supply and Sewerage Facilities in 5 islands, Maldives - Package 6

Sub Title:
Water Supply System in L.Kunahandhoo

Client:
Ministry of National Planning, Housing and Infrastructure, Republic of Maldives

T: +960 333 3528
E: info@epoch.associates
W: wwww.epoch.associates
A: G. Rosary West,
Husnuheenaa Magu, Male', Maldives

Making Infrastructure Happen

Drawn: F.I.A.
Checked: M.S.S.
Designed: F.I.A.
Approved: I.W.
Date: Aug 2020
SCALE (A3): 1:20
Project No: EP-WS/2019/06
Rev: R-01
Page: W-06

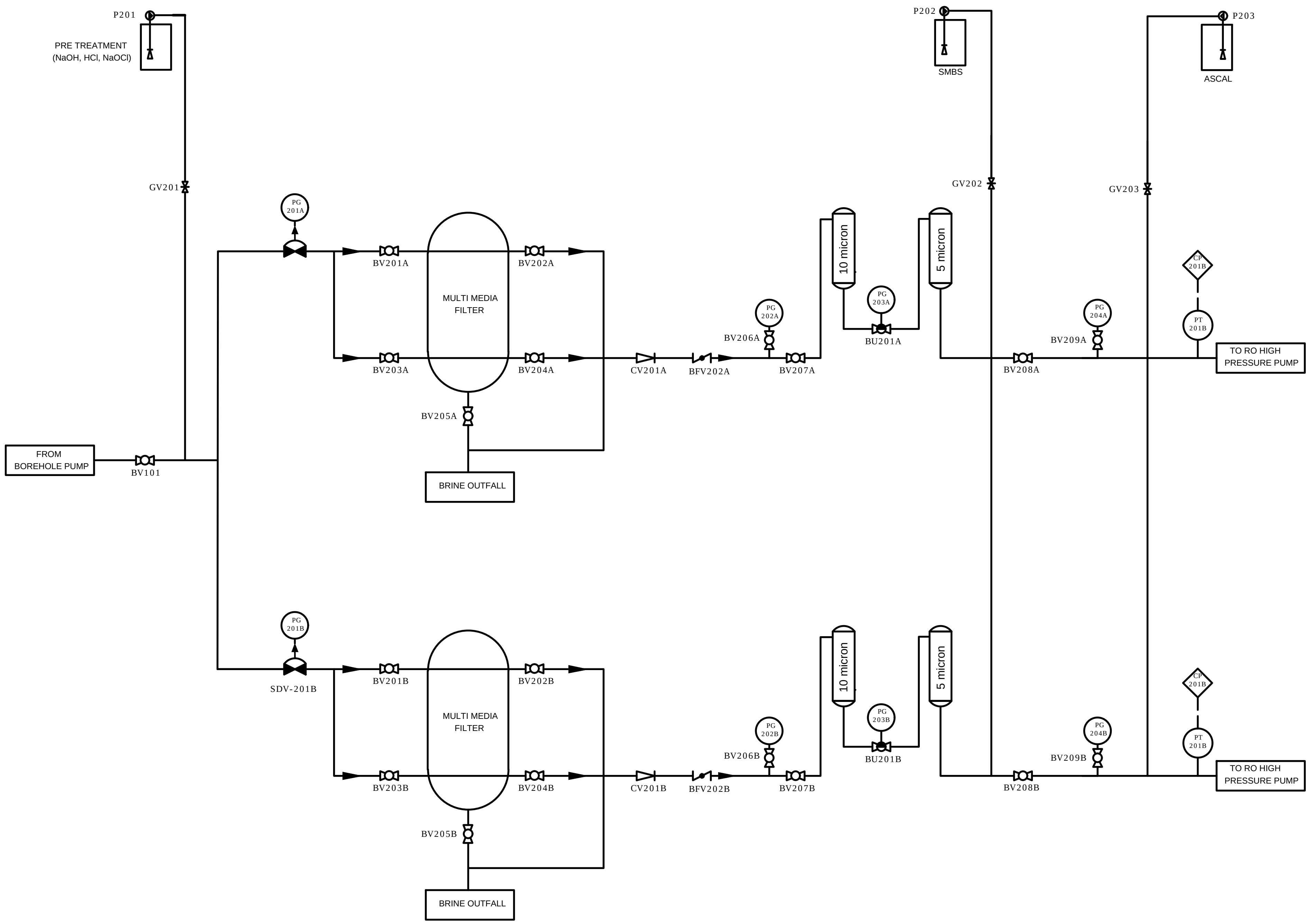
P201
PRE TREATMENT
(NaOH, HCl, NaOCl)
GV201
PG 201A
BV201A
BV202A
MULTI MEDIA FILTER
BV203A
BV204A
BV205A
BRINE OUTFALL
FROM BOREHOLE PUMP
BV101
CV201A
BFV202A
PG 202A
BV206A
BV207A
10 micron
PG 203A
BU201A
P202
SMBS
GV202
5 micron
BV208A
P203
ASCAL
GV203
PG 204A
BV209A
CP 201B
PT 201B
TO RO HIGH PRESSURE PUMP
PG 201B
SDV-201B
BV201B
BV202B
MULTI MEDIA FILTER
BV203B
BV204B
BV205B
BRINE OUTFALL
CV201B
BFV202B
PG 202B
BV206B
BV207B
10 micron
PG 203B
BU201B
5 micron
BV208B
PG 204B
BV209B
CP 201B
PT 201B
TO RO HIGH PRESSURE PUMP

DETAIL B

LEGEND

ACTUATION	VALVES		FEATURES	CONDITION	ABBREVIATIONS
MANUALLY OPERATED	BUTTERFLY	MOTORIZED BALL	FLANGED CONNECTION	VALVE NORMALLY OPEN	LS - LEVEL SENSOR
DIAPHRAGM - SINGLE ACTING	BALL	TORTALIZER	TRAP	VALVE NORMALLY CLOSED	FT - FLOW TRANSMITTER
DIAPHRAGM - DOUBLE ACTING	DIAPHRAGM	GATE	DISCHARGE TO ATMOSPHERE		PI - PRESSURE INDICATOR
PNEUMATIC PISTON	3-WAY	CHECK VALVE	SAMPLING POINT		SP - SAMPLING POINT
	SLUICE	MOTORIZED 3 WAY	FLOW INDICATOR		AR - AIR RELEASE
					P - PUMP
					PG - PRESSURE GAUGE
					PS - PRESSURE SENSOR
					CP - CONNECTION POINT
					LT - LEVEL TRANSMITTER
					QIT - CONDUCTIVITY INDICATOR
					PLC - PROGRAMMABLE LOGIC CONTROLLER

Legend

Note:
- SMBS Pre dosing chemical to be used only if Chlorine based dosing chemical is added prior to filtration.
- Union valve to be connected in between the two cartridge filters.
- MM filters to be controlled manually.

REV. NO.	Date	Revision Description	Drawn	Chkd	Appd.

IWRM PLANT P&I DETAIL B

NTS

Title:
Consultancy Services for Survey, Design and EIA works of Water Supply and Sewerage Facilities in 5 islands, Maldives - Package 6

Sub Title:
Water Supply System in L.Kunahandhoo

Client:
Ministry of National Planning, Housing and Infrastructure, Republic of Maldives

EPOCH ASSOCIATES
T: +960 333 3528
E: info@epoch.associates
W: wwww.epoch.associates
A: G. Rosary West,
Husnuheenaa Magu, Male', Maldives

FEEDBACK INFRA
Making Infrastructure Happen

Drawn:	F.I.A.	Checked:	M.S.S.
Designed:	F.I.A.	Approved:	I.W.
Date:	Aug 2020	SCALE (A3):	1:20

Project No: EP-WS/2019/06

Rev: R-01

Page: W-07

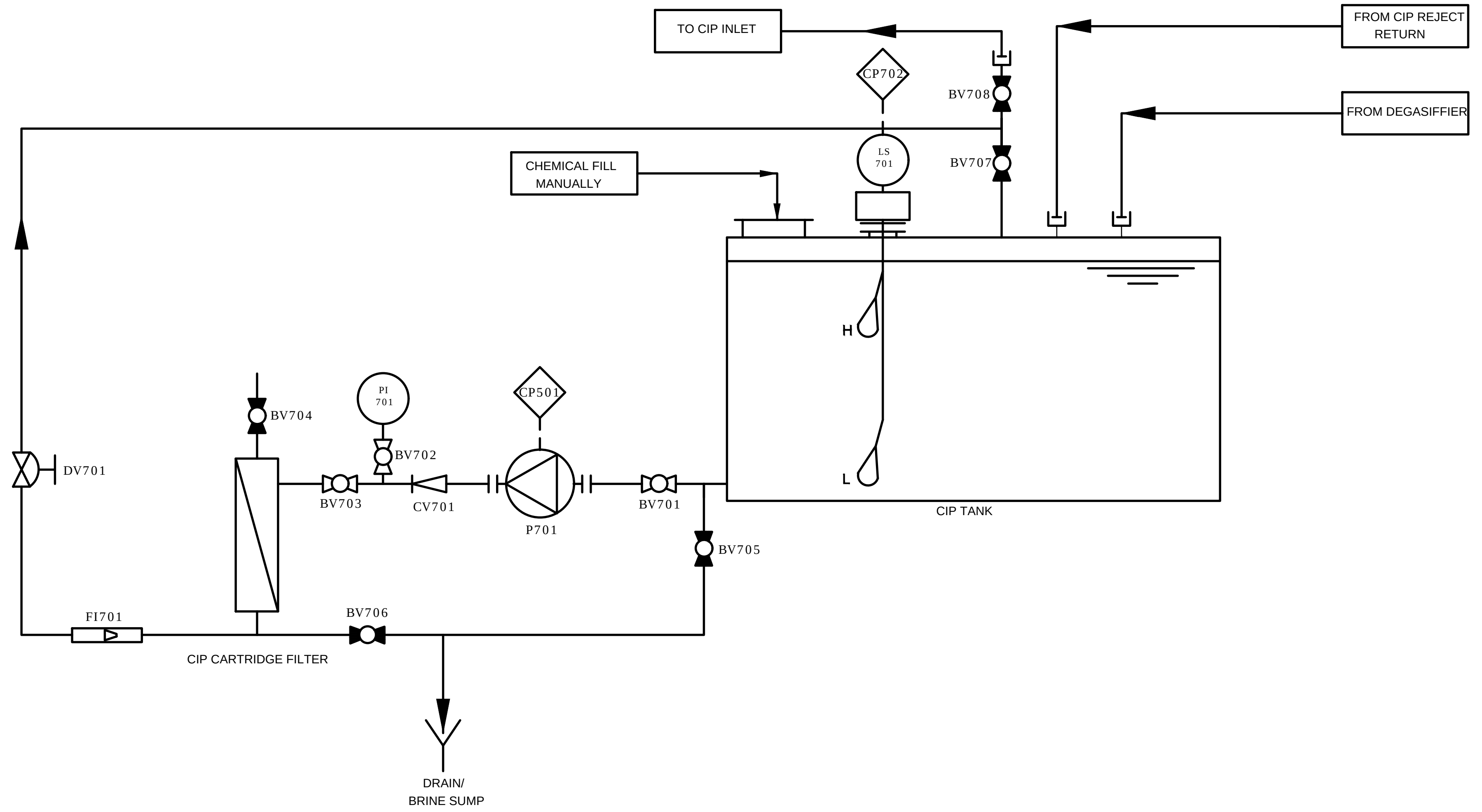
TO CIP INLET
FROM CIP REJECT RETURN
FROM DEGASIFFIER
CP702
BV708
BV707
LS 701
CHEMICAL FILL MANUALLY
H
L
CIP TANK
BV704
PI 701
BV702
CP501
DV701
BV703
CV701
P701
BV701
BV705
FI701
BV706
CIP CARTRIDGE FILTER
DRAIN/
BRINE SUMP

DETAIL C

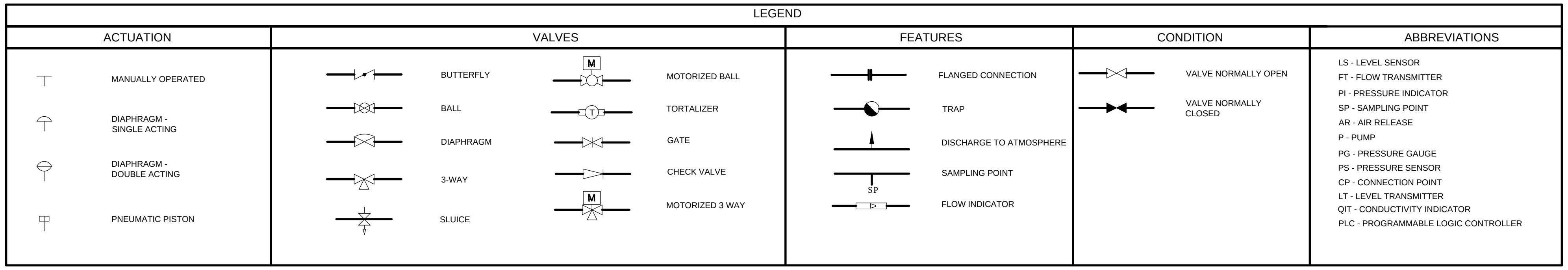
LEGEND
ACTUATION
MANUALLY OPERATED
DIAPHRAGM - SINGLE ACTING
DIAPHRAGM - DOUBLE ACTING
PNEUMATIC PISTON
VALVES
BUTTERFLY
BALL
DIAPHRAGM
3-WAY
SLUICE
M
MOTORIZED BALL
T
TORTALIZER
GATE
CHECK VALVE
M
MOTORIZED 3 WAY
FEATURES
FLANGED CONNECTION
TRAP
DISCHARGE TO ATMOSPHERE
SP
SAMPLING POINT
FLOW INDICATOR
CONDITION
VALVE NORMALLY OPEN
VALVE NORMALLY CLOSED
ABBREVIATIONS
LS - LEVEL SENSOR
FT - FLOW TRANSMITTER
PI - PRESSURE INDICATOR
SP - SAMPLING POINT
AR - AIR RELEASE
P - PUMP
PG - PRESSURE GAUGE
PS - PRESSURE SENSOR
CP - CONNECTION POINT
LT - LEVEL TRANSMITTER
QIT - CONDUCTIVITY INDICATOR
PLC - PROGRAMMABLE LOGIC CONTROLLER

IWRM PLANT P&I DETAIL C

NTS

Legend

Note:
- Flexible hose VIC connection to be used for during CIP use and flushing.

REV. NO.	Date	Revision Description	Drawn	Chkd	Appd.

Title:
Consultancy Services for Survey, Design and EIA works of Water Supply and Sewerage Facilities in 5 islands, Maldives - Package 6

Sub Title:
Water Supply System in L.Kunahandhoo

Client:
Ministry of National Planning, Housing and Infrastructure, Republic of Maldives

EPOCH ASSOCIATES
T: +960 333 3528
E: info@epoch.associates
W: wwww.epoch.associates
A: G. Rosary West,
Husnuheenaa Magu, Male', Maldives

FEEDBACK INFRA
Making Infrastructure Happen

Drawn: F.I.A.
Checked: M.S.S.
Designed: F.I.A.
Approved: I.W.
Date: Aug 2020
SCALE (A3): 1:20
Project No: EP-WS/2019/06
Rev: R-01
Page: W-08

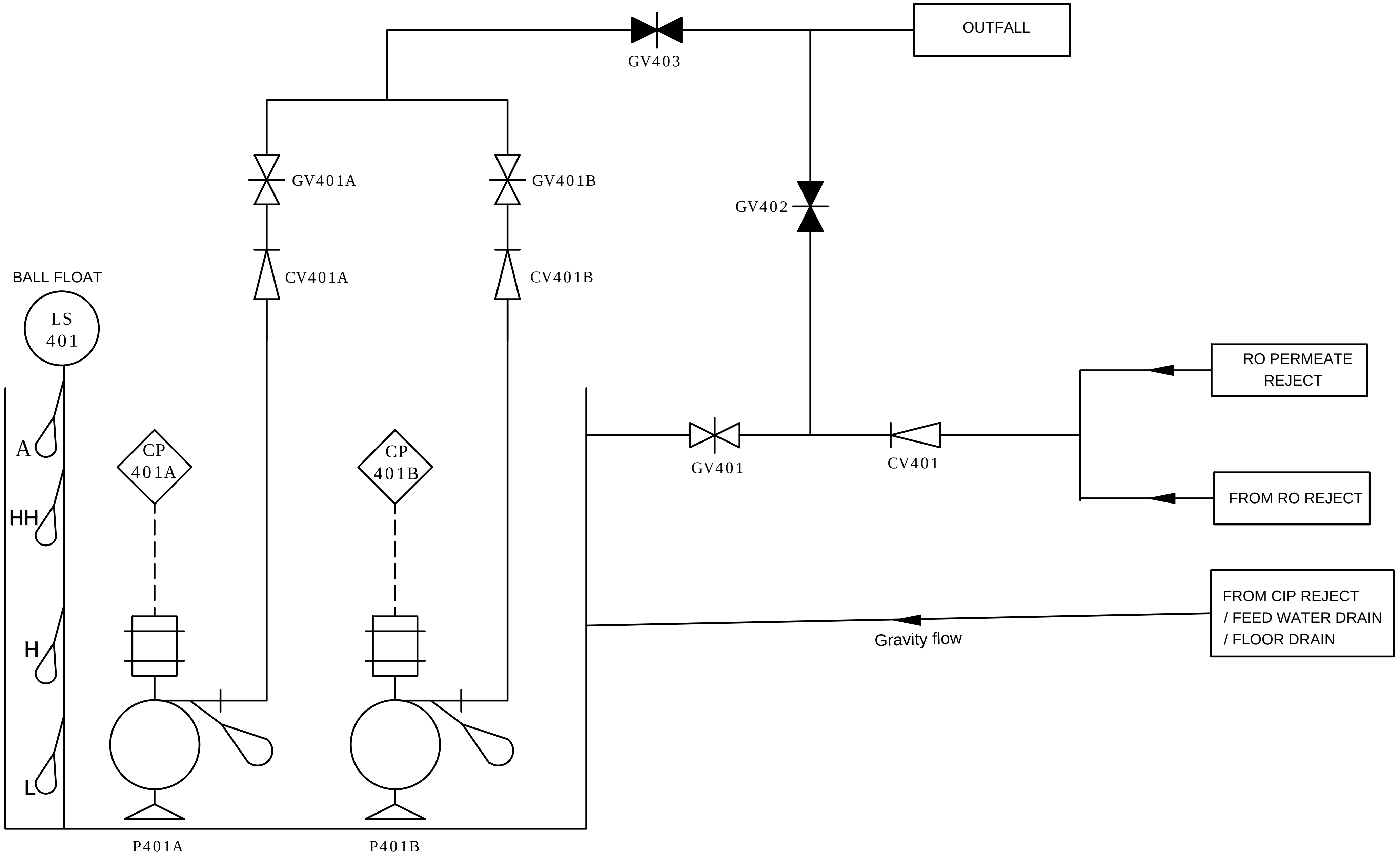
OUTFALL
GV403
GV401A
GV401B
GV402
CV401A
CV401B
BALL FLOAT
LS
401
A
HH
H
L
CP
401A
CP
401B
RO PERMEATE
REJECT
GV401
CV401
FROM RO REJECT
FROM CIP REJECT
/ FEED WATER DRAIN
/ FLOOR DRAIN
Gravity flow
P401A
P401B

BRINE BALANCE SUMPS

DETAIL D

LEGEND

ACTUATION

- MANUALLY OPERATED
- DIAPHRAGM - SINGLE ACTING
- DIAPHRAGM - DOUBLE ACTING
- PNEUMATIC PISTON

VALVES

- BUTTERFLY
- BALL
- DIAPHRAGM
- 3-WAY
- SLUICE
- MOTORIZED BALL
- TORTALIZER
- GATE
- CHECK VALVE
- MOTORIZED 3 WAY

FEATURES

- FLANGED CONNECTION
- TRAP
- DISCHARGE TO ATMOSPHERE
- SAMPLING POINT
- FLOW INDICATOR

CONDITION

- VALVE NORMALLY OPEN
- VALVE NORMALLY CLOSED

ABBREVIATIONS

LS - LEVEL SENSOR
FT - FLOW TRANSMITTER
PI - PRESSURE INDICATOR
SP - SAMPLING POINT
AR - AIR RELEASE
P - PUMP
PG - PRESSURE GAUGE
PS - PRESSURE SENSOR
CP - CONNECTION POINT
LT - LEVEL TRANSMITTER
QIT - CONDUCTIVITY INDICATOR
PLC - PROGRAMMABLE LOGIC CONTROLLER

IWRM PLANT P&I DETAIL D

NTS

Legend

Note:

- Separate pipeline to be laid out connecting the drain points around the plant area, CIP reject and feed water drain.
- Either Dry mount of submersible pumps to be used.

REV. NO.	Date	Revision Description	Drawn	Chkd	Appd.

Title:
Consultancy Services for Survey, Design and EIA works of Water Supply and Sewerage Facilities in 5 islands, Maldives - Package 6

Sub Title:
Water Supply System in L.Kunahandhoo

Client:
Ministry of National Planning, Housing and Infrastructure, Republic of Maldives

EPOCH ASSOCIATES
T: +960 333 3528
E: info@epoch.associates
W: wwww.epoch.associates
A: G. Rosary West,
Husnuheenaa Magu, Male', Maldives

FEEDBACK INFRA
Making Infrastructure Happen

Drawn: F.I.A.
Checked: M.S.S.
Designed: F.I.A.
Approved: I.W.
Date: Aug 2020
SCALE (A3): 1:20
Project No: EP-WS/2019/06
Rev: R-01
Page: W-09

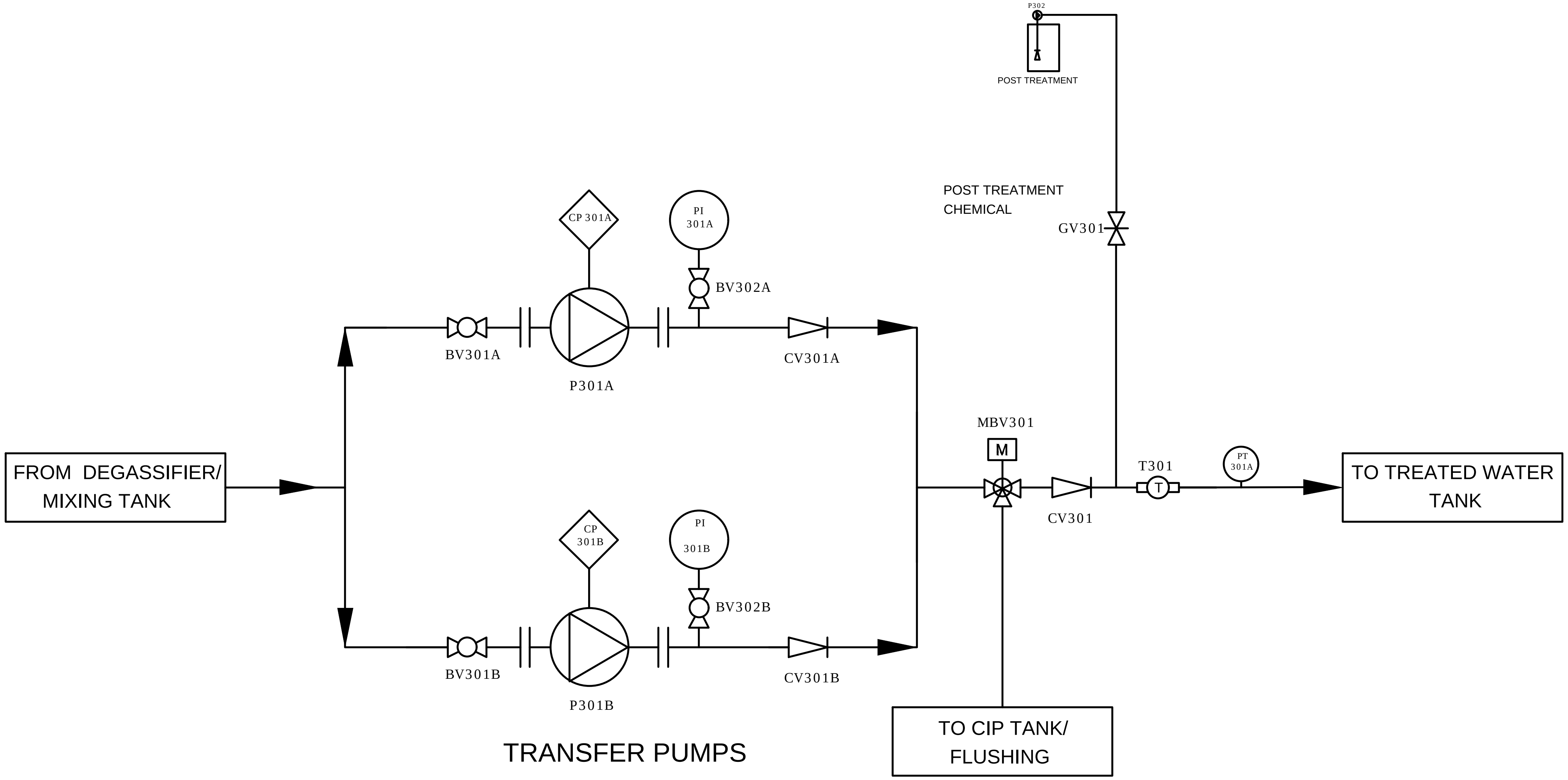
P302
POST TREATMENT
POST TREATMENT
CHEMICAL
GV301
CP 301A
PI
301A
BV302A
BV301A
P301A
CV301A
MBV301
M
T301
T
PT
301A
CV301
FROM DEGASSIFIER/
MIXING TANK
TO TREATED WATER
TANK
CP
301B
PI
301B
BV302B
BV301B
P301B
CV301B
TO CIP TANK/
FLUSHING
TRANSFER PUMPS

DETAIL E

LEGEND

ACTUATION	VALVES		FEATURES	CONDITION	ABBREVIATIONS
MANUALLY OPERATED	BUTTERFLY	MOTORIZED BALL	FLANGED CONNECTION	VALVE NORMALLY OPEN	LS - LEVEL SENSOR
DIAPHRAGM - SINGLE ACTING	BALL	TORTALIZER	TRAP	VALVE NORMALLY CLOSED	FT - FLOW TRANSMITTER
DIAPHRAGM - DOUBLE ACTING	DIAPHRAGM	GATE	DISCHARGE TO ATMOSPHERE		PI - PRESSURE INDICATOR
PNEUMATIC PISTON	3-WAY	CHECK VALVE	SAMPLING POINT SP		SP - SAMPLING POINT
	SLUICE	MOTORIZED 3 WAY	FLOW INDICATOR		AR - AIR RELEASE
					P - PUMP
					PG - PRESSURE GAUGE
					PS - PRESSURE SENSOR
					CP - CONNECTION POINT
					LT - LEVEL TRANSMITTER
					QIT - CONDUCTIVITY INDICATOR
					PLC - PROGRAMMABLE LOGIC CONTROLLER

IWRM PLANT P&I DETAIL E

NTS

Legend

REV. NO.	Date	Revision Description	Drawn	Chkd	Appd.

Title:
Consultancy Services for Survey, Design and EIA works of Water Supply and Sewerage Facilities in 5 islands, Maldives - Package 6

Sub Title:
Water Supply System in L.Kunahandhoo

Client:
Ministry of National Planning, Housing and Infrastructure, Republic of Maldives

EPOCH ASSOCIATES
T: +960 333 3528
E: info@epoch.associates
W: wwww.epoch.associates
A: G. Rosary West,
Husnuheenaa Magu, Male', Maldives

FEEDBACK INFRA
Making Infrastructure Happen

Drawn:	F.I.A.	Checked:	M.S.S.
Designed:	F.I.A.	Approved:	I.W.
Date:	Aug 2020	SCALE (A3):	1:20
Project No:	EP-WS/2019/06		
Rev:	R-01	Page:	W-10

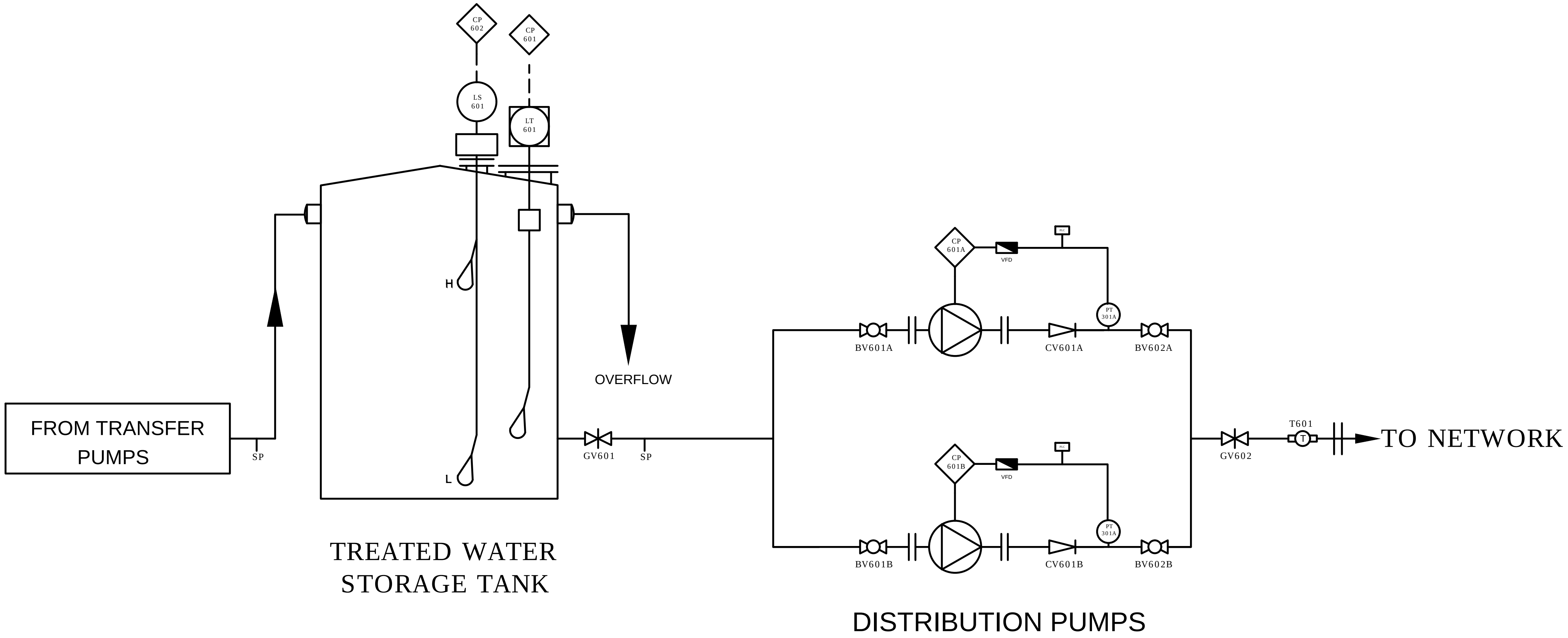
CP 602
CP 601
LS 601
LT 601
H
L
FROM TRANSFER PUMPS
SP
GV601
SP
OVERFLOW
TREATED WATER STORAGE TANK
CP 601A
VFD
PLC
PT 301A
BV601A
CV601A
BV602A
CP 601B
VFD
PLC
PT 301A
BV601B
CV601B
BV602B
GV602
T601
T
TO NETWORK
DISTRIBUTION PUMPS

DETAIL F

LEGEND

ACTUATION	VALVES	VALVES	FEATURES	CONDITION
MANUALLY OPERATED	BUTTERFLY	MOTORIZED BALL	FLANGED CONNECTION	VALVE NORMALLY OPEN
DIAPHRAGM - SINGLE ACTING	BALL	TORTALIZER	TRAP	VALVE NORMALLY CLOSED
DIAPHRAGM - DOUBLE ACTING	DIAPHRAGM	GATE	DISCHARGE TO ATMOSPHERE	
PNEUMATIC PISTON	3-WAY	CHECK VALVE	SAMPLING POINT (SP)	
	SLUICE	MOTORIZED 3 WAY	FLOW INDICATOR	

ABBREVIATIONS

LS - LEVEL SENSOR
FT - FLOW TRANSMITTER
PI - PRESSURE INDICATOR
SP - SAMPLING POINT
AR - AIR RELEASE
P - PUMP
PG - PRESSURE GAUGE
PS - PRESSURE SENSOR
CP - CONNECTION POINT
LT - LEVEL TRANSMITTER
QIT - CONDUCTIVITY INDICATOR
PLC - PROGRAMMABLE LOGIC CONTROLLER

IWRM PLANT P&I DETAIL F
NTS

N

Legend

REV. NO.	Date	Revision Description	Drawn	Chkd	Appd.

Title:
Consultancy Services for Survey, Design and EIA works of Water Supply and Sewerage Facilities in 5 islands, Maldives - Package 6

Sub Title:
Water Supply System in L.Kunahandhoo

Client:
Ministry of National Planning, Housing and Infrastructure, Republic of Maldives

EPOCH ASSOCIATES

T: +960 333 3528
E: info@epoch.associates
W: wwww.epoch.associates
A: G. Rosary West,
Husnuheenaa Magu, Male', Maldives

FEEDBACK INFRA
Making Infrastructure Happen

Drawn:	F.I.A.	Checked:	M.S.S.
Designed:	F.I.A.	Approved:	I.W.
Date:	Aug 2020	SCALE (A3):	1:20
Project No:	EP-WS/2019/06		
Rev:	R-01	Page:	W-11

UV DISINFECTION

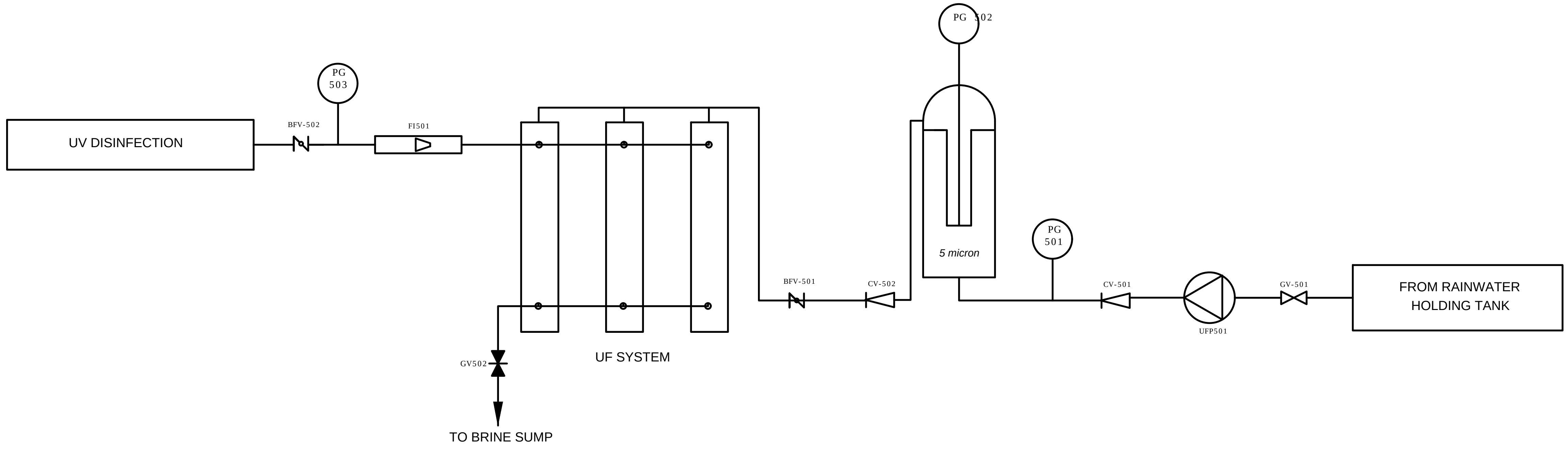
PG 502
PG 503
BFV-502
FI501
UV DISINFECTION
UF SYSTEM
GV502
TO BRINE SUMP
BFV-501
CV-502
5 micron
PG 501
CV-501
UFP501
GV-501
FROM RAINWATER HOLDING TANK

DETAIL G

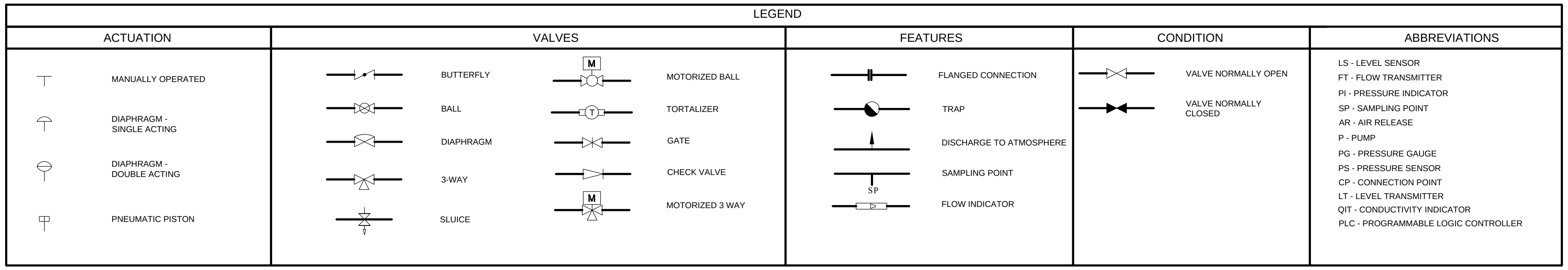

LEGEND

ACTUATION	VALVES		FEATURES	CONDITION	ABBREVIATIONS
MANUALLY OPERATED	BUTTERFLY	MOTORIZED BALL	FLANGED CONNECTION	VALVE NORMALLY OPEN	LS - LEVEL SENSOR FT - FLOW TRANSMITTER PI - PRESSURE INDICATOR SP - SAMPLING POINT AR - AIR RELEASE P - PUMP PG - PRESSURE GAUGE PS - PRESSURE SENSOR CP - CONNECTION POINT LT - LEVEL TRANSMITTER QIT - CONDUCTIVITY INDICATOR PLC - PROGRAMMABLE LOGIC CONTROLLER
DIAPHRAGM - SINGLE ACTING	BALL	TORTALIZER	TRAP	VALVE NORMALLY CLOSED	
DIAPHRAGM - DOUBLE ACTING	DIAPHRAGM	GATE	DISCHARGE TO ATMOSPHERE		
	3-WAY	CHECK VALVE	SAMPLING POINT (SP)		
PNEUMATIC PISTON	SLUICE	MOTORIZED 3 WAY	FLOW INDICATOR		

Legend

REV. NO.	Date	Revision Description	Drawn	Chkd	Appd.

IWRM PLANT P&I DETAIL G

NTS

Title:
Consultancy Services for Survey, Design and EIA works of Water Supply and Sewerage Facilities in 5 islands, Maldives - Package 6

Sub Title:
Water Supply System in L.Kunahandhoo

Client:
Ministry of National Planning, Housing and Infrastructure, Republic of Maldives

EPOCH ASSOCIATES
T: +960 333 3528
E: info@epoch.associates
W: wwww.epoch.associates
A: G. Rosary West,
Husnuheenaa Magu, Male', Maldives

FEEDBACK INFRA
Making Infrastructure Happen

Drawn: F.I.A.
Checked: M.S.S.
Designed: F.I.A.
Approved: I.W.
Date: Aug 2020
SCALE (A3): 1:20
Project No: EP-WS/2019/06
Rev: R-01
Page: W-12

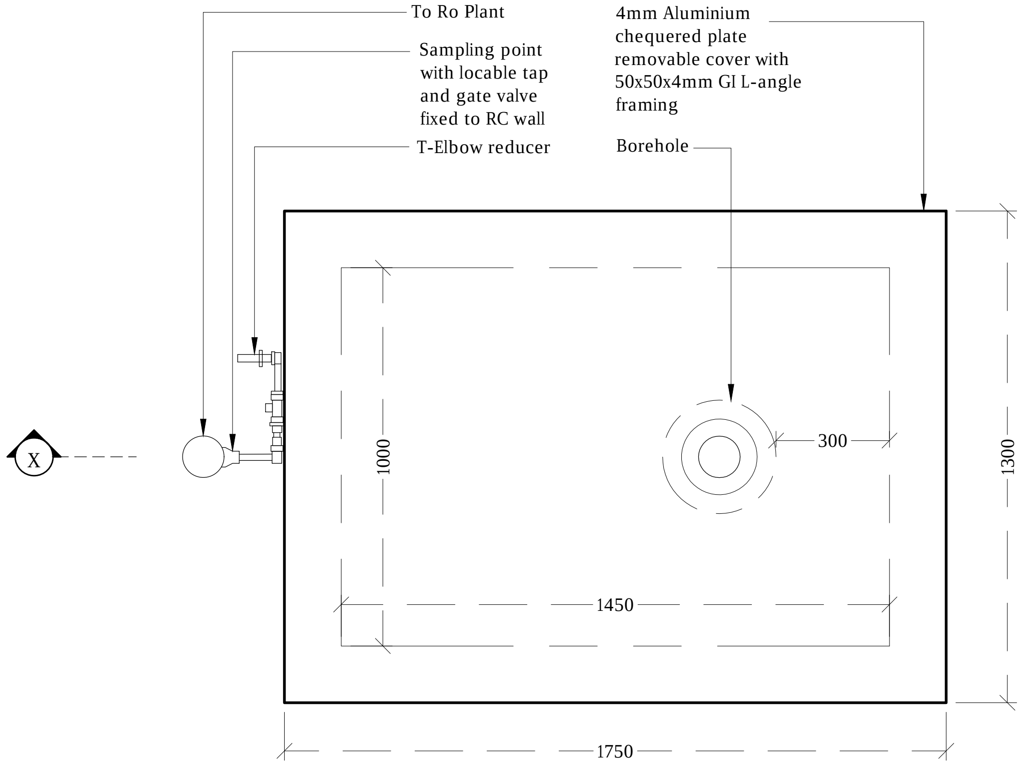
To Ro Plant
Sampling point with locable tap and gate valve fixed to RC wall
T-Elbow reducer
4mm Aluminium chequered plate removable cover with 50x50x4mm GI L-angle framing
Borehole
300
1000
1300
1450
1750
X
X

PLAN

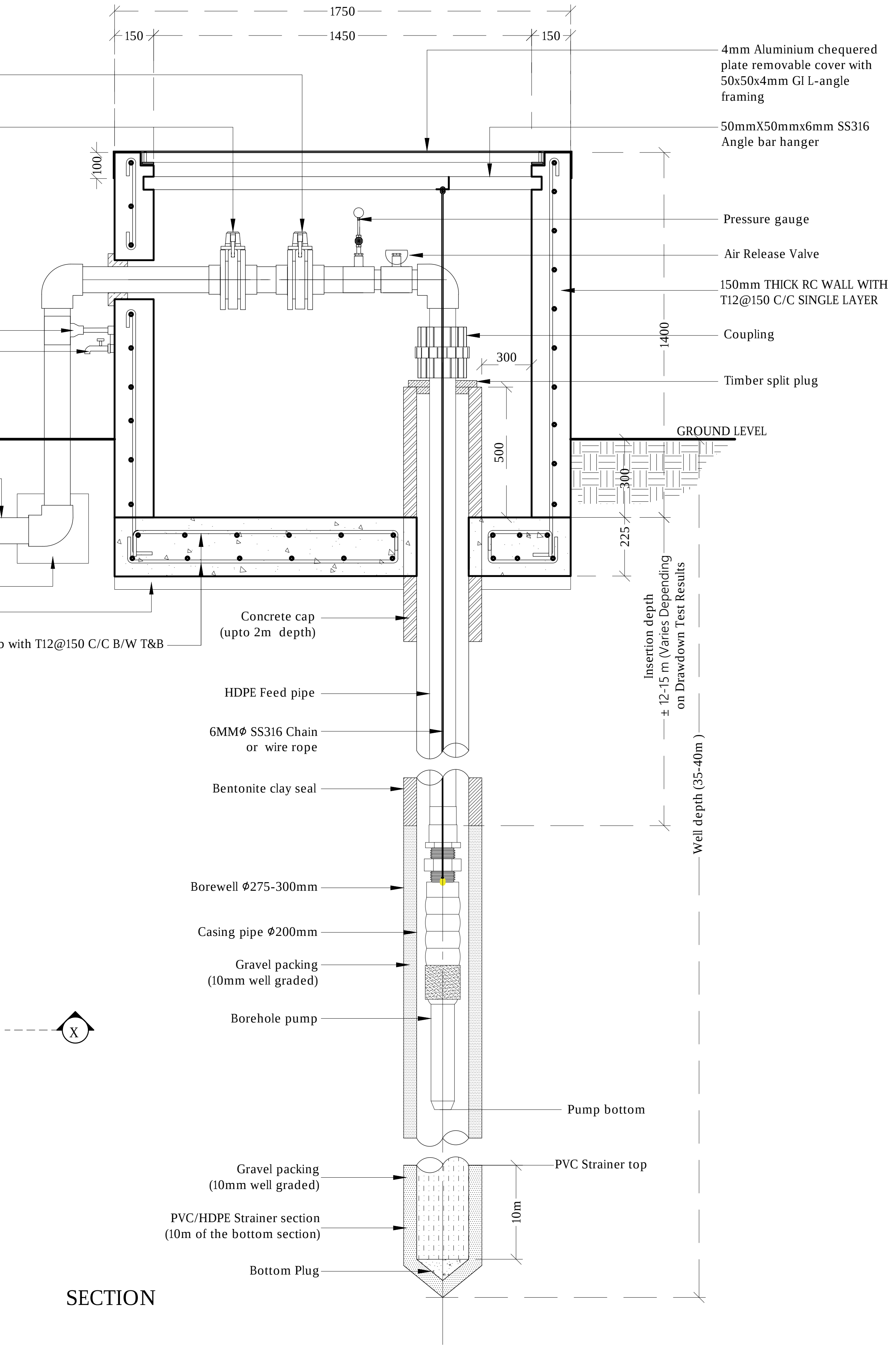
1750
150
1450
150
Non-return valve
Gate valve
4mm Aluminium chequered plate removable cover with 50x50x4mm GI L-angle framing
50mmX50mmx6mm SS316 Angle bar hanger
100
Pressure gauge
Air Release Valve
150mm THICK RC WALL WITH T12@150 C/C SINGLE LAYER
T-Elbow reducer
Sampling point with locable tap and gate valve fixed to RC wall
1400
Coupling
300
Timber split plug
GROUND LEVEL
500
300
225
To Ro Plant
Thrust block
50mm Lean
200mm thick RC slab with T12@150 C/C B/W T&B
Concrete cap (upto 2m depth)
Insertion depth ± 12-15 m (Varies Depending on Drawdown Test Results
Well depth (35-40m)
HDPE Feed pipe
6MMΦ SS316 Chain or wire rope
Bentonite clay seal
Borewell Φ275-300mm
Casing pipe Φ200mm
Gravel packing (10mm well graded)
Borehole pump
Pump bottom
Gravel packing (10mm well graded)
PVC Strainer top
10m
PVC/HDPE Strainer section (10m of the bottom section)
Bottom Plug

SECTION

BOREHOLE DETAILS

NTS

Legend

Notes:
-All structural concrete shall be of grade C30.
-All castings shall be done using sulphate resistant portland cement to BS 4027:1996.
-All structural reinforcement shall be epoxy coating of non-pre-stressed reinforcement to ASTM-A775/A775M.
-A cover of 75mm should be given for all reinforcements.
- All concrete cold joints shall casted with bonding agent
-Casing pipe to be HDPE or PVC with a diameter of 200mm.
-Contractor to submit well development methodology for approval by engineer.
-Contractor to submit drill logs.
-Contractor to submit drawdown test results for approval by engineer prior to pipe insertion.

REV. NO.	Date	Revision Description	Drawn	Chkd	Appd.

Title:
Consultancy Services for Survey, Design and EIA works of Water Supply and Sewerage Facilities in 5 islands, Maldives - Package 6

Sub Title:
Water Supply System in L.Kunahandhoo

Client:
Ministry of National Planning, Housing and Infrastructure, Republic of Maldives

T: +960 333 3528
E: info@epoch.associates
W: wwww.epoch.associates
A: G. Rosary West,
Husnuheenaa Magu, Male', Maldives

Drawn: F.I.A.
Checked: M.S.S.
Designed: F.I.A.
Approved: I.W.
Date: Aug 2020
SCALE (A3): NTS
Project No: EP-WS/2019/06
Rev: R-01
Page: W-13

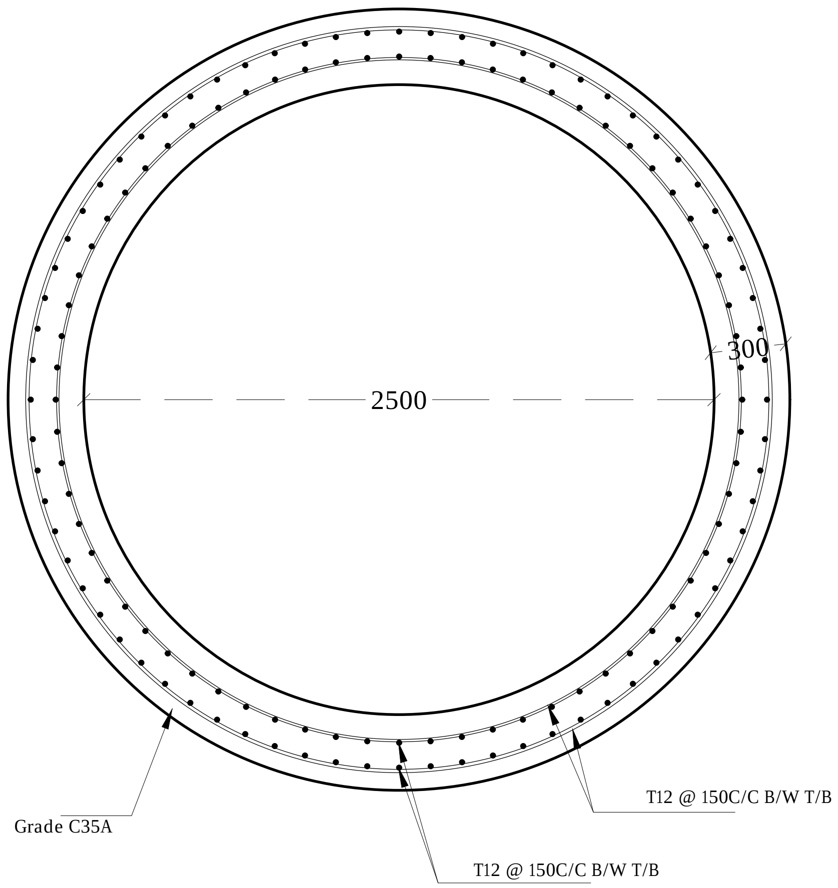
2500
300
Grade C35A
T12 @ 150C/C B/W T/B
T12 @ 150C/C B/W T/B

BRINE WATER TANK PLAN - STRUCTURAL

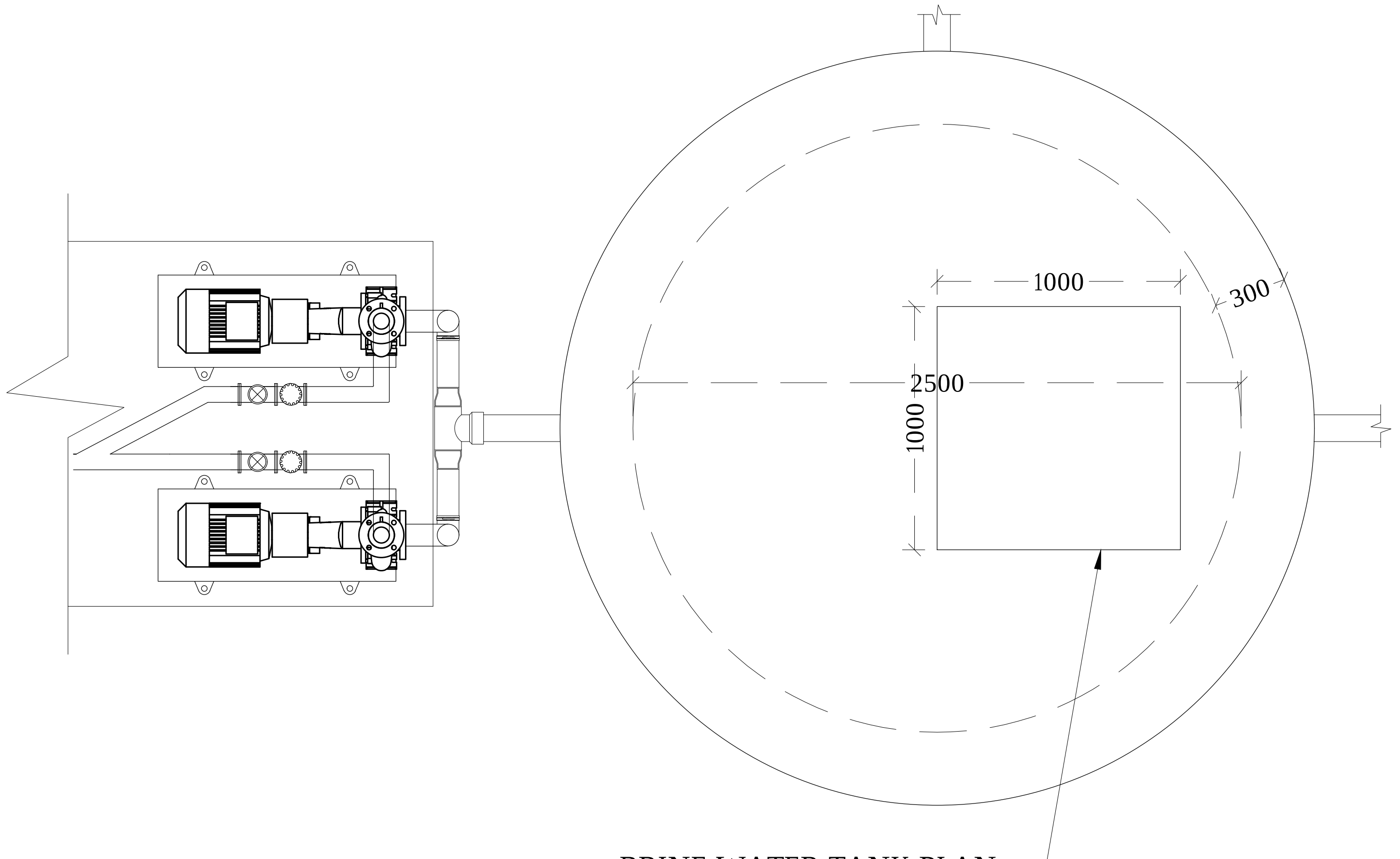
1000
300
2500
1000

BRINE WATER TANK PLAN

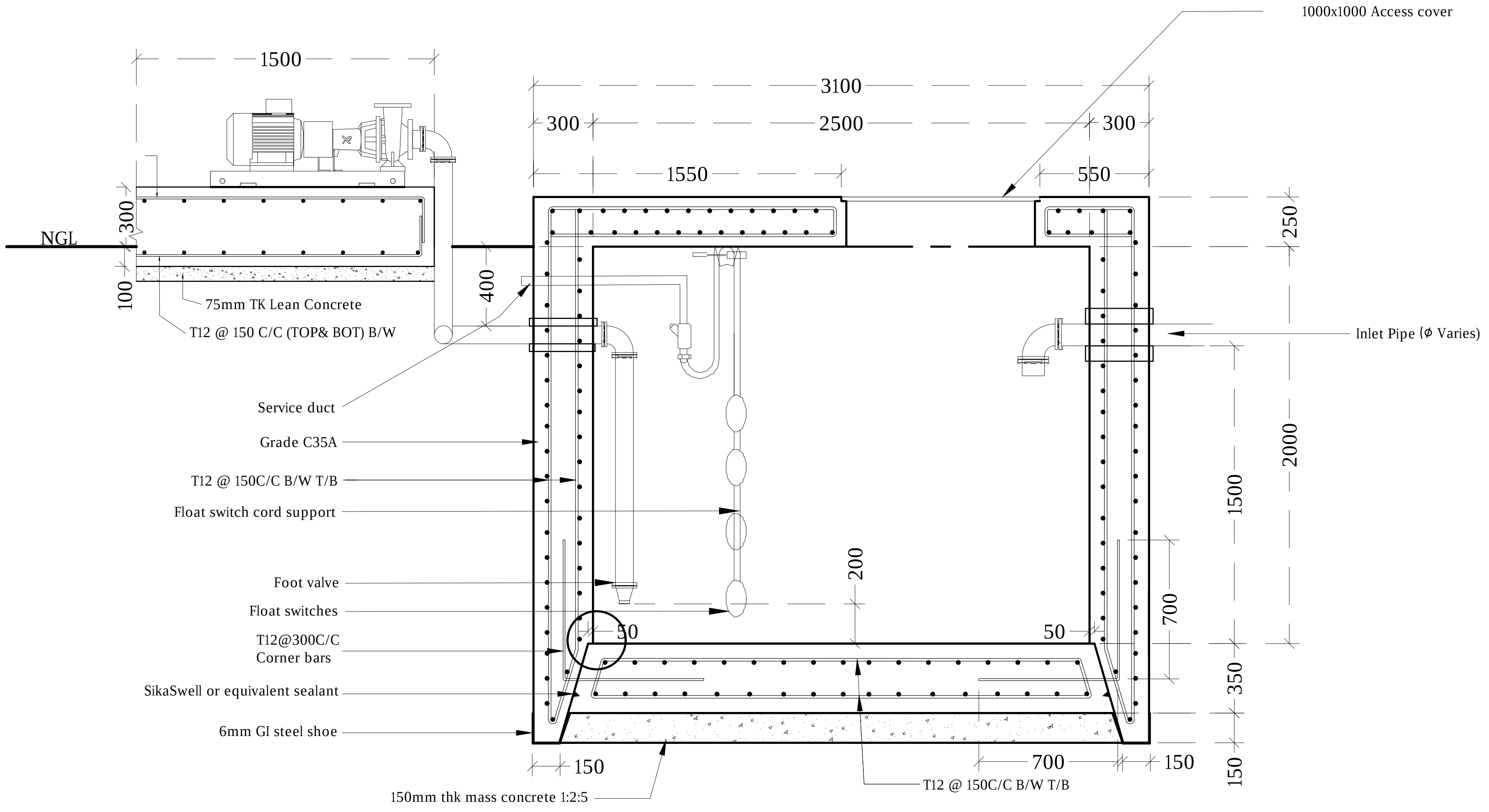
1000x1000 Access cover
1500
3100
300
2500
300
1550
550
250
NGL
300
100
400
75mm TK Lean Concrete
T12 @ 150 C/C (TOP& BOT) B/W
Inlet Pipe (Ø Varies)
Service duct
Grade C35A
T12 @ 150C/C B/W T/B
Float switch cord support
2000
1500
200
700
Foot valve
Float switches
T12@300C/C
Corner bars
50
50
350
SikaSwell or equivalent sealant
6mm GI steel shoe
150
700
150
150
T12 @ 150C/C B/W T/B
150mm thk mass concrete 1:2:5

BRINE WATER TANK SECTION X-X

BRINE TANK DETAILS

1:30

Legend

Note:
-Pumps, pipe work, fittings and control panel shall be installed in accordance with manufacturers recommendations.
-Orientation of tanks and pipe work to suit location.
-All structural concrete shall be of grade C35A.
-All castings shall be done using sulphate resistant portland cement to BS 4027:1996.
-All structural reinforcement shall be epoxy coating of non-pre-stressed reinforcement to ASTM-A775/A775M.
-A cover of 75mm should be given for all reinforcements.
-Internal concrete surfaces to be coated with 5mm thickness of epoxy bonded glass fibre and finished with gel coat or 500 microns epoxy paint coating.
-External concrete surfaces to be painted with 3 coats of bitumen/rubber emulsion and protected by 500 micron polyethene.
- All concrete cold joints shall casted with bonding agent.
- Corner bars (4T16@75C/C T&B) shall be provided around top slab opening.

REV. NO.	Date	Revision Description	Drawn	Chkd	Appd.

Title:
Consultancy Services for Survey, Design and EIA works of Water Supply and Sewerage Facilities in 5 islands, Maldives - Package 6

Sub Title:
Water Supply System in L.Kunahandhoo

Client:
Ministry of National Planning, Housing and Infrastructure, Republic of Maldives

EPOCH ASSOCIATES
T: +960 333 3528
E: info@epoch.associates
W: wwww.epoch.associates
A: G. Rosary West,
Husnuheenaa Magu, Male', Maldives

FEEDBACK INFRA
Making Infrastructure Happen

Drawn:	F.I.A.	Checked:	M.S.S.
Designed:	F.I.A.	Approved:	I.W.
Date:	Aug 2020	SCALE (A3):	1:30
Project No:	EP-WS/2019/06		
Rev:	R-01	Page:	W-14

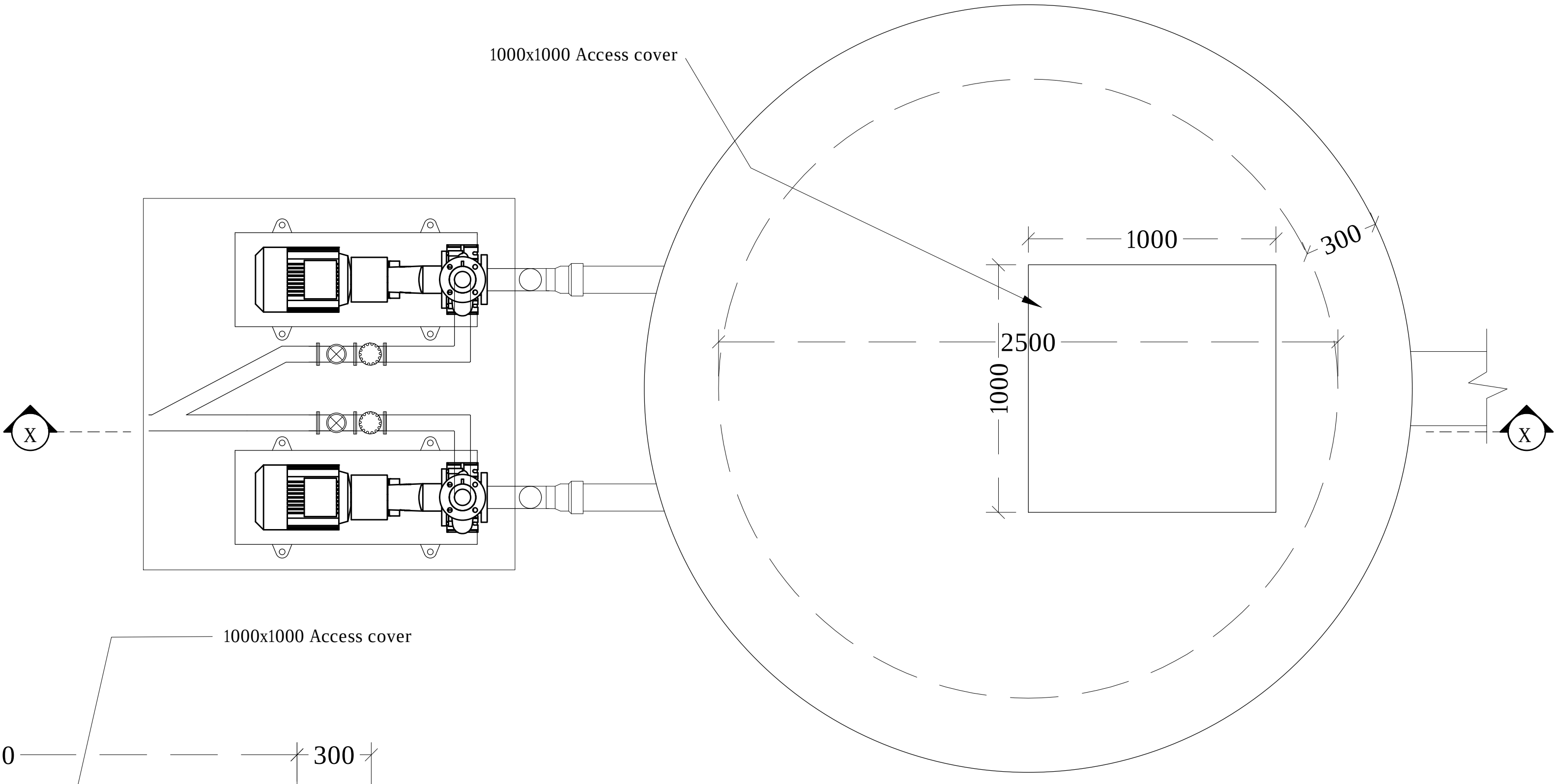
1000x1000 Access cover
1000
300
2500
1000
X
X

RAIN WATER LIFT WELL PLAN

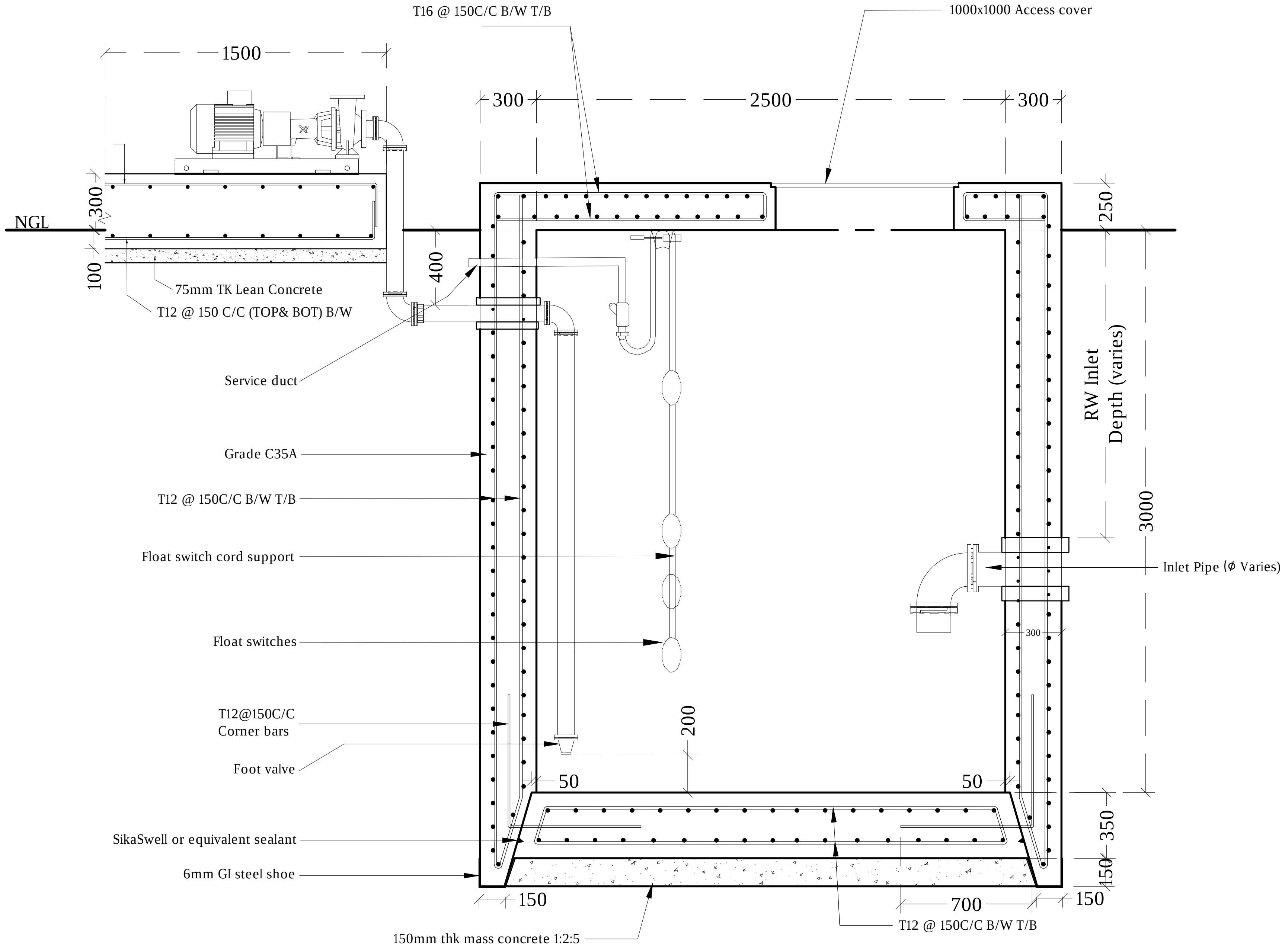
T16 @ 150C/C B/W T/B
1000x1000 Access cover
1500
300
2500
300
NGL
300
100
250
400
75mm TK Lean Concrete
T12 @ 150 C/C (TOP& BOT) B/W
Service duct
Grade C35A
T12 @ 150C/C B/W T/B
Float switch cord support
Float switches
T12@150C/C
Corner bars
Foot valve
SikaSwell or equivalent sealant
6mm GI steel shoe
150mm thk mass concrete 1:2:5
RW Inlet
Depth (varies)
3000
Inlet Pipe (ϕ Varies)
300
200
50
50
350
150
150
700
150
T12 @ 150C/C B/W T/B

RAIN WATER LIFT WELL SECTION X-X

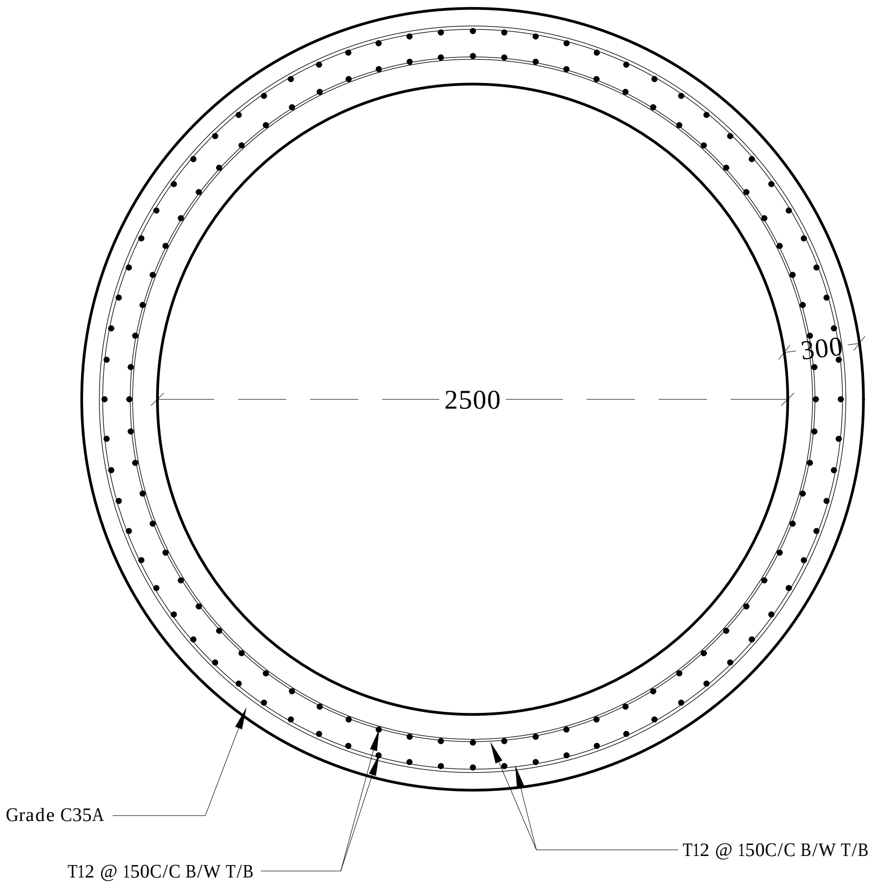
300
2500
Grade C35A
T12 @ 150C/C B/W T/B
T12 @ 150C/C B/W T/B

RAIN WATER LIFT WELL PLAN - STRUCTURAL

RAINWATER LIFT WELL DETAILS

1:30

Legend

Note:
-Pumps, pipe work, fittings and control panel shall be installed in accordance with manufacturers recommendations.
-Orientation of tanks and pipe work to suit location.
-The rainwater lift well will have a filter to prevent entry of debris and dirt.
-All structural concrete shall be of grade C35A.
-All castings shall be done using sulphate resistant portland cement to BS 4027:1996.
-All structural reinforcement shall be epoxy coating of non-pre-stressed reinforcement to ASTM-A775/A775M.
-A cover of 75mm should be given for all reinforcements.
-Internal concrete surfaces to be coated with 5mm thickness of epoxy bonded glass fibre and finished with gel coat or 500 microns epoxy paint coating.
-External concrete surfaces to be painted with 3 coats of bitumen/rubber emulsion and protected by 500 micron polyethene.
- All concrete cold joints shall casted with bonding agent.
- Corner bars (4T16@75C/C T&B) shall be provided around top slab opening.

REV. NO.	Date	Revision Description	Drawn	Chkd	Appd.

Title:
Consultancy Services for Survey, Design and EIA works of Water Supply and Sewerage Facilities in 5 islands, Maldives - Package 6

Sub Title:
Water Supply System in L.Kunahandhoo

Client:
Ministry of National Planning, Housing and Infrastructure, Republic of Maldives

EPOCH ASSOCIATES
T: +960 333 3528
E: info@epoch.associates
W: wwww.epoch.associates
A: G. Rosary West,
Husnuheenaa Magu, Male', Maldives

FEEDBACK INFRA
Making Infrastructure Happen

Drawn: F.I.A.
Checked: M.S.S.
Designed: F.I.A.
Approved: I.W.
Date: Aug 2020
SCALE (A3): 1:30
Project No: EP-WS/2019/06
Rev: R-01
Page: W-15

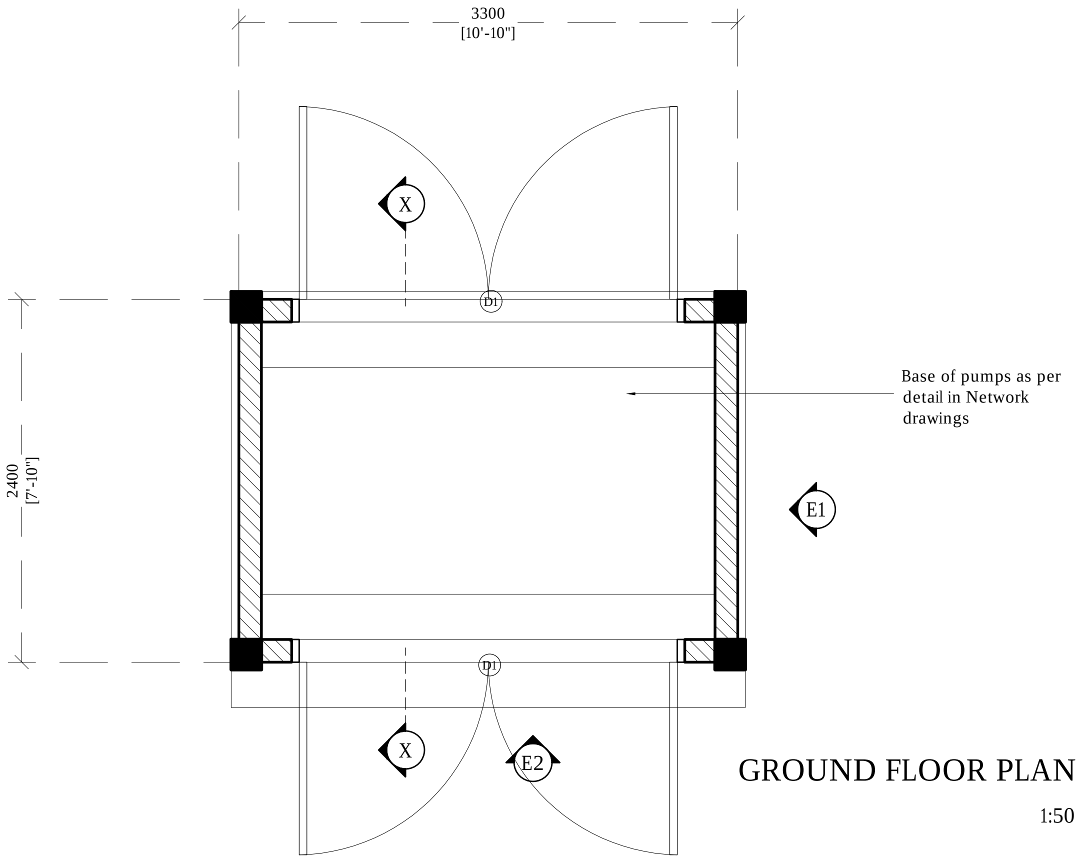
3300
[10'-10"]
2400
[7'-10"]
X
X
D1
D1
E1
E2
Base of pumps as per detail in Network drawings

GROUND FLOOR PLAN

1:50

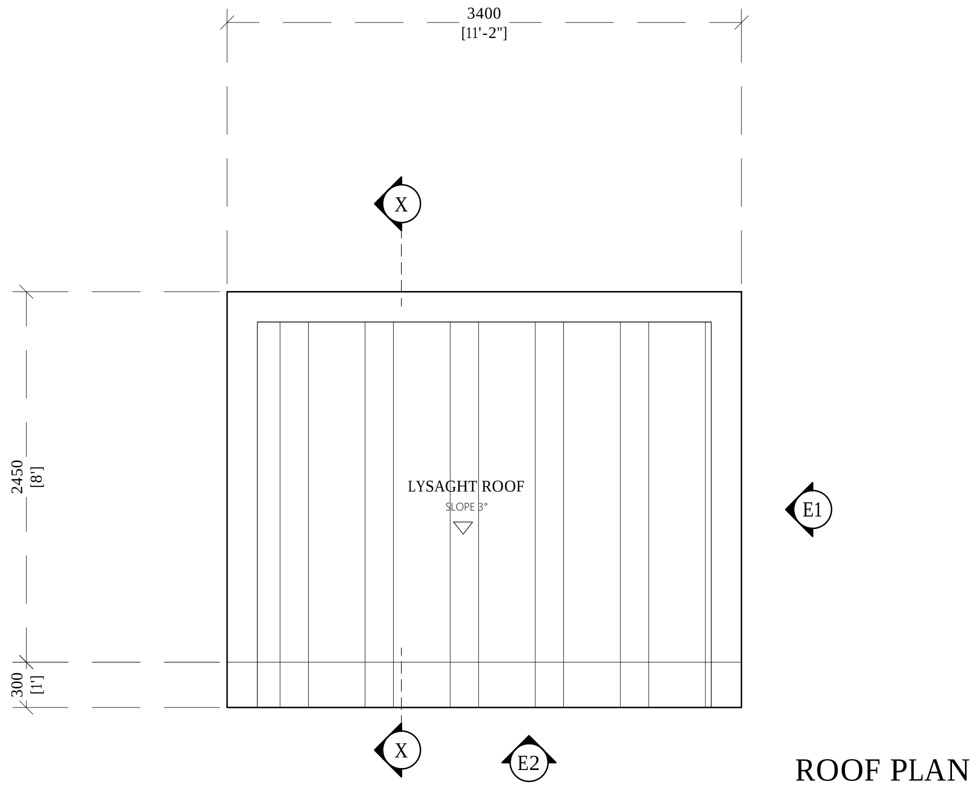
3400
[11'-2"]
2450
[8']
300
[1']
X
X
E1
E2
LYSAGHT ROOF
SLOPE 3°

ROOF PLAN

1:50

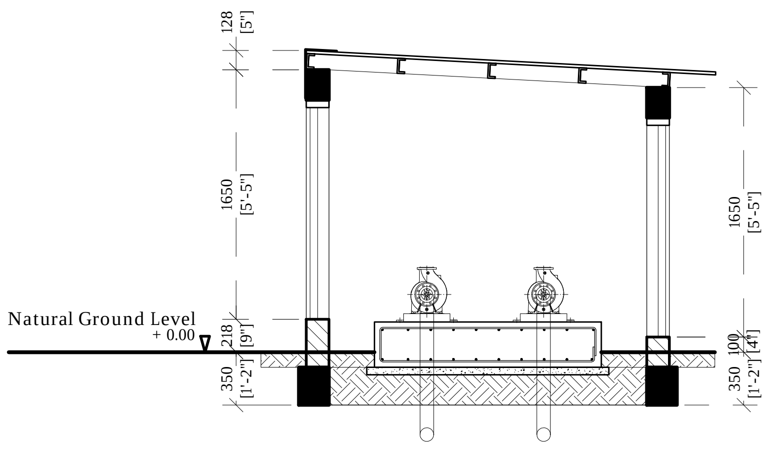
128
[5"]
1650
[5'-5"]
218
[9"]
350
[1'-2"]
Natural Ground Level
+ 0.00
1650
[5'-5"]
100
[4"]
350
[1'-2"]

SECTION X-X

1:50

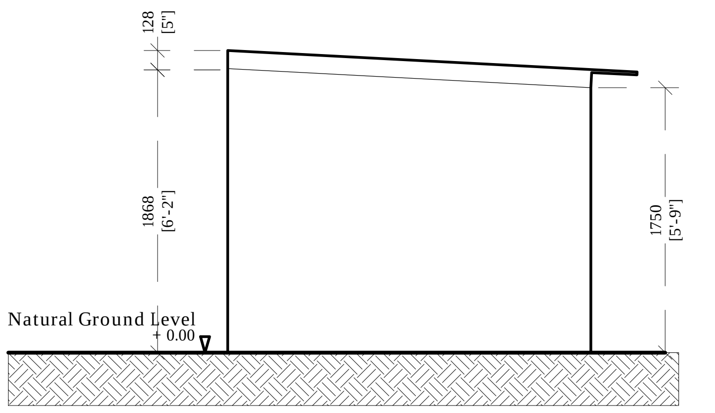
128
[5"]
1868
[6'-2"]
1750
[5'-9"]
Natural Ground Level
+ 0.00

ELEVATION E1

1:100

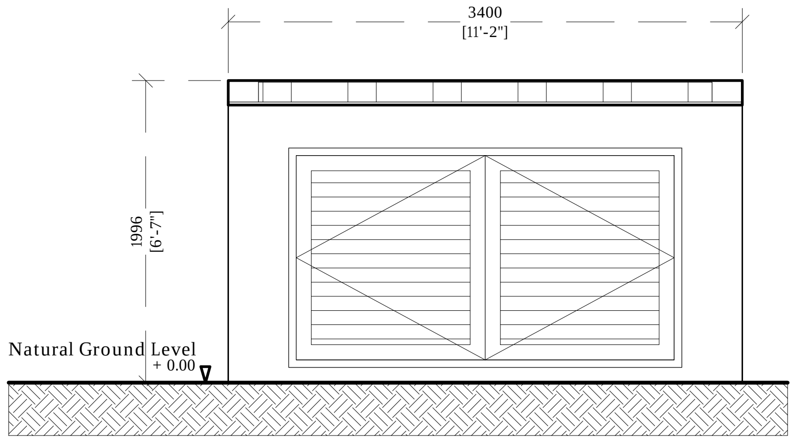
3400
[11'-2"]
1996
[6'-7"]
Natural Ground Level
+ 0.00

ELEVATION E2

1:100

PUMP SHED DETAILS

N

Legend

REV. NO.	Date	Revision Description	Drawn	Chkd	Appd.

Title:
Consultancy Services for Survey, Design and EIA works of Water Supply and Sewerage Facilities in 5 islands, Maldives - Package 6

Sub Title:
Water Supply System in L.Kunahandhoo

Client:
Ministry of National Planning, Housing and Infrastructure, Republic of Maldives

EPOCH ASSOCIATES
T: +960 333 3528
E: info@epoch.associates
W: wwww.epoch.associates
A: G. Rosary West,
Husnuheenaa Magu, Male', Maldives

FEEDBACK INFRA
Making Infrastructure Happen

Drawn: F.I.A.
Checked: M.S.S.
Designed: F.I.A.
Approved: I.W.
Date: Aug 2020
SCALE (A3): -
Project No: EP-WS/2019/06
Rev: R-01
Page: W-16

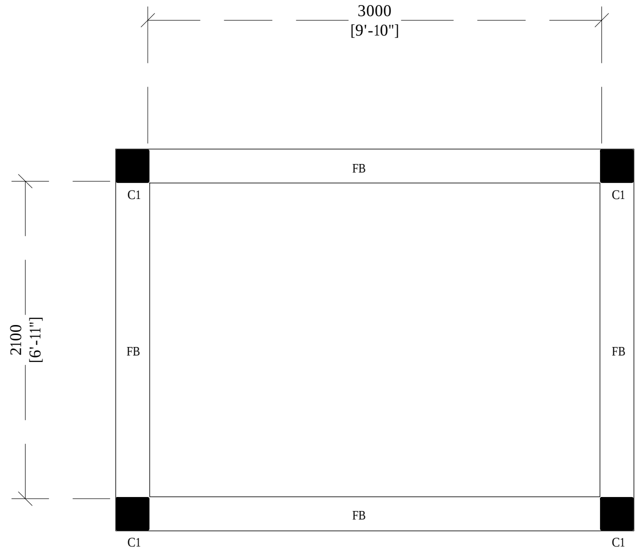

GROUND FLOOR PLAN

1:100

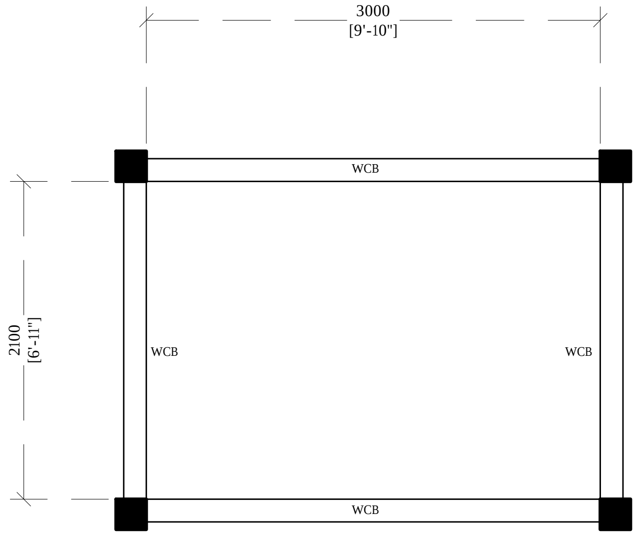

ROOF PLAN

1:100

Door ID	
Plan view	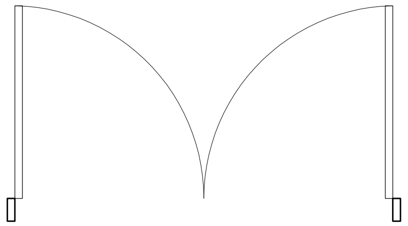
Elevation view	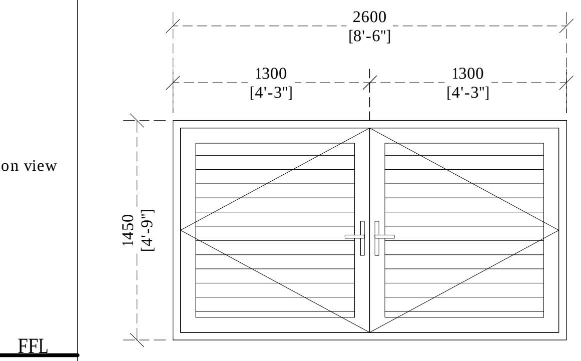
Frame material	600 micron powder coated aluminum frames
Panel material	600 micron powder coated aluminum louvered panel with side aluminum frames with allowance for handle and lock
Openable area	-

General Door Notes:

Dimensions shown on DWG indicate effective openings of frame

All frame depths are 100mm
All dor panel thicknesses are 35mm
All window manel thickness are 25mm
Al frame edges shal be trimmed 3mm

All wodden components should be wood stained finish

All glazing should be of 6mm unless specified

External units must comply the following weather conditions:-
Wind pressure: 200 kg/sqm
Water tightness: 25 kg/sqm

All external frames / wall joints must be sealed with silicon sealant and the wedges trimmed with 12X12mm hardwood beading fixed to frames by brass nails

All hardware should be provided for the performance of al functions of the units

Hinges shall confirm to

1. Door size more than 700X1900mm
    WD: 125mm X2 sets
    SD: 150mm X3 sets
2. Door size less than 700X1900mm
    WD: 100mm X2 sets
    SD: 125mm X2 sets

Locks shall be cylinderical with master key sets

Door knobs shall be1000mm above FFL

Door Schedule

1:100

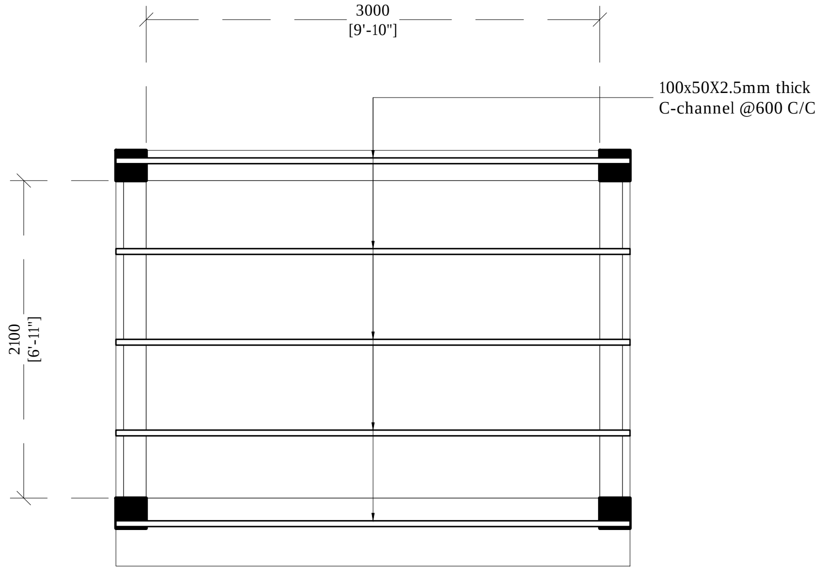

ROOF PLAN

1:100

PUMP SHED DETAILS

Legend

Notes:

- All CHS shall have minimum yield stress of 275MPa
- All welds shall be 6mm thick full perimeter fillet welds
- All Truss ends shall be end capped with 6mm plates
- All truss members shall be protected with anti corrosive coatings

Notes:

- Cover for foundation pads and foundation beams shall be 50mm
- Cover for columns shall be 40mm
- Cover for roof beams shall be 30mm

- Concrete shall be of grade C25
- All concrete cold joints shall casted with bonding agent
- Roof purlins shall be fixed to roof beam with hot-dip galvanized bolts and GI cleats

REV. NO.	Date	Revision Description	Drawn	Chkd	Appd.

Title:
Consultancy Services for Survey, Design and EIA works of Water Supply and Sewerage Facilities in 5 islands, Maldives - Package 6

Sub Title:
Water Supply System in L.Kunahandhoo

Client:
Ministry of National Planning, Housing and Infrastructure, Republic of Maldives

EPOCH ASSOCIATES
T: +960 333 3528
E: info@epoch.associates
W: wwww.epoch.associates
A: G. Rosary West,
Husnuheenaa Magu, Male', Maldives

FEEDBACK INFRA
Making Infrastructure Happen

Drawn:	F.I.A.	Checked:	M.S.S.
Designed:	F.I.A.	Approved:	I.W.
Date:	Aug 2020	SCALE (A3):	1:100

Project No: EP-WS/2019/06

Rev: R-01

Page: W-17

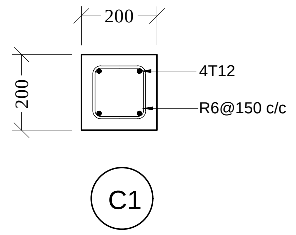

COLUMN DETAIL

1:20

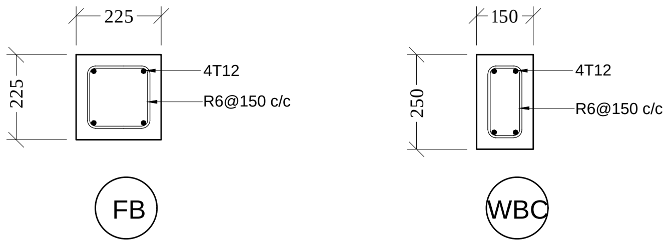

BEAM DETAILS

1:20

PUMP SHED BEAM AND COLUMN DETAILS

1:20

Legend

Notes:

- Cover for foundation pads and foundation beams shall be 50mm
- Cover for columns shall be 40mm
- Cover for roof beams shall be 30mm
- Concrete shall be of grade C25
- All concrete cold joints shall casted with bonding agent
- Roof purlins shall be fixed to roof beam with hot-dip galvanized bolts and GI cleats

REV. NO.	Date	Revision Description	Drawn	Chkd	Appd.

Title:
Consultancy Services for Survey, Design and EIA works of Water Supply and Sewerage Facilities in 5 islands, Maldives - Package 6

Sub Title:
Water Supply System in L.Kunahandhoo

Client:
Ministry of National Planning, Housing and Infrastructure, Republic of Maldives

EPOCH ASSOCIATES
T: +960 333 3528
E: info@epoch.associates
W: wwww.epoch.associates
A: G. Rosary West,
Husnuheenaa Magu, Male', Maldives

FEEDBACK INFRA

Drawn: F.I.A.
Checked: M.S.S.
Designed: F.I.A.
Approved: I.W.
Date: Aug 2020
SCALE (A3): 1:20
Project No: EP-WS/2019/06
Rev: R-01
Page: W-18

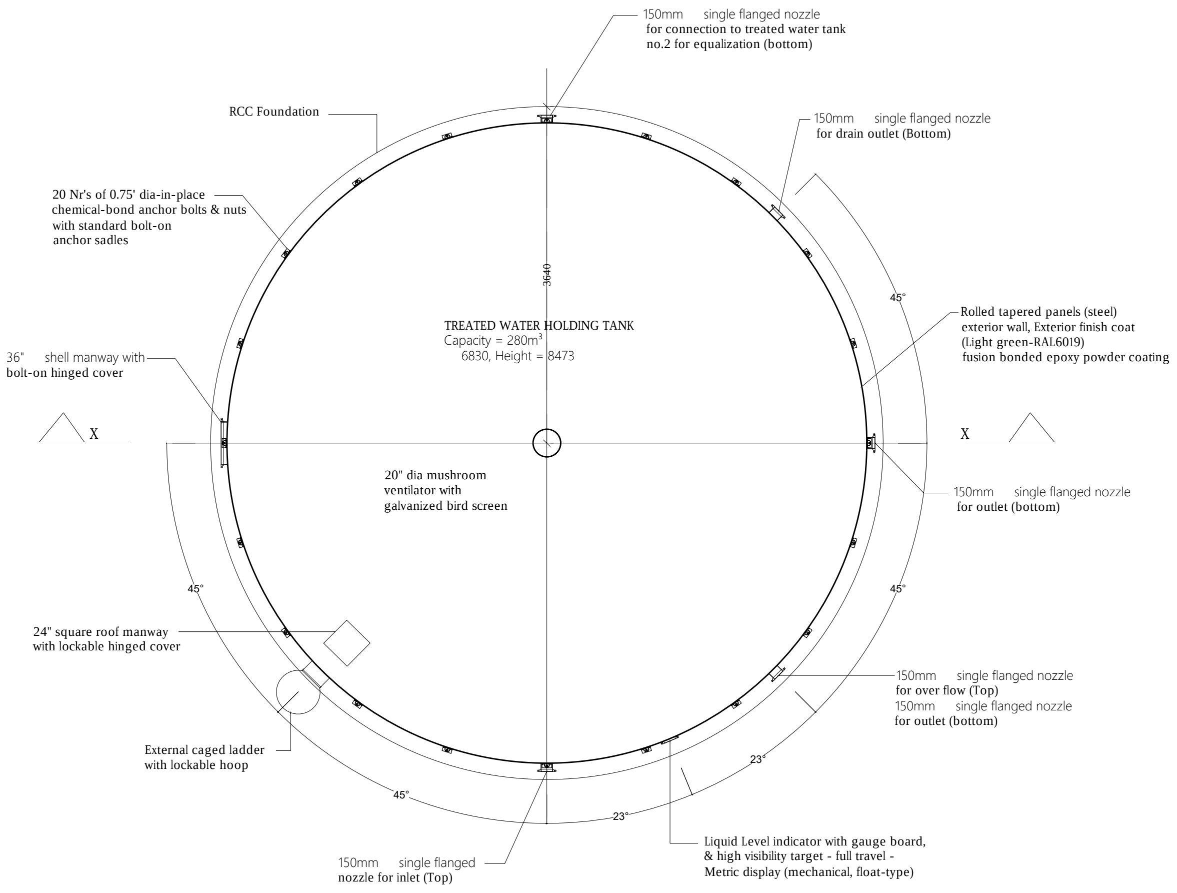
150mm single flanged nozzle for connection to treated water tank no.2 for equalization (bottom)
RCC Foundation
150mm single flanged nozzle for drain outlet (Bottom)
20 Nr's of 0.75' dia-in-place chemical-bond anchor bolts & nuts with standard bolt-on anchor sadles
3640
45°
Rolled tapered panels (steel) exterior wall, Exterior finish coat (Light green-RAL6019) fusion bonded epoxy powder coating
TREATED WATER HOLDING TANK
Capacity = 280m³
6830, Height = 8473
36" shell manway with bolt-on hinged cover
X
X
20" dia mushroom ventilator with galvanized bird screen
150mm single flanged nozzle for outlet (bottom)
45°
45°
24" square roof manway with lockable hinged cover
150mm single flanged nozzle for over flow (Top)
150mm single flanged nozzle for outlet (bottom)
External caged ladder with lockable hoop
23°
45°
23°
150mm single flanged nozzle for inlet (Top)
Liquid Level indicator with gauge board, & high visibility target - full travel - Metric display (mechanical, float-type)

TREATED WATER HOLDING TANK AND FOUNDATION- PLAN

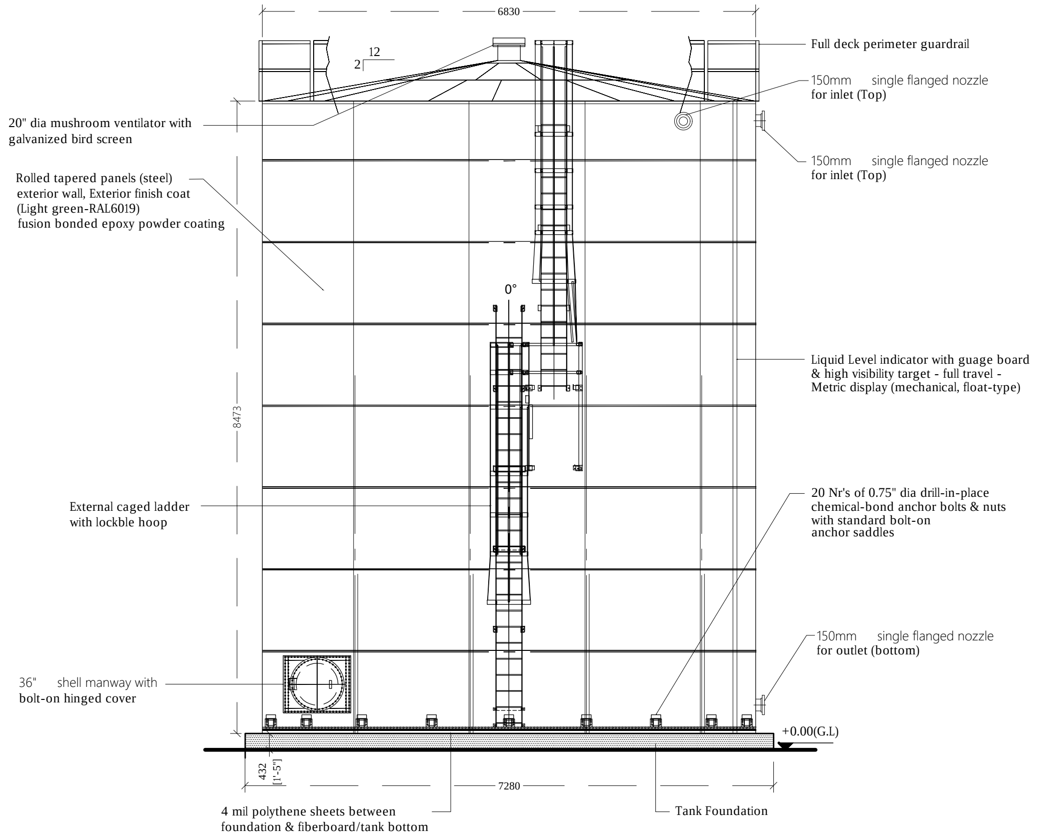
6830
12
2
Full deck perimeter guardrail
150mm single flanged nozzle for inlet (Top)
20" dia mushroom ventilator with galvanized bird screen
150mm single flanged nozzle for inlet (Top)
Rolled tapered panels (steel) exterior wall, Exterior finish coat (Light green-RAL6019) fusion bonded epoxy powder coating
0°
8473
Liquid Level indicator with guage board & high visibility target - full travel - Metric display (mechanical, float-type)
External caged ladder with lockble hoop
20 Nr's of 0.75" dia drill-in-place chemical-bond anchor bolts & nuts with standard bolt-on anchor saddles
150mm single flanged nozzle for outlet (bottom)
36" shell manway with bolt-on hinged cover
+0.00(G.L)
432 [1'-5"]
7280
4 mil polythene sheets between foundation & fiberboard/tank bottom
Tank Foundation

TREATED WATER HOLDING TANK AND FOUNDATION- ELEVATION

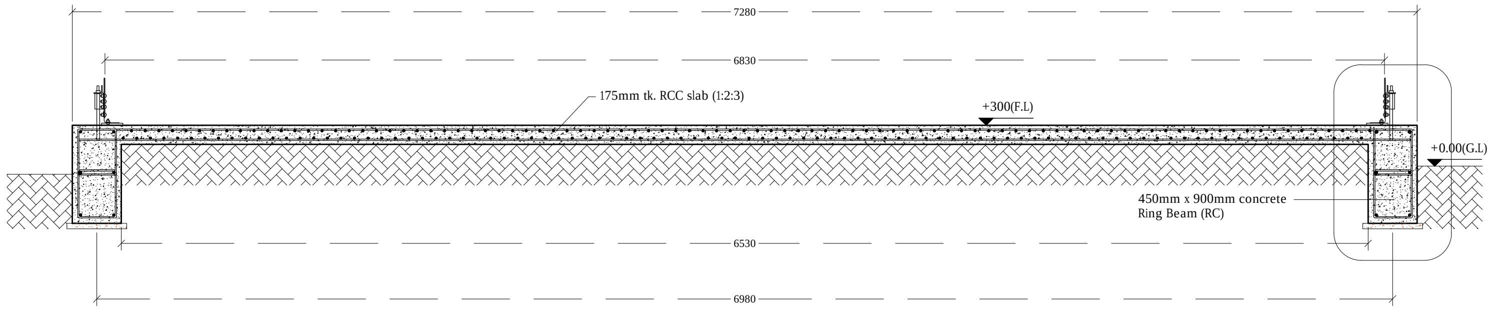
7280
6830
175mm tk. RCC slab (1:2:3)
+300(F.L)
+0.00(G.L)
450mm x 900mm concrete Ring Beam (RC)
6530
6980

SECTION X-X

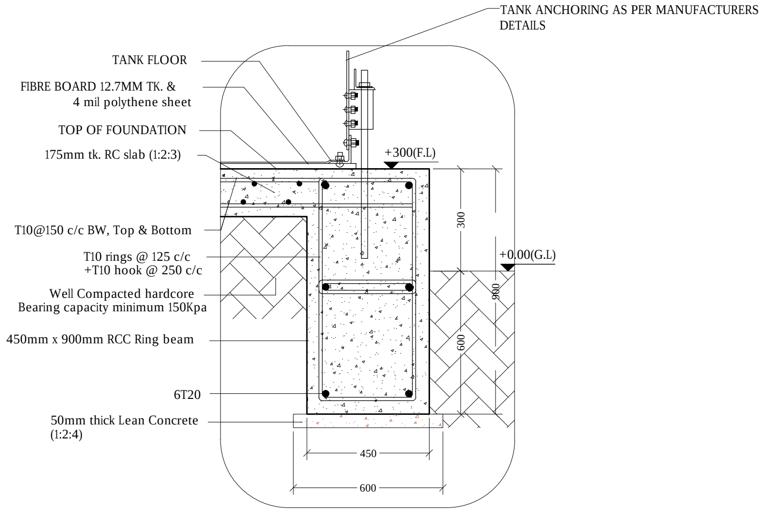
TANK ANCHORING AS PER MANUFACTURERS DETAILS
TANK FLOOR
FIBRE BOARD 12.7MM TK. & 4 mil polythene sheet
TOP OF FOUNDATION
175mm tk. RC slab (1:2:3)
+300(F.L)
300
T10@150 c/c BW, Top & Bottom
T10 rings @ 125 c/c +T10 hook @ 250 c/c
+0.00(G.L)
Well Compacted hardcore Bearing capacity minimum 150Kpa
900
450mm x 900mm RCC Ring beam
600
6T20
50mm thick Lean Concrete (1:2:4)
450
600

DETAIL

Note:-
Cover = 50mm
Lap length 50

TREATED WATER TANK DETAILS

NTS

Legend

Note:
-Orientation of tanks and pipe work to suit location.
-All structural concrete shall be of grade C30.
-All castings shall be done using sulphate resistant portland cement to BS 4027:1996.
-All structural reinforcement shall be epoxy coating of non-pre-stressed reinforcement to ASTM-A775/A775M.
-A cover of 75mm should be given for all reinforcements.
- All concrete cold joints shall casted with bonding agent.
-Tank foundation to be approved based on manufacturers recommendation.

REV. NO.	Date	Revision Description	Drawn	Chkd	Appd.

Title:
Consultancy Services for Survey, Design and EIA works of Water Supply and Sewerage Facilities in 5 islands, Maldives - Package 6

Sub Title:
Water Supply System in L.Kunahandhoo

Client:
Ministry of National Planning, Housing and Infrastructure, Republic of Maldives

EPOCH ASSOCIATES
T: +960 333 3528
E: info@epoch.associates
W: wwww.epoch.associates
A: G. Rosary West,
Husnuheenaa Magu, Male', Maldives

FEEDBACK INFRA
Making Infrastructure Happen

Drawn: F.I.A.
Checked: M.S.S.
Designed: F.I.A.
Approved: I.W.
Date: Aug 2020
SCALE (A3): NTS
Project No: EP-WS/2019/06
Rev: R-01
Page: W-19

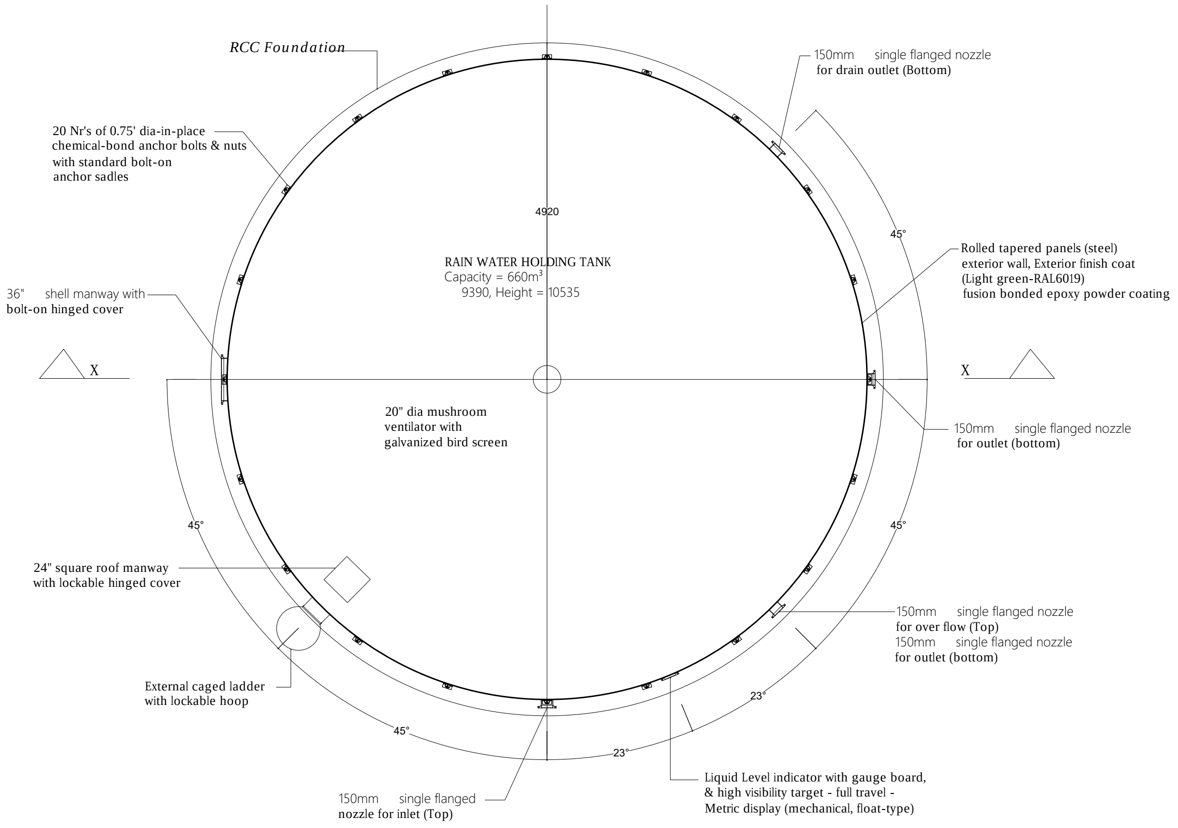
RCC Foundation
150mm single flanged nozzle for drain outlet (Bottom)
20 Nr's of 0.75' dia-in-place chemical-bond anchor bolts & nuts with standard bolt-on anchor sadles
4920
45°
RAIN WATER HOLDING TANK
Capacity = 660m³
9390, Height = 10535
Rolled tapered panels (steel) exterior wall, Exterior finish coat (Light green-RAL6019) fusion bonded epoxy powder coating
36" shell manway with bolt-on hinged cover
X
X
20" dia mushroom ventilator with galvanized bird screen
150mm single flanged nozzle for outlet (bottom)
45°
45°
24" square roof manway with lockable hinged cover
150mm single flanged nozzle for over flow (Top)
150mm single flanged nozzle for outlet (bottom)
External caged ladder with lockable hoop
23°
45°
23°
150mm single flanged nozzle for inlet (Top)
Liquid Level indicator with gauge board, & high visibility target - full travel - Metric display (mechanical, float-type)

RAINWATER HOLDING TANK AND FOUNDATION- PLAN

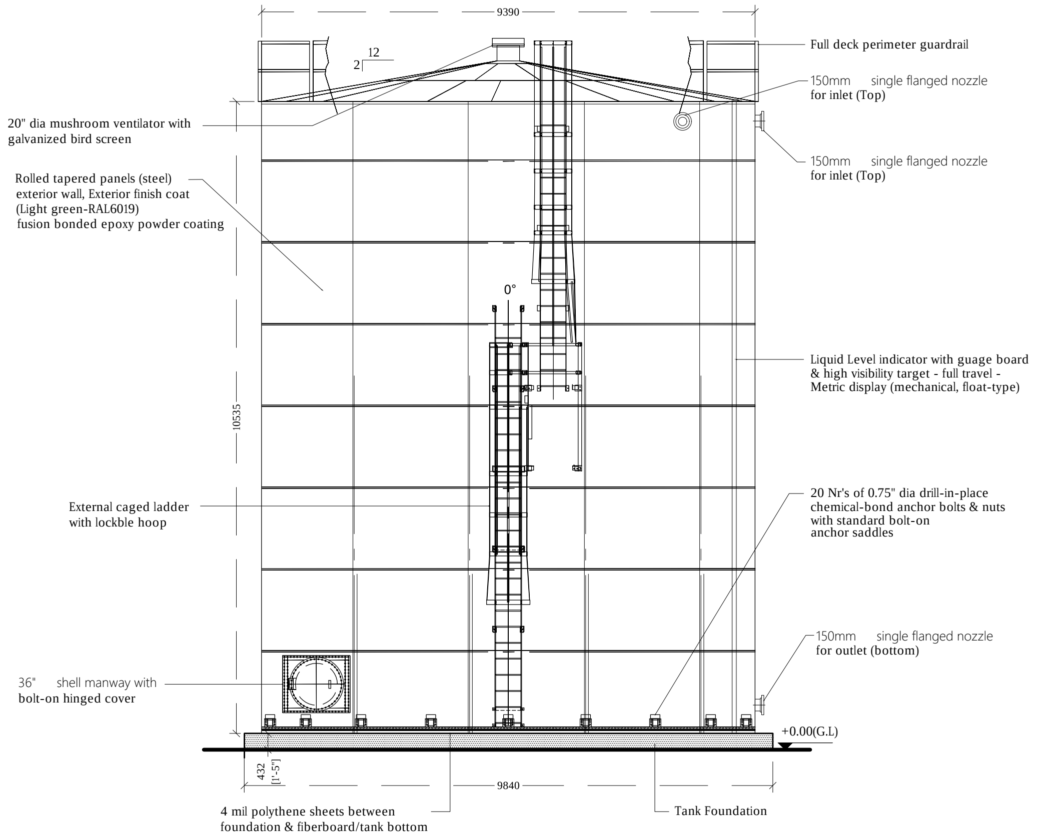
9390
12
2
Full deck perimeter guardrail
150mm single flanged nozzle for inlet (Top)
20" dia mushroom ventilator with galvanized bird screen
150mm single flanged nozzle for inlet (Top)
Rolled tapered panels (steel) exterior wall, Exterior finish coat (Light green-RAL6019) fusion bonded epoxy powder coating
0°
Liquid Level indicator with guage board & high visibility target - full travel - Metric display (mechanical, float-type)
10535
20 Nr's of 0.75" dia drill-in-place chemical-bond anchor bolts & nuts with standard bolt-on anchor saddles
External caged ladder with lockble hoop
150mm single flanged nozzle for outlet (bottom)
36" shell manway with bolt-on hinged cover
+0.00(G.L)
432 [1'-5"]
9840
4 mil polythene sheets between foundation & fiberboard/tank bottom
Tank Foundation

RAINWATER HOLDING TANK AND FOUNDATION- ELEVATION

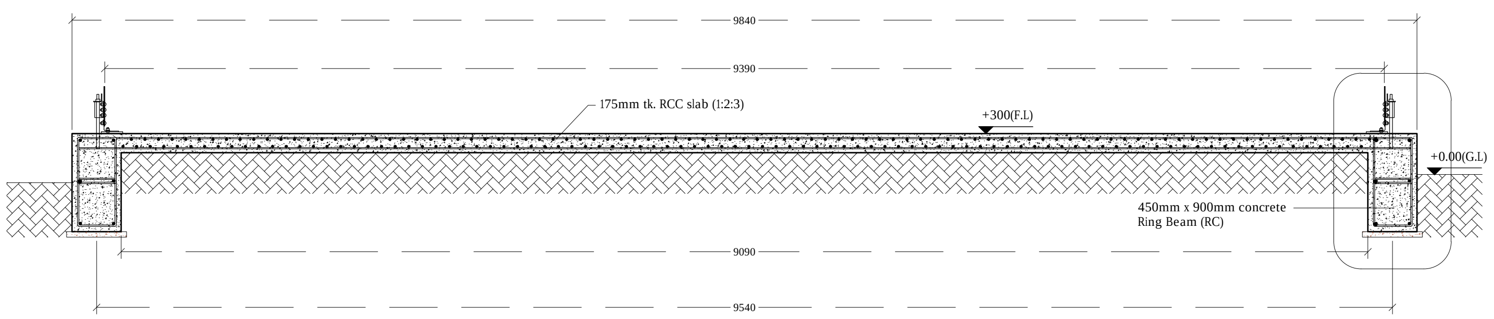
9840
9390
175mm tk. RCC slab (1:2:3)
+300(F.L)
+0.00(G.L)
450mm x 900mm concrete Ring Beam (RC)
9090
9540

SECTION X-X

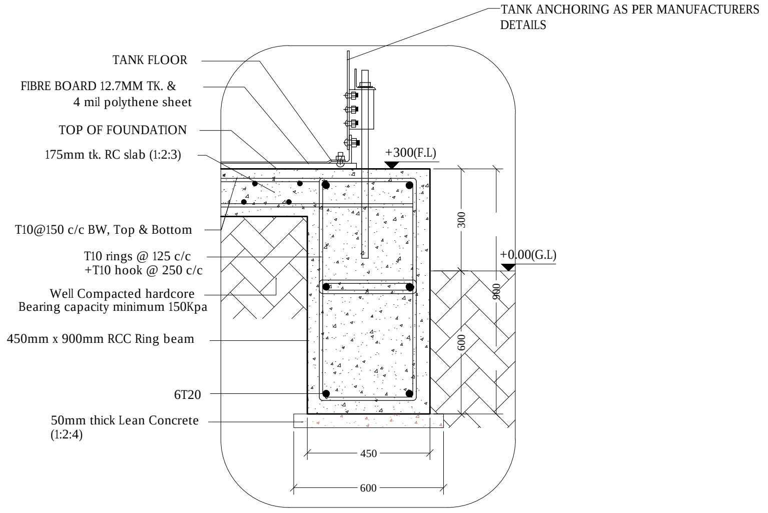
TANK ANCHORING AS PER MANUFACTURERS DETAILS
TANK FLOOR
FIBRE BOARD 12.7MM TK. & 4 mil polythene sheet
TOP OF FOUNDATION
175mm tk. RC slab (1:2:3)
+300(F.L)
300
T10@150 c/c BW, Top & Bottom
T10 rings @ 125 c/c +T10 hook @ 250 c/c
+0.00(G.L)
900
Well Compacted hardcore Bearing capacity minimum 150Kpa
450mm x 900mm RCC Ring beam
600
6T20
50mm thick Lean Concrete (1:2:4)
450
600

DETAIL

Note:-
Cover = 50mm
Lap length 50

RAINWATER HOLDING TANK DETAILS

NTS

Legend

Note:
-Orientation of tanks and pipe work to suit location.
-All structural concrete shall be of grade C30.
-All castings shall be done using sulphate resistant portland cement to BS 4027:1996.
-All structural reinforcement shall be epoxy coating of non-pre-stressed reinforcement to ASTM-A775/A775M.
-A cover of 75mm should be given for all reinforcements.
- All concrete cold joints shall casted with bonding agent.
-Tank foundation to be approved based on manufacturers recommendation.

REV. NO.	Date	Revision Description	Drawn	Chkd	Appd.

Title:
Consultancy Services for Survey, Design and EIA works of Water Supply and Sewerage Facilities in 5 islands, Maldives - Package 6

Sub Title:
Water Supply System in L.Kunahandhoo

Client:
Ministry of National Planning, Housing and Infrastructure, Republic of Maldives

EPOCH ASSOCIATES
T: +960 333 3528
E: info@epoch.associates
W: wwww.epoch.associates
A: G. Rosary West,
Husnuheenaa Magu, Male', Maldives

FEEDBACK INFRA
Making Infrastructure Happen

Drawn:	F.I.A.	Checked:	M.S.S.
Designed:	F.I.A.	Approved:	I.W.
Date:	Aug 2020	SCALE (A3):	NTS
Project No:	EP-WS/2019/06		
Rev:	R-01	Page:	W-20

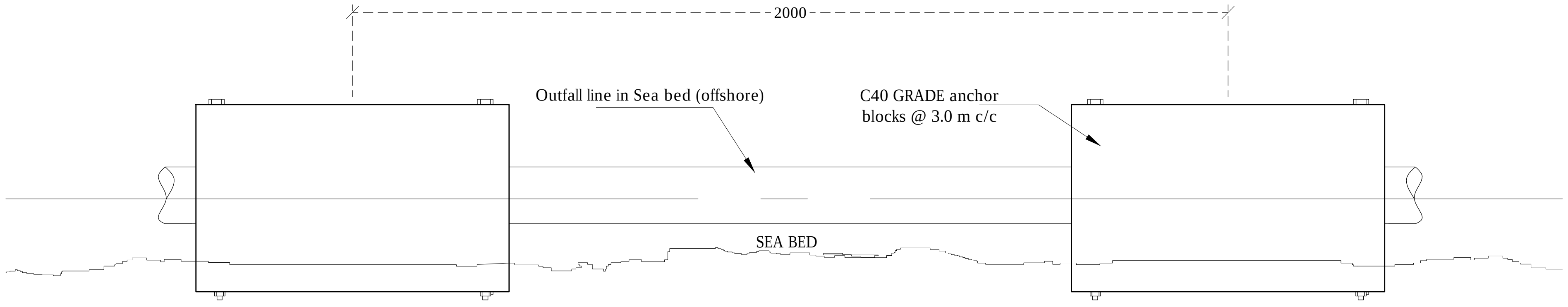
2000
Outfall line in Sea bed (offshore)
C40 GRADE anchor
blocks @ 3.0 m c/c
SEA BED

BALLAST BLOCK SIDE ELEVATION

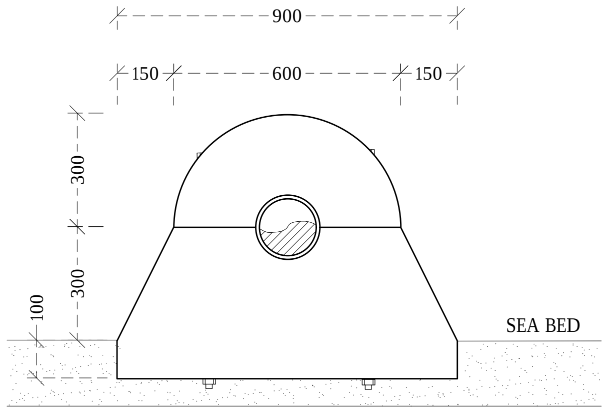
900
150
600
150
300
300
100
SEA BED

BALLAST BLOCK FRONT ELEVATION

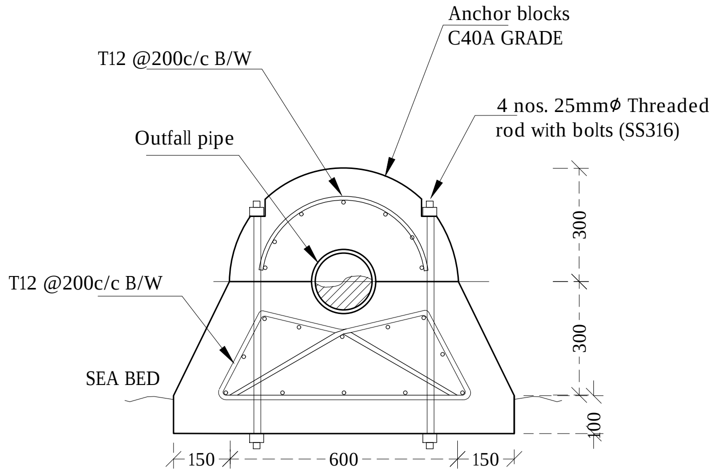
Anchor blocks
C40A GRADE
T12 @200c/c B/W
4 nos. 25mmØ Threaded
rod with bolts (SS316)
Outfall pipe
T12 @200c/c B/W
SEA BED
300
300
100
150
600
150

BALLAST BLOCK SECTION

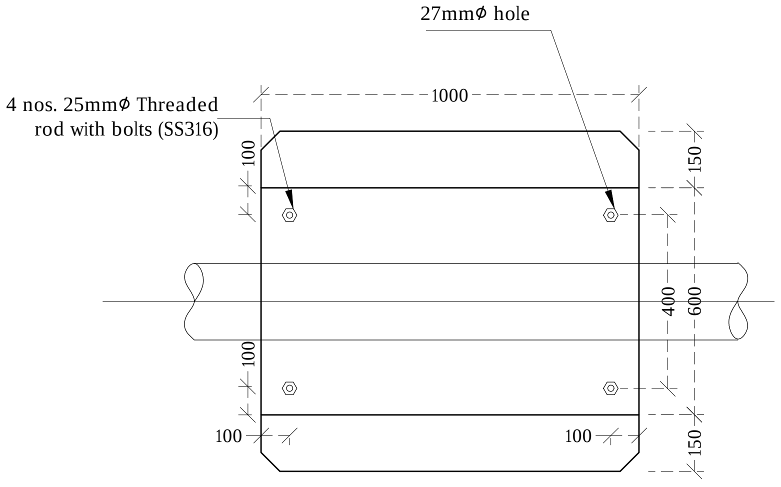
27mmØ hole
4 nos. 25mmØ Threaded
rod with bolts (SS316)
1000
100
150
400
600
100
100
100
150

BALLAST BLOCK PLAN

Legend

Notes:

- All backing rings for stub flanges , nuts and bolts shall be grade 316 stainless steel.
- All pipe work shall be bedded on 10mm thick neoprene rubber seat in semicircular recess matching the O.D. the pipe.
- Fabricate specific pipe clamps to provide firm clamping action according to pipe O.D.
- All structural concrete shall be of grade C40A.
- All castings shall be done using sulphate resistant portland cement to BS 4027:1996.
- All structural reinforcement shall be epoxy coating of non-pre-stressed reinforcement to ASTM-A775/A775M.
- A cover of 75mm should be given for all reinforcements.
- In shallow water(regions where the depth is less than 1m), the ballast block spacing is 3.5m. In deeper water (regions where the depth is greater than 1m), the ballast block spacing is 2.0m. All distances are from c/c of blocks.
- All pipe connections to be placed inside the ballast blocks.

REV. NO.	Date	Revision Description	Drawn	Chkd	Appd.

Title:
Consultancy Services for Survey, Design and EIA works of Water Supply and Sewerage Facilities in 5 islands, Maldives - Package 6

Sub Title:
Water Supply System in L.Kunahandhoo

Client:
Ministry of National Planning, Housing and Infrastructure, Republic of Maldives

T: +960 333 3528
E: info@epoch.associates
W: wwww.epoch.associates
A: G. Rosary West,
Husnuheenaa Magu, Male', Maldives

Drawn: F.I.A.
Checked: M.S.S.
Designed: F.I.A.
Approved: I.W.
Date: Aug 2020
SCALE (A3): NTS
Project No: EP-WS/2019/06
Rev: R-01
Page: W-21

BALLAST BLOCK DETAILS

NTS

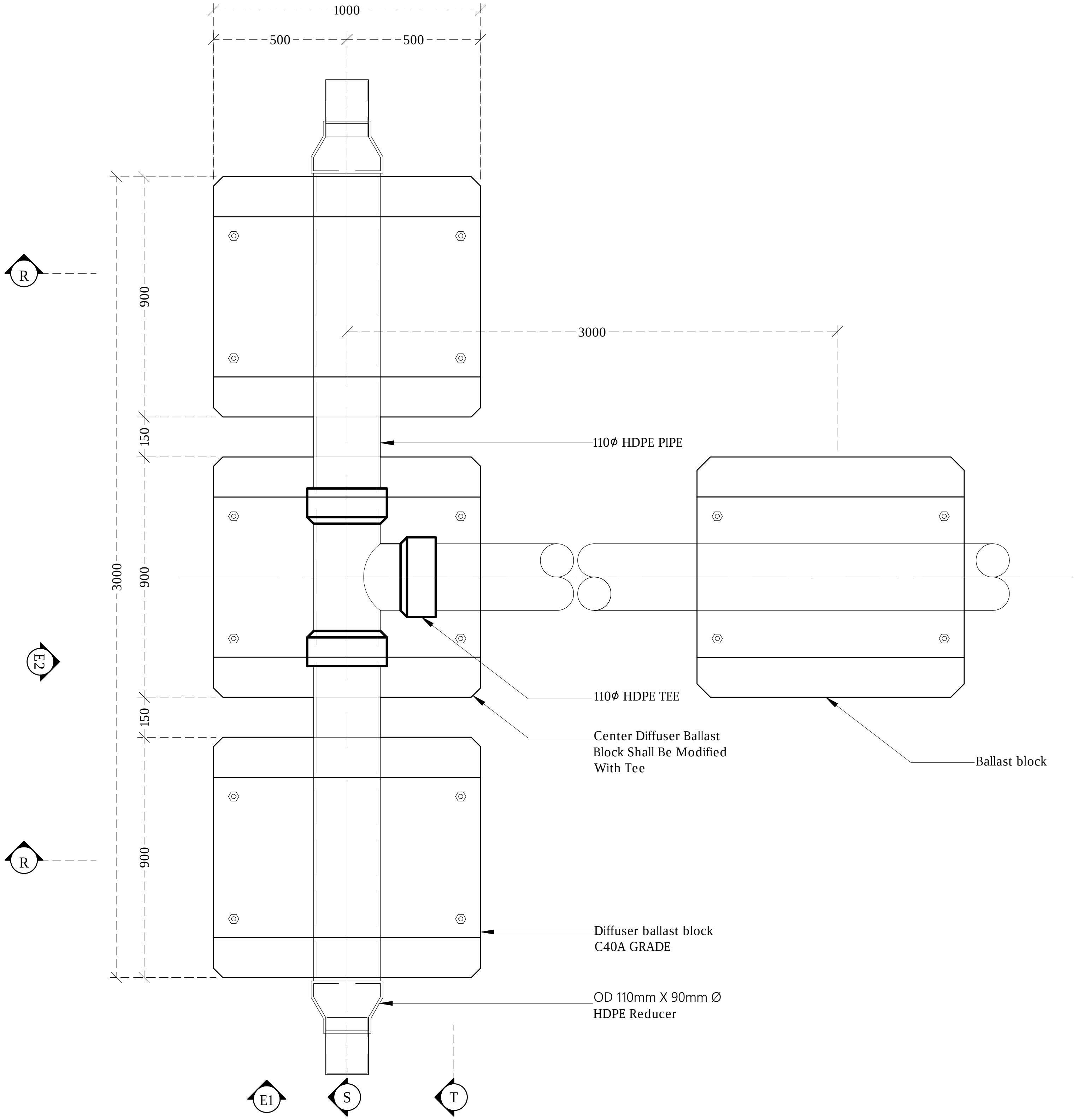
1000
500
500
3000
900
150
900
150
900
3000
R
R
E2
E1
S
T
110Ø HDPE PIPE
110Ø HDPE TEE
Center Diffuser Ballast Block Shall Be Modified With Tee
Ballast block
Diffuser ballast block C40A GRADE
OD 110mm X 90mm Ø HDPE Reducer

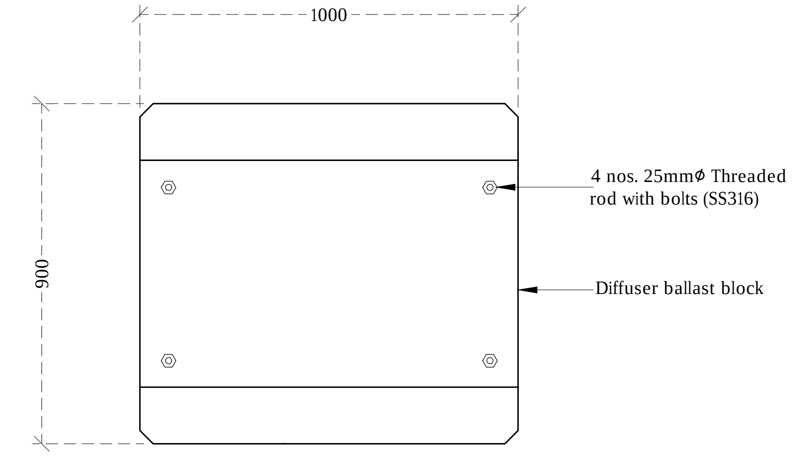
1000
900
4 nos. 25mmØ Threaded rod with bolts (SS316)
Diffuser ballast block

DIFFUSER BALLAST BLOCK PLAN

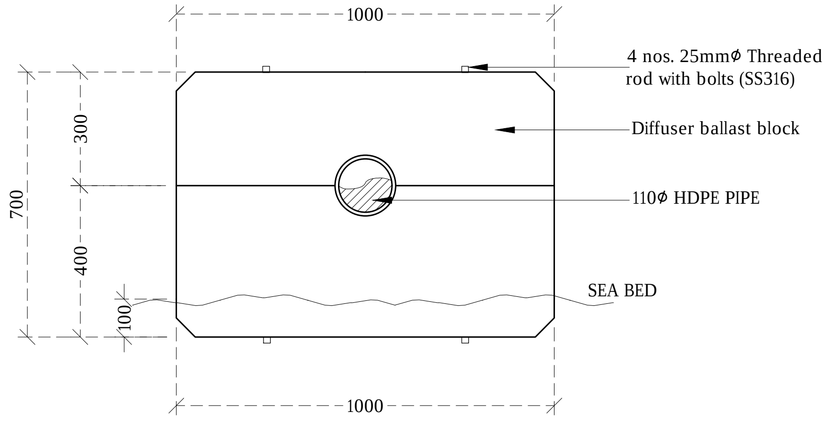
1000
700
300
400
100
1000
4 nos. 25mmØ Threaded rod with bolts (SS316)
Diffuser ballast block
110Ø HDPE PIPE
SEA BED

DIFFUSER BALLAST BLOCK FRONT ELEVATION - E1

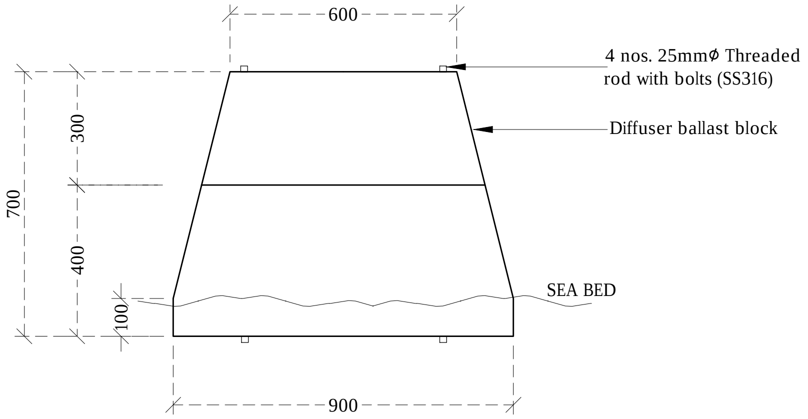
600
700
300
400
100
900
4 nos. 25mmØ Threaded rod with bolts (SS316)
Diffuser ballast block
SEA BED

DIFFUSER BALLAST BLOCK FRONT ELEVATION - E2

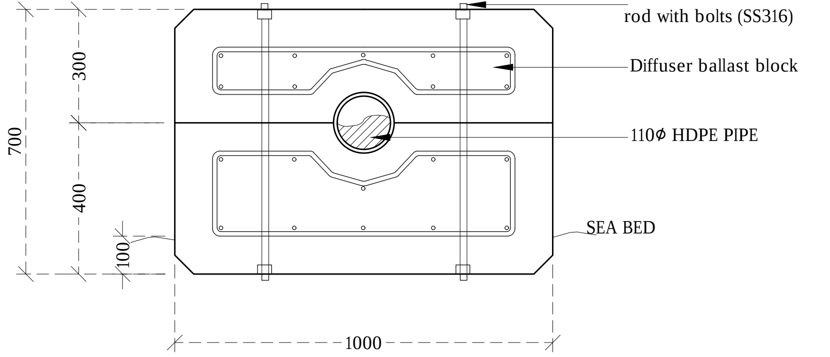
700
300
400
100
1000
4 nos. 25mmØ Threaded rod with bolts (SS316)
Diffuser ballast block
110Ø HDPE PIPE
SEA BED

DIFFUSER BALLAST BLOCK SECTION - R

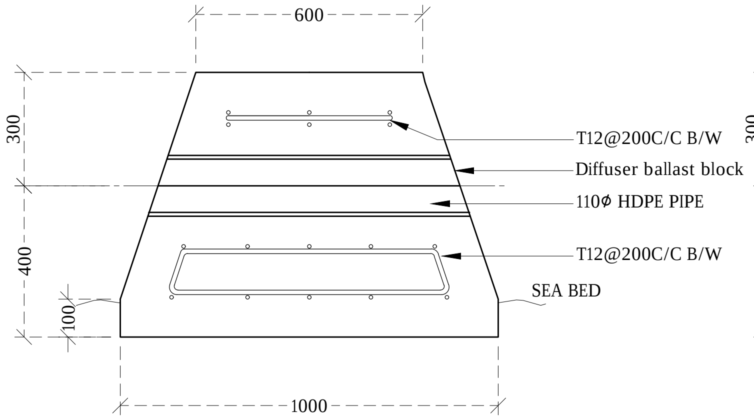
600
300
400
100
1000
T12@200C/C B/W
Diffuser ballast block
110Ø HDPE PIPE
T12@200C/C B/W
SEA BED

DIFFUSER BALLAST BLOCK SECTION - S

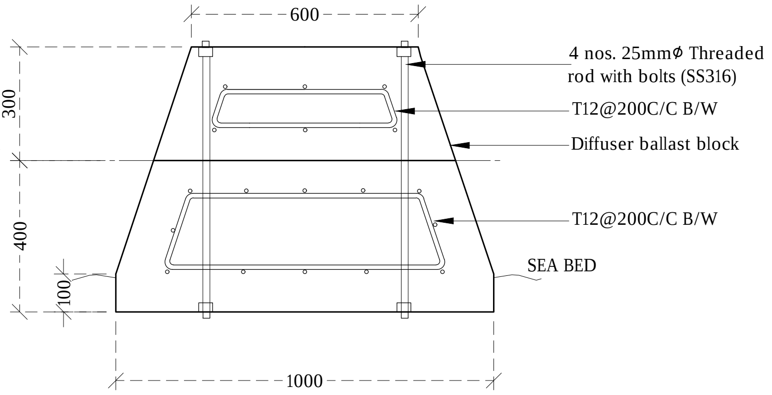
600
300
400
100
1000
4 nos. 25mmØ Threaded rod with bolts (SS316)
T12@200C/C B/W
Diffuser ballast block
T12@200C/C B/W
SEA BED

DIFFUSER BALLAST BLOCK SECTION - T

DIFFUSER DETAILS

NTS

Legend

ges , nuts and bolts shall

l on 10mm thick
circular recess matching

s to provide firm
pipe O.D.
e of grade C40A.
ng sulphate resistant
1996.
hall be epoxy coating of
ent to

given for all

REV. NO.	Date	Revision Description	Drawn	Chkd	Appd.

Title:
Consultancy Services for Survey, Design and EIA works of Water Supply and Sewerage Facilities in 5 islands, Maldives - Package 6

Sub Title:
Water Supply System in L.Kunahandhoo

Client:
Ministry of National Planning, Housing and Infrastructure, Republic of Maldives

EPOCH ASSOCIATES
T: +960 333 3528
E: info@epoch.associates
W: wwww.epoch.associates
A: G. Rosary West,
Husnuheenaa Magu, Male', Maldives

FEEDBACK INFRA
Making Infrastructure Happen

Drawn: F.I.A.
Checked: M.S.S.
Designed: F.I.A.
Approved: I.W.
Date: Aug 2020
SCALE (A3): NTS
Project No: EP-WS/2019/06
Rev: R-01
Page: W-22

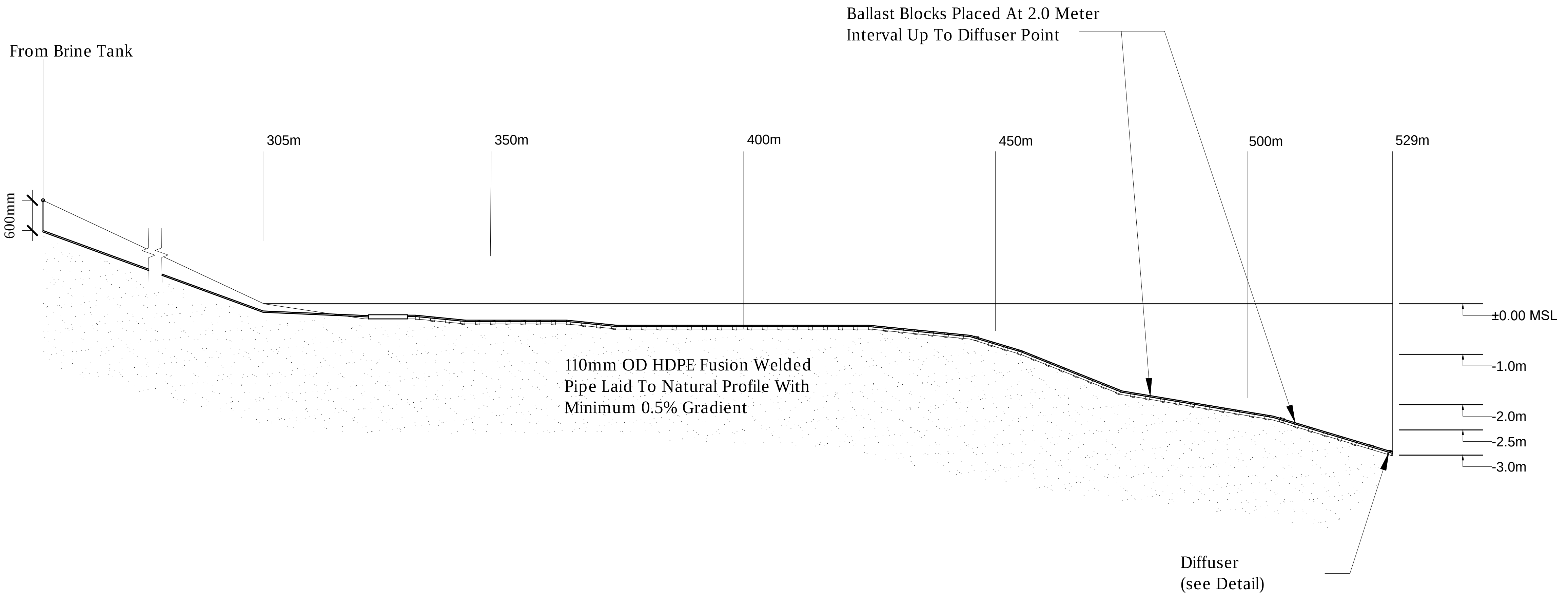
Ballast Blocks Placed At 2.0 Meter
Interval Up To Diffuser Point
From Brine Tank
305m
350m
400m
450m
500m
529m
600mm
±0.00 MSL
-1.0m
-2.0m
-2.5m
-3.0m
110mm OD HDPE Fusion Welded
Pipe Laid To Natural Profile With
Minimum 0.5% Gradient
Diffuser
(see Detail)

BRINE SEA OUTFALL DETAIL

NTS

Legend

ut a detailed
e proposed area, revise
ng for the outfall layout
f outfall works.
is 2.0m. All distances

REV. NO.	Date	Revision Description	Drawn	Chkd	Appd.

Title:
Consultancy Services for Survey, Design and EIA works of Water Supply and Sewerage Facilities in 5 islands, Maldives - Package 6

Sub Title:
Water Supply System in L.Kunahandhoo

Client:
Ministry of National Planning, Housing and Infrastructure, Republic of Maldives

T: +960 333 3528
E: info@epoch.associates
W: wwww.epoch.associates
A: G. Rosary West,
Husnuheenaa Magu, Male', Maldives

Drawn: F.I.A.
Checked: M.S.S.
Designed: F.I.A.
Approved: I.W.
Date: Aug 2020
SCALE (A3): NTS
Project No: EP-WS/2019/06
Rev: R-01
Page: W-23

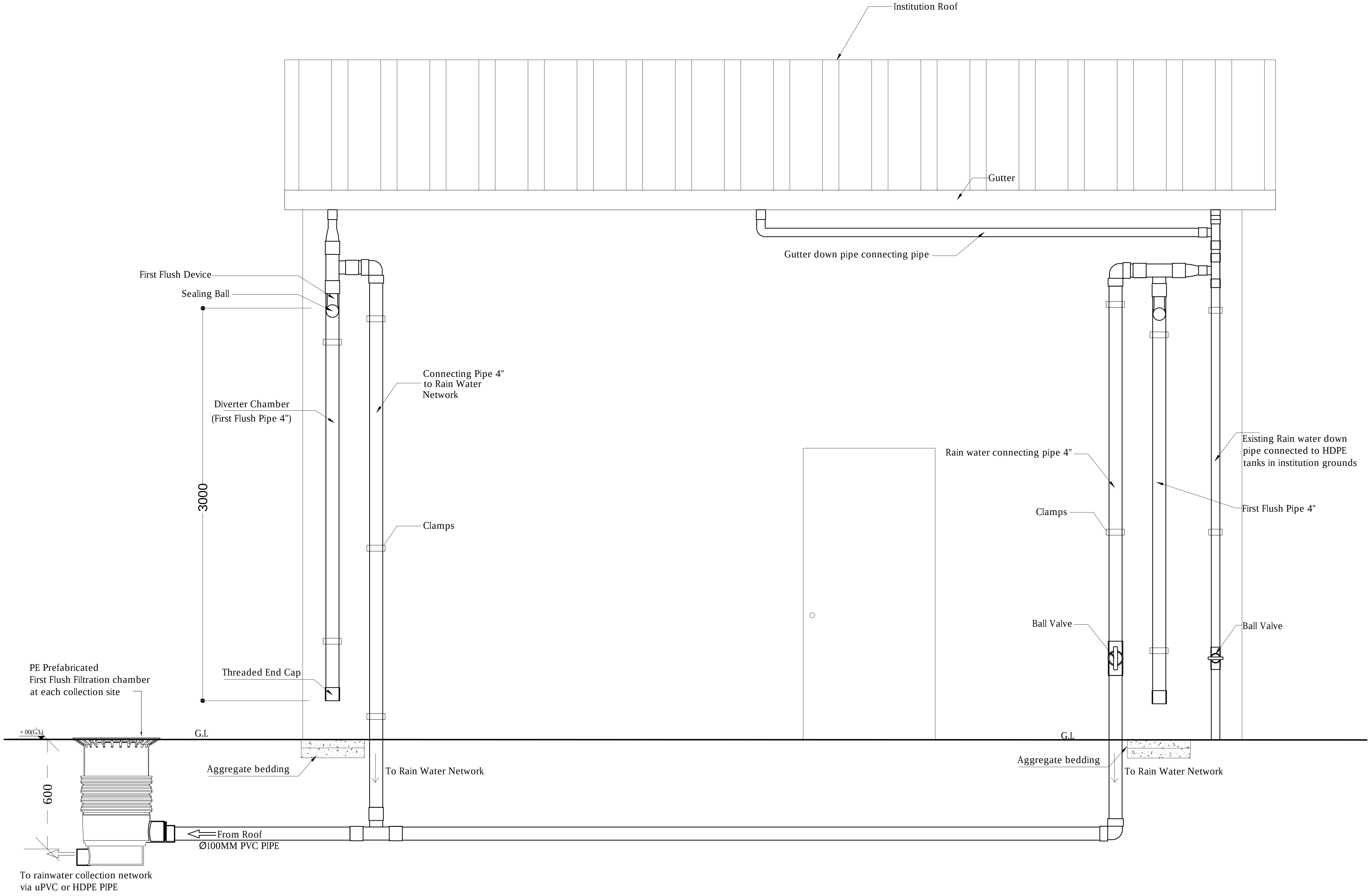
Institution Roof
Gutter
Gutter down pipe connecting pipe
First Flush Device
Sealing Ball
3000
Connecting Pipe 4"
to Rain Water
Network
Diverter Chamber
(First Flush Pipe 4")
Clamps
Threaded End Cap
PE Prefabricated
First Flush Filtration chamber
at each collection site
+ 00(G.L)
G.L
600
Aggregate bedding
To Rain Water Network
From Roof
Ø100MM PVC PIPE
To rainwater collection network
via uPVC or HDPE PIPE
Rain water connecting pipe 4"
Existing Rain water down
pipe connected to HDPE
tanks in institution grounds
Clamps
First Flush Pipe 4"
Ball Valve
Ball Valve
G.L
Aggregate bedding
To Rain Water Network

RAINWATER FIRST FLUSH MECHANISM

NTS

Legend

Notes:
- Prefab filtration chambers will be used as first flush mechanism.
- Filtration chambers suppliers to be approved by engineer.
- Number of chambers will be based on approved manufacturers roof area recommendations.
- Overflow mechanism will be installed on only corner down pipes or where necessary.
- All down pipes are 3 inch dia PVC pipes.
- The filtration chamber will have a screen to prevent entry of debris and dirt.
- Clamps and hangers shall be fixed at 1.5m intervals.

REV. NO.	Date	Revision Description	Drawn	Chkd	Appd.

Title:
Consultancy Services for Survey, Design and EIA works of Water Supply and Sewerage Facilities in 5 islands, Maldives - Package 6

Sub Title:
Water Supply System in L.Kunahandhoo

Client:
Ministry of National Planning, Housing and Infrastructure, Republic of Maldives

EPOCH ASSOCIATES
T: +960 333 3528
E: info@epoch.associates
W: wwww.epoch.associates
A: G. Rosary West,
Husnuheenaa Magu, Male', Maldives

FEEDBACK INFRA
Making Infrastructure Happen

Drawn: F.I.A.
Checked: M.S.S.
Designed: F.I.A.
Approved: I.W.
Date: Aug 2020
SCALE (A3): NTS
Project No: EP-WS/2019/06
Rev: R-01
Page: W-24

N

Legend

= PVC PIPES Ø160mm

= PVC PIPES Ø110mm

Notes:
- Shop drawings to be produced based on site location for engineers approval.

-Approximate Network Length = 232.5m

167.9m

-Approximate Pipe Network Length (Diameter 160mm) = 60.7m

-Approximate Pipe Network Length (Diameter 110mm) = 171.8m

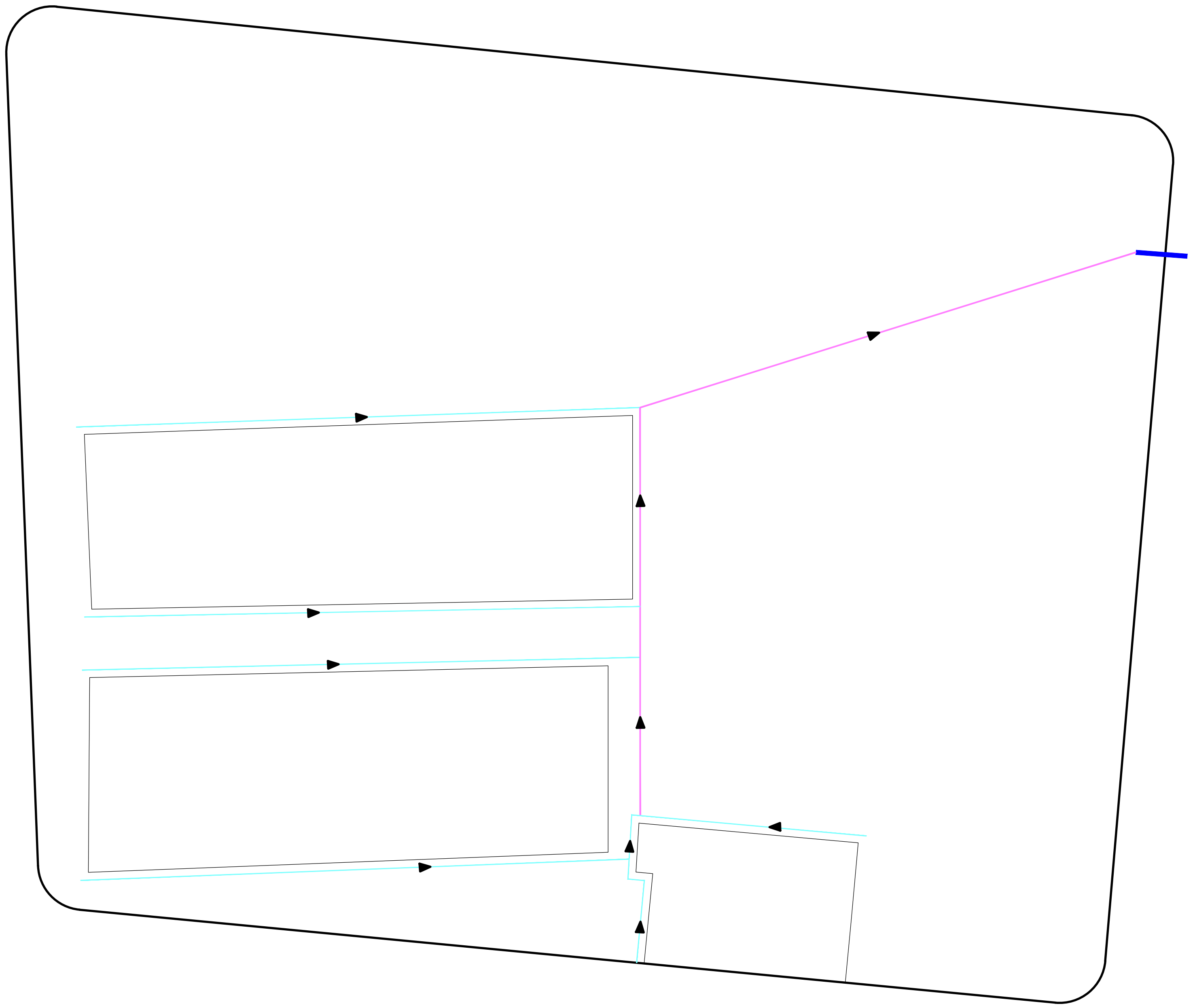

INTERNAL NETWORK LAYOUT- SCHOOL

1:400

REV. NO.	Date	Revision Description	Drawn	Chkd	Appd.

Title:
Consultancy Services for Survey, Design and EIA works of Water Supply and Sewerage Facilities in 5 islands, Maldives - Package 6

Sub Title:
Water Supply System in L.Kunahandhoo

Client:
Ministry of National Planning, Housing and Infrastructure, Republic of Maldives

EPOCH ASSOCIATES

T: +960 333 3528
E: info@epoch.associates
W: wwww.epoch.associates
A: G. Rosary West,
Husnuheenaa Magu, Male', Maldives

FEEDBACK INFRA
Making Infrastructure Happen

Drawn: F.I.A.
Checked: M.S.S.
Designed: F.I.A.
Approved: I.W.
Date: Aug 2020
SCALE (A3): 1:20
Project No: EP-WS/2019/06
Rev: R-01
Page: W-25

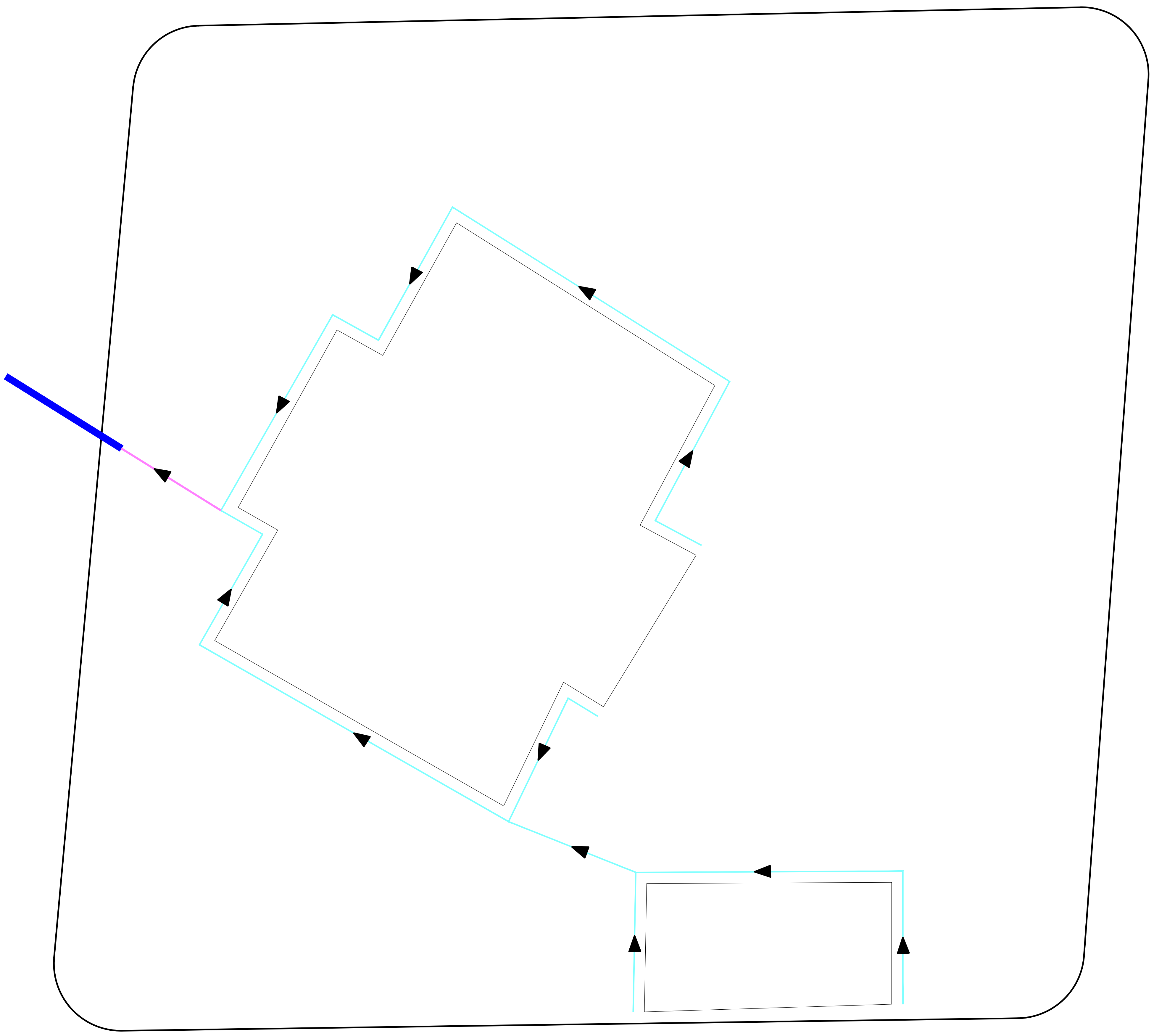

INTERNAL NETWORK LAYOUT- MOSQUE

1:200

Legend

= PVC PIPES Ø160mm

= PVC PIPES Ø110mm

otes:
Shop drawings to be produced based on site location
r engineers approval.

Approximate Network Length =110.1m

Approximate Gutter Length =101.4m

Approximate Pipe Network Length (Diameter 160mm) =
.2m

Approximate Pipe Network Length (Diameter 110mm) =
04.9m

REV. NO.	Date	Revision Description	Drawn	Chkd	Appd.

Title:
Consultancy Services for Survey, Design and EIA works of Water Supply and Sewerage Facilities in 5 islands, Maldives - Package 6

Sub Title:
Water Supply System in L.Kunahandhoo

Client:
Ministry of National Planning, Housing and Infrastructure, Republic of Maldives

EPOCH ASSOCIATES
T: +960 333 3528
E: info@epoch.associates
W: wwww.epoch.associates
A: G. Rosary West,
Husnuheenaa Magu, Male', Maldives

FEEDBACK INFRA
Making Infrastructure Happen

Drawn: F.I.A.
Checked: M.S.S.
Designed: F.I.A.
Approved: I.W.
Date: Aug 2020
SCALE (A3): 1:20
Project No: EP-WS/2019/06
Rev: R-01
Page: W-26

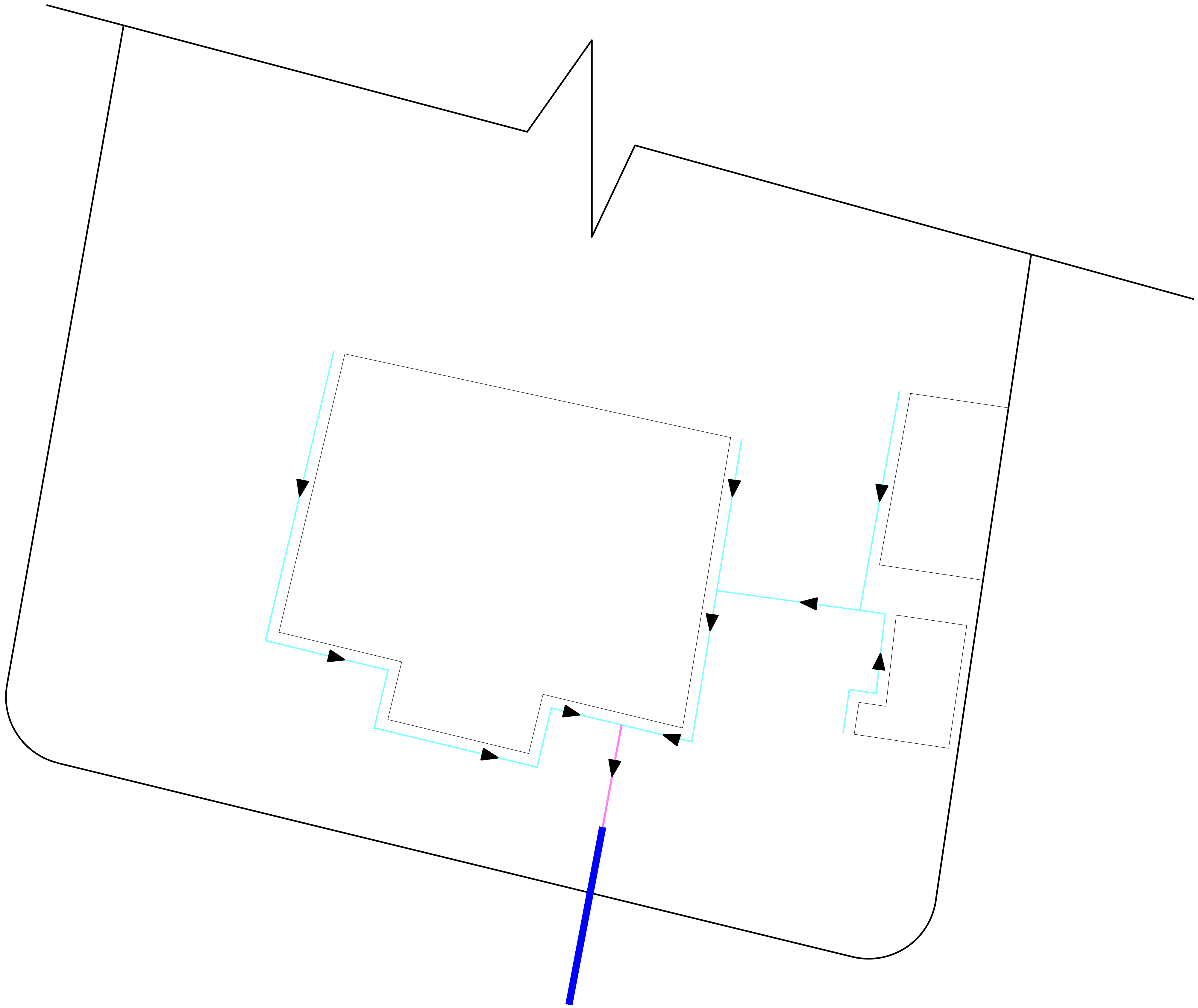

INTERNAL NETWORK LAYOUT- HEALTH CENTER

1:200

Legend

= PVC PIPES Ø160mm

= PVC PIPES Ø110mm

Notes:
- Shop drawings to be produced based on site location for engineers approval.

-Approximate Network Length = 79.9m

-Approximate Gutter Length =44.8m

-Approximate Pipe Network Length (Diameter 160mm) = 4.6m

-Approximate Pipe Network Length (Diameter 110mm) = 75.3m

REV. NO.	Date	Revision Description	Drawn	Chkd	Appd.

Title:
Consultancy Services for Survey, Design and EIA works of Water Supply and Sewerage Facilities in 5 islands, Maldives - Package 6

Sub Title:
Water Supply System in L.Kunahandhoo

Client:
Ministry of National Planning, Housing and Infrastructure, Republic of Maldives

EPOCH ASSOCIATES

T: +960 333 3528
E: info@epoch.associates
W: wwww.epoch.associates
A: G. Rosary West,
Husnuheenaa Magu, Male', Maldives

FEEDBACK INFRA
Making Infrastructure Happen

Drawn: F.I.A.
Checked: M.S.S.
Designed: F.I.A.
Approved: I.W.
Date: Aug 2020
SCALE (A3): 1:20
Project No: EP-WS/2019/06
Rev: R-01
Page: W-27

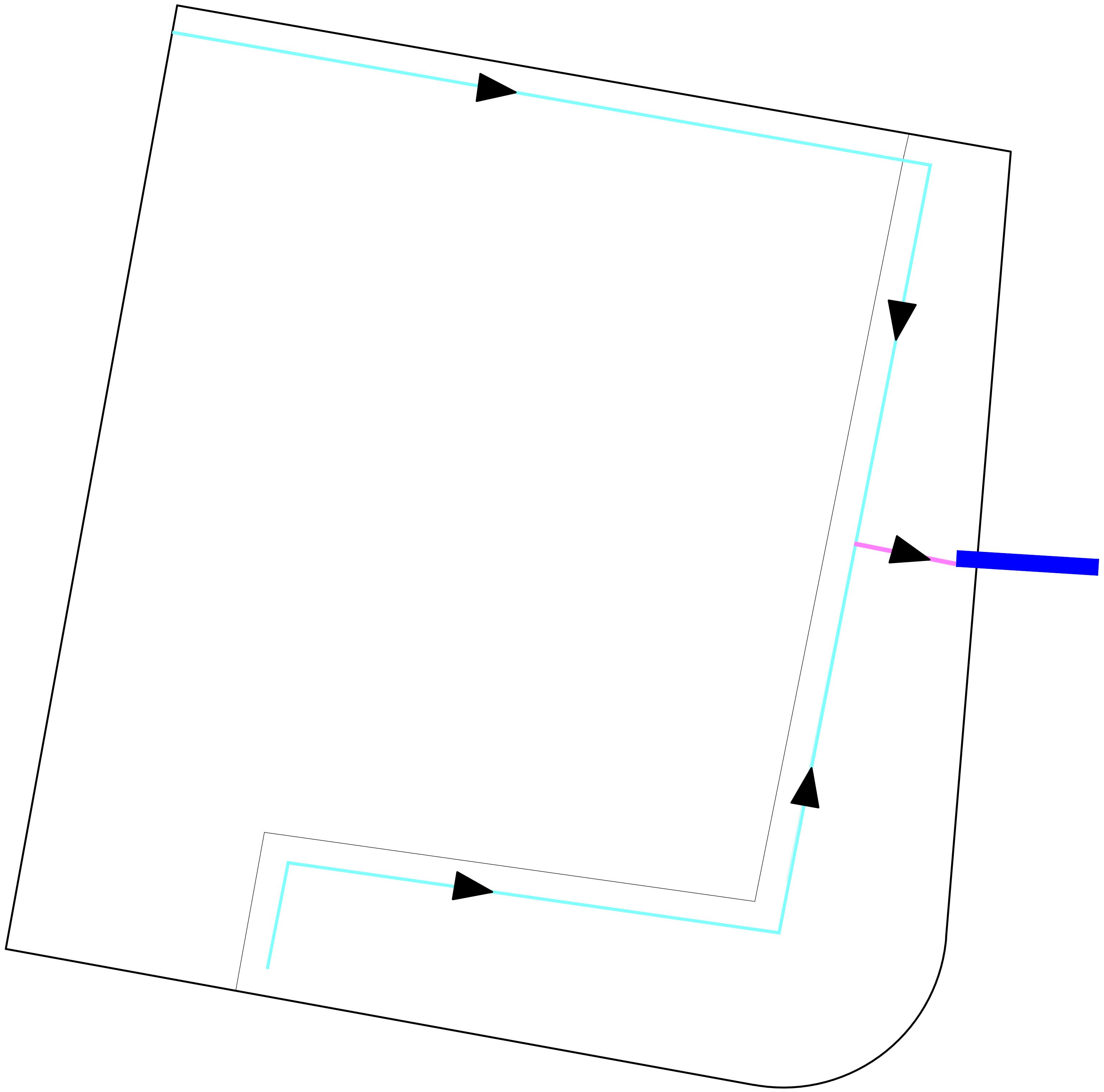

INTERNAL NETWORK LAYOUT- MOSQUE

1:100

N

Legend

— = PVC PIPES Ø160mm

— = PVC PIPES Ø110mm

Notes:
- Shop drawings to be produced based on site location for engineers approval.

-Approximate Network Length = 46.4m

-Approximate Gutter Length =27.1m

-Approximate Pipe Network Length (Diameter 160mm) = 2m

-Approximate Pipe Network Length (Diameter 110mm) = 39.6m

REV. NO.	Date	Revision Description	Drawn	Chkd	Appd.

Title:
Consultancy Services for Survey, Design and EIA works of Water Supply and Sewerage Facilities in 5 islands, Maldives - Package 6

Sub Title:
Water Supply System in L.Kunahandhoo

Client:
Ministry of National Planning, Housing and Infrastructure, Republic of Maldives

EPOCH ASSOCIATES

T: +960 333 3528
E: info@epoch.associates
W: wwww.epoch.associates
A: G. Rosary West,
Husnuheenaa Magu, Male', Maldives

FEEDBACK INFRA
Making Infrastructure Happen

Drawn:	F.I.A.	Checked:	M.S.S.
Designed:	F.I.A.	Approved:	I.W.
Date:	Aug 2020	SCALE (A3):	1:20

Project No: EP-WS/2019/06

Rev: R-01

Page: W-28

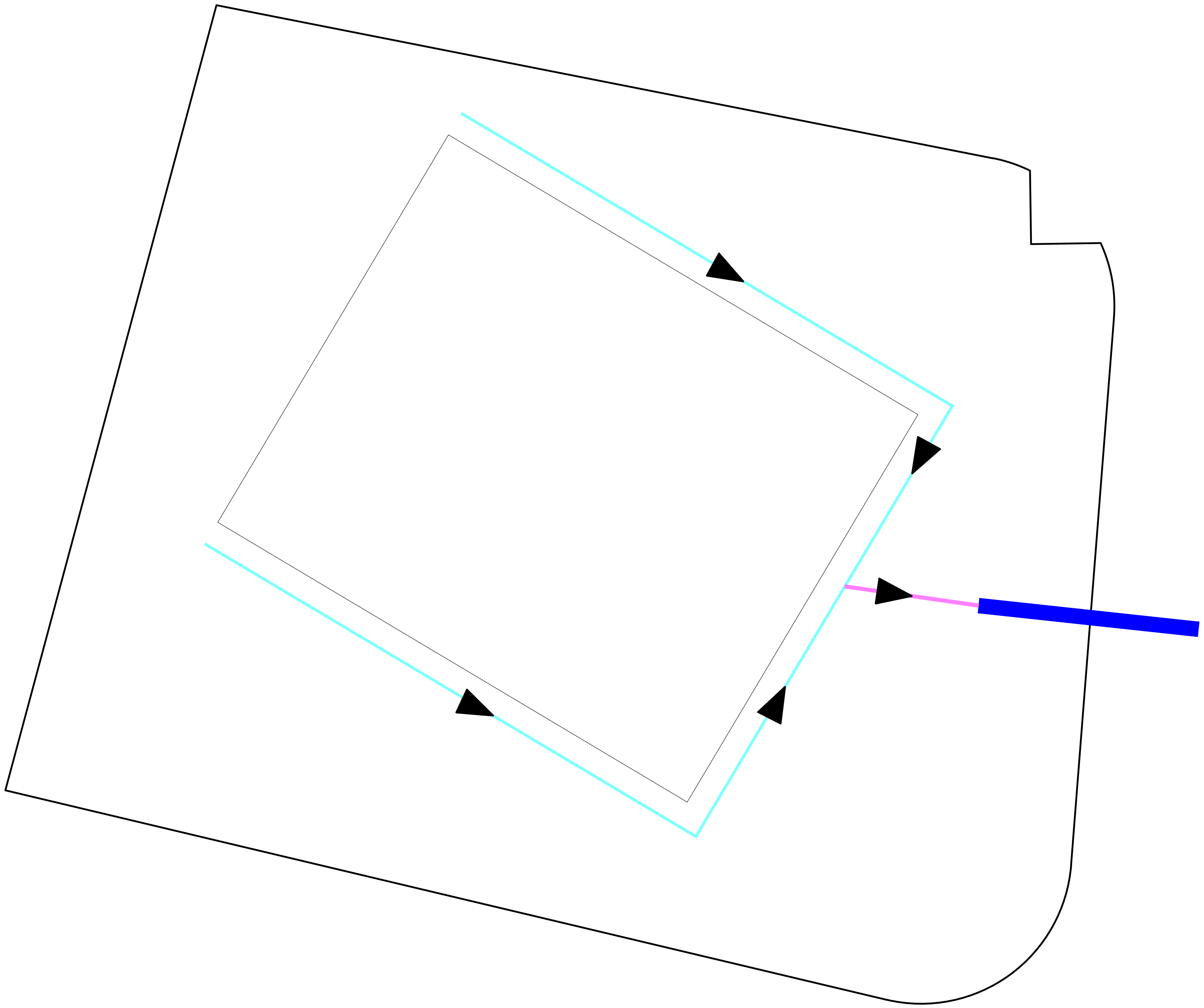

INTERNAL NETWORK LAYOUT- HUKURU MOSQUE

1:100

Legend

— = PVC PIPES Ø160mm

— = PVC PIPES Ø110mm

Notes:
- Shop drawings to be produced based on site location for engineers approval.

-Approximate Network Length = 35.5m

-Approximate Gutter Length =21.8m

-Approximate Pipe Network Length (Diameter 160mm) = 2.7m

-Approximate Pipe Network Length (Diameter 110mm) = 32.8m

REV. NO.	Date	Revision Description	Drawn	Chkd	Appd.

Title:
Consultancy Services for Survey, Design and EIA works of Water Supply and Sewerage Facilities in 5 islands, Maldives - Package 6

Sub Title:
Water Supply System in L.Kunahandhoo

Client:
Ministry of National Planning, Housing and Infrastructure, Republic of Maldives

EPOCH ASSOCIATES
T: +960 333 3528
E: info@epoch.associates
W: wwww.epoch.associates
A: G. Rosary West,
Husnuheenaa Magu, Male', Maldives

FEEDBACK INFRA
Making Infrastructure Happen

Drawn:	F.I.A.	Checked:	M.S.S.
Designed:	F.I.A.	Approved:	I.W.
Date:	Aug 2020	SCALE (A3):	1:20
Project No:	EP-WS/2019/06		
Rev:	R-01	Page:	W-29

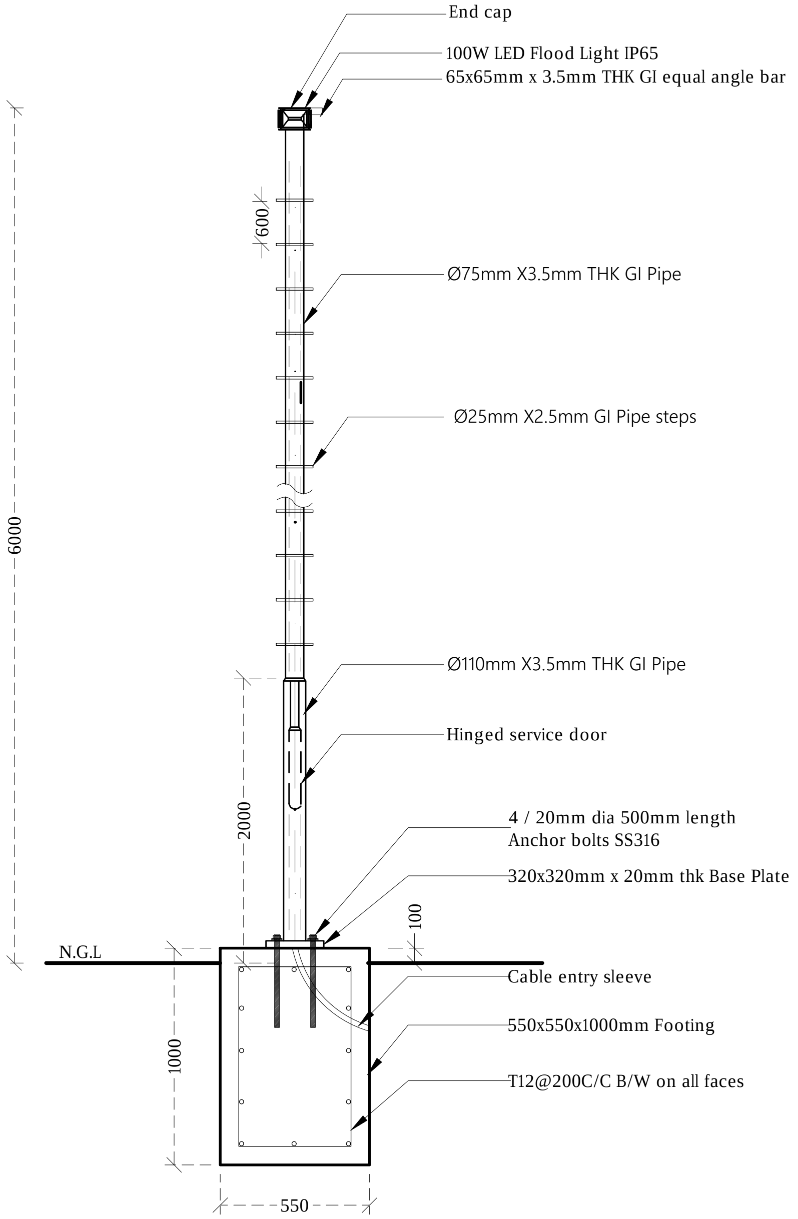
End cap
100W LED Flood Light IP65
65x65mm x 3.5mm THK GI equal angle bar
600
Ø75mm X3.5mm THK GI Pipe
Ø25mm X2.5mm GI Pipe steps
6000
Ø110mm X3.5mm THK GI Pipe
Hinged service door
2000
4 / 20mm dia 500mm length
Anchor bolts SS316
320x320mm x 20mm thk Base Plate
100
N.G.L
Cable entry sleeve
550x550x1000mm Footing
T12@200C/C B/W on all faces
1000
550

LIGHT POST DETAILS FOR STP COMPOUND (LP1)

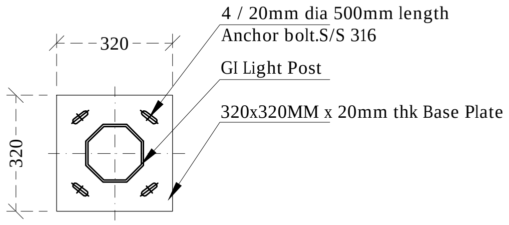
4 / 20mm dia 500mm length
Anchor bolt.S/S 316
GI Light Post
320x320MM x 20mm thk Base Plate
320
320

BASE PLATE (LP1)

NOTE:
- CONCRETE COVER :50mm
- All steel members and GI SHS to be applied with 2 coats of anti-corrosive paint with epoxy finishing paint

LIGHT POST DETAILS

NTS

Legend

Notes:
-Light posts shall be galvanized (minimum 200 micron) and finished with epoxy paint.
All structural concrete shall be of grade C25.
-All castings shall be done using sulphate resistant portland cement to BS 4027:1996.
-All structural reinforcement shall be epoxy coating of non-pre-stressed reinforcement to ASTM-A775/A775M.
-A cover of 50mm should be given for all reinforcements.
-All steel members and GI SHS to be applied with 2 coats of anti-corrosive paint with epoxy finishing paint.
-All anchor bolts shall be SS316

REV. NO.	Date	Revision Description	Drawn	Chkd	Appd.

Title:
Consultancy Services for Survey, Design and EIA works of Water Supply and Sewerage Facilities in 5 islands, Maldives - Package 6

Sub Title:
Water Supply System in L.Kunahandhoo

Client:
Ministry of National Planning, Housing and Infrastructure, Republic of Maldives

EPOCH ASSOCIATES
T: +960 333 3528
E: info@epoch.associates
W: wwww.epoch.associates
A: G. Rosary West,
Husnuheenaa Magu, Male', Maldives

FEEDBACK INFRA
Making Infrastructure Happen

Drawn: F.I.A.
Checked: M.S.S.
Designed: F.I.A.
Approved: I.W.
Date: Aug 2020
SCALE (A3): 1:20
Project No: EP-WS/2019/06
Rev: R-01
Page: W-30

ARCHITECTURAL AND STRUCTURAL DRAWINGS OF

PROPOSED SINGLE STOREY BUILDING AT

RO PLANT ADMIN BUILDING & VEHICLE SHED, L.KUNAHANDHOO

For Ministry of National Planning, Housing and Infrastructure

CONTENTS

Location Plan	A.1 (1)
Site Plan	A.1 (2)
ARCHITECTURAL DRAWINGS (ADMIN BUILDING)	
Ground Floor Plan	A.2 (1)
Roof Plan	A.2 (2)
Elevations	A.3 (1)
Section	A.4 (1)
Doors & Windows Schedule -1	A.5 (1)
Doors & Windows Schedule -2	A.5 (2)
Typical Ground Slab Detail	A.D (1)
Typical Opening Detail	A.D (1)
Typical Wall Construction Detail	A.D (2)
Boundary Wall Detail	A.D (3)
Gate Details	A.D (4)
STRUCTURAL DRAWINGS (ADMIN BUILDING)	
Column Layout Plan	S.1 (1)
Foundation Plan	S.2 (1)
Roof Beam Plan	S.3 (1)
Roof Truss Plan	S.3 (2)
Roof Framing Plan	S.3 (3)
Structural Details	S.D (1)
Truss Detail TR1	S.D (2)
Detail A	S.D (3)
ARCHITECTURAL DRAWINGS (VEHICLE SHED)	
Ground Floor Plan	A.6 (1)
Roof Plan	A.6 (1)
Elevations	A.6 (2)
Section	A.6 (2)
STRUCTURAL DRAWINGS (VEHICLE SHED)	
Foundation Plan	S.4 (1)
Roof Truss Plan	S.4 (2)
Roof Framing Plan	S.D (4)

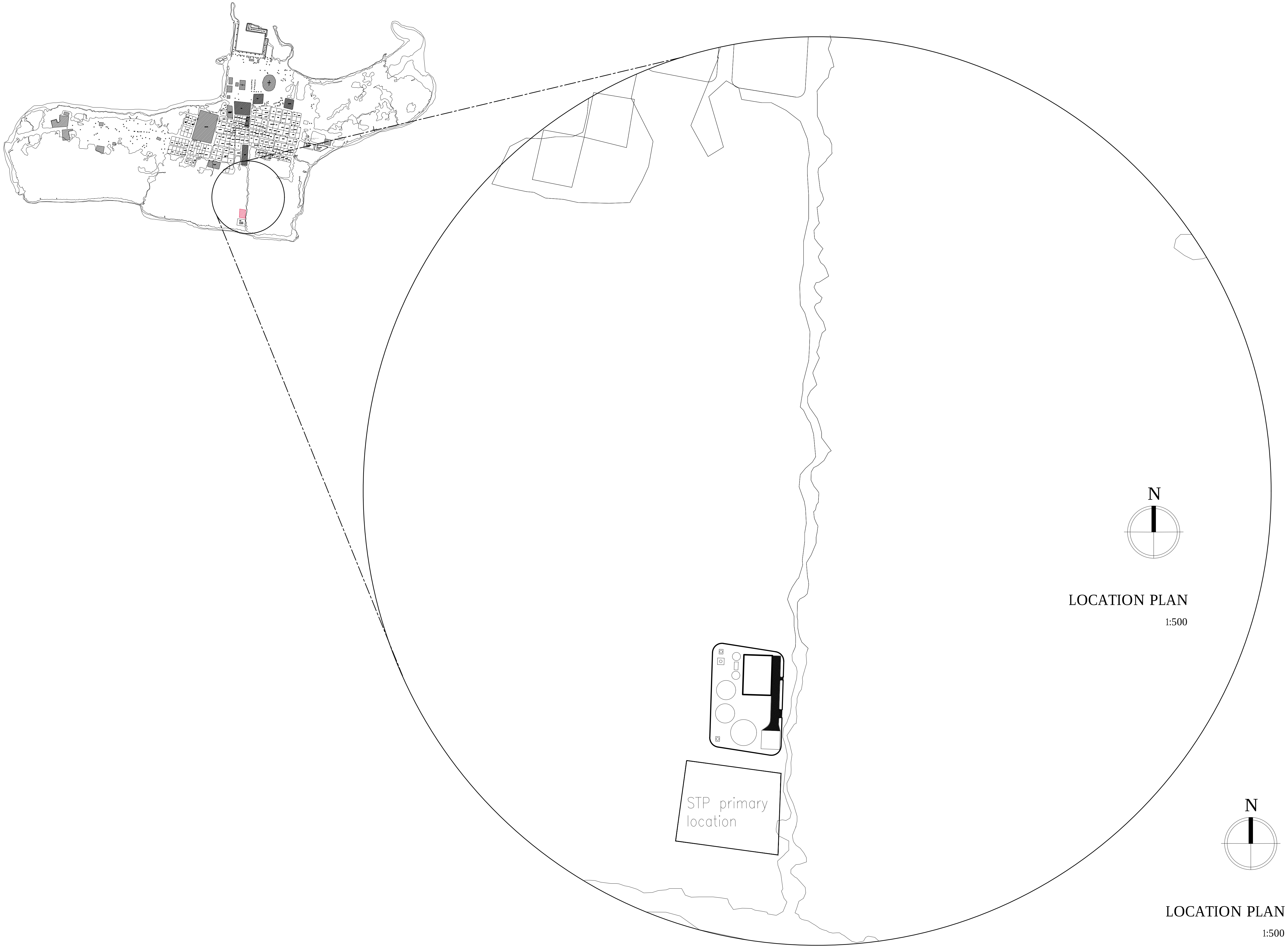

LOCATION PLAN

1:500

LOCATION PLAN

1:500

Legend

Note:

REV. NO.	Date	Revision Description	Drawn	Chkd	Appd.
R01	NOV 2020		A.S.A.	F.I.A.	M.H.

Title:

Consultancy Services for Survey, Design and EIA works of Water Supply and Sewerage Facilities in 6 Islands, Maldives – Package 6

Sub Title:

Water Supply System in L.Kunahandhoo

Client:

Ministry of National Planning, Housing and Infrastructure, Republic of Maldives

EPOCH ASSOCIATES

T: +960 333 3528
E: info@epoch.associates
W: wwww.epoch.associates
A: G. Rosary West,
Husnuheenaa Magu, Male', Maldives

FEEDBACK INFRA
Making Infrastructure Happen

Drawn: A.S.A.	Checked: F.I.A.
Designed: A.S.A.	Approved: M.H.
Date: Nov 2020	SCALE (A3): 1:500

Project No: EP-WS/2019/06

Rev: R-01

Page: A.1 (1)

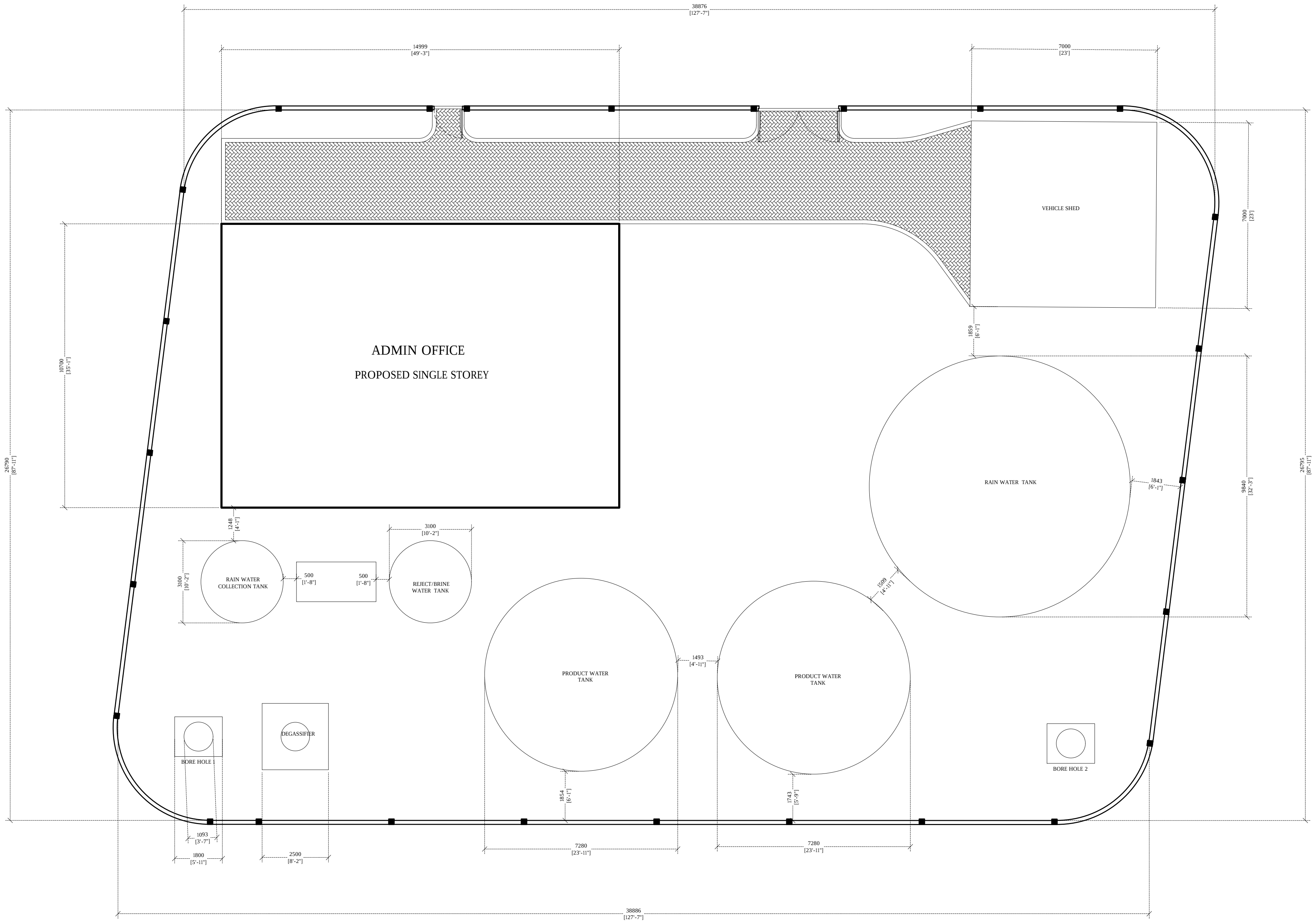
38876
[127'-7"]
14999
[49'-3"]
7000
[23']
VEHICLE SHED
7000
[23']
ADMIN OFFICE
PROPOSED SINGLE STOREY
26790
[87'-11"]
10700
[35'-1"]
1859
[6'-1"]
RAIN WATER TANK
1843
[6'-1"]
9840
[32'-3"]
26795
[87'-11"]
1248
[4'-1"]
3100
[10'-2"]
3100
[10'-2"]
RAIN WATER
COLLECTION TANK
500
[1'-8"]
500
[1'-8"]
REJECT/BRINE
WATER TANK
1509
[4'-11"]
1493
[4'-11"]
PRODUCT WATER
TANK
PRODUCT WATER
TANK
BORE HOLE 1
DEGASSIFIER
BORE HOLE 2
1854
[6'-1"]
1743
[5'-9"]
1093
[3'-7"]
1800
[5'-11"]
2500
[8'-2"]
7280
[23'-11"]
7280
[23'-11"]
38886
[127'-7"]

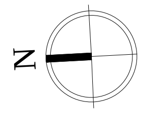

SITE PLAN

1:200

Legend

Note:

R01	NOV 2020		A.S.A.	F.I.A.	M.H.
REV. NO.	Date	Revision Description	Drawn	Chkd	Appd.

Title:

Consultancy Services for
Survey, Design and EIA works of
Water Supply and Sewerage
Facilities
in 6 Islands, Maldives – Package 6

Sub Title:
Water Supply System in L.Kunahandhoo

Client:
Ministry of National Planning, Housing and
Infrastructure, Republic of Maldives

EPOCH ASSOCIATES

T: +960 333 3528
E: info@epoch.associates
W: wwww.epoch.associates
A: G. Rosary West,
Husnuheenaa Magu, Male', Maldives

FEEDBACK INFRA
Making Infrastructure Happen

Drawn: A.S.A.
Checked: F.I.A.
Designed: A.S.A.
Approved: M.H.
Date: Nov 2020
SCALE (A3): 1:200
Project No: EP-WS/2019/06
Rev: R-01
Page: A.1 (2)

ARCHITECTURAL AND STRUCTURAL DRAWINGS OF

PROPOSED SINGLE STOREY BUILDING AT

RO PLANT ADMIN BUILDING, L.KUNAHANDHOO

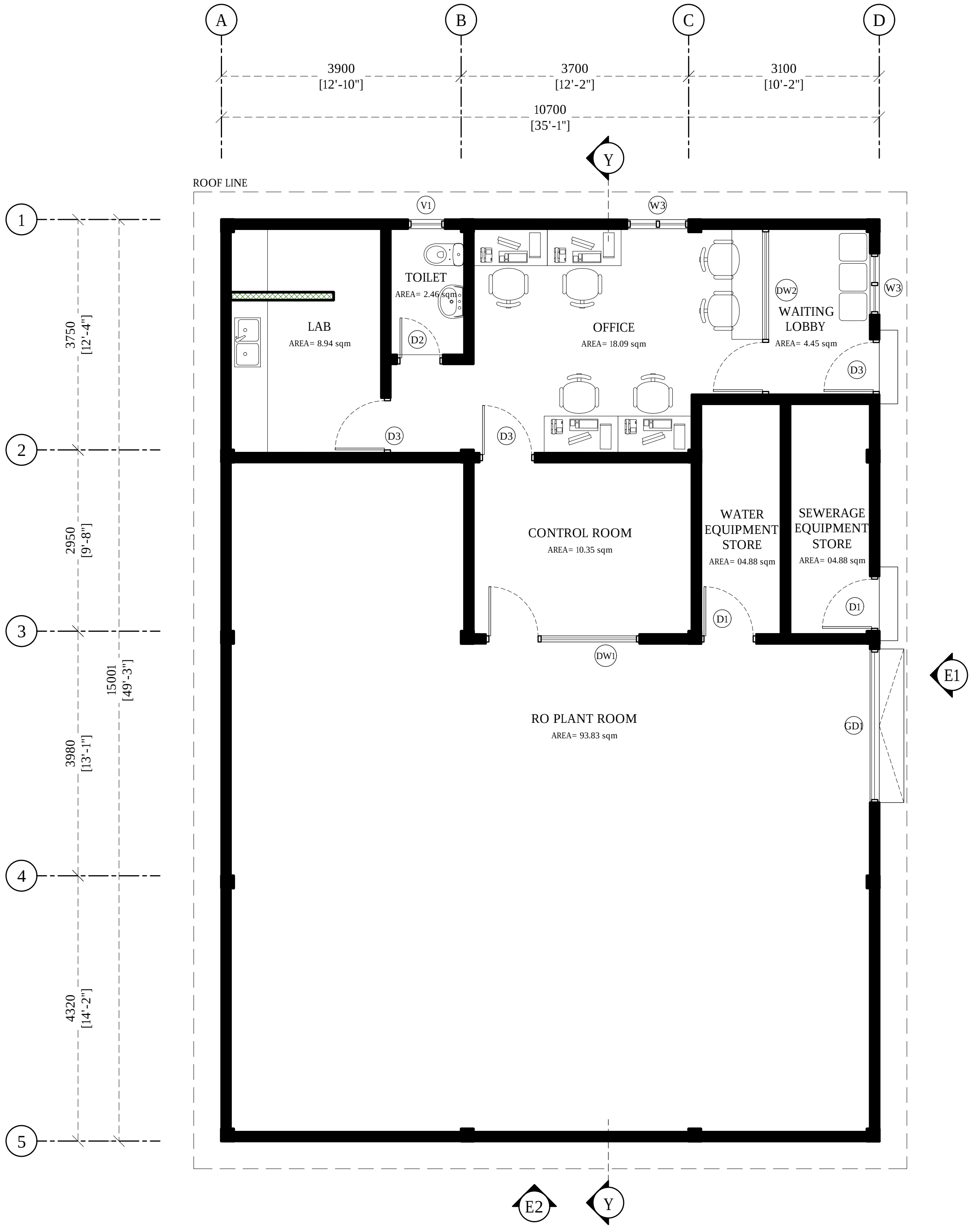
A
B
C
D
3900
[12'-10"]
3700
[12'-2"]
3100
[10'-2"]
10700
[35'-1"]
Y
ROOF LINE
V1
W3
1
2
3
4
5
3750
[12'-4"]
2950
[9'-8"]
3980
[13'-1"]
4320
[14'-2"]
15001
[49'-3"]
TOILET
AREA= 2.46 sqm
D2
LAB
AREA= 8.94 sqm
OFFICE
AREA= 18.09 sqm
DW2
W3
WAITING LOBBY
AREA= 4.45 sqm
D3
D3
D3
CONTROL ROOM
AREA= 10.35 sqm
WATER EQUIPMENT STORE
AREA= 04.88 sqm
SEWERAGE EQUIPMENT STORE
AREA= 04.88 sqm
D1
D1
DW1
E1
RO PLANT ROOM
AREA= 93.83 sqm
GD1
E2
Y

Wall Legend:

■ 150mm thick masonry blocks with 20mm plaster on exterior and 12mm plaster on interior

▨ 100mm thick partition walls up to ceiling level

Wall Finish:

Internal Wall Finish: Easy to wash odour-less Nippon paint Ivory White

External Wall Finish: Weathe rbond Algae guard Nippon September Cream

Toilet and shower walls: 300x300mm ceramic wall lanka tiles up to ceiling height with tile adhesive. use joint filler of appropriate color for grouting joints between tiles

Floor Finish:

Floor Finishes: 600x600mm homogenous floor tiles with tile adhesive unless specified

Toilet Floor Finishes: 300x300mm homogenous non skid floor tiles with tile adhesive unless specified

Notes:

FFL of balconies and toilets should be 25mm lower than the FFL of respective floors

Water proofing to be applied in toilets, balconies and roof terrace prior to tiling

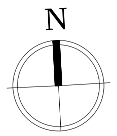

GROUND FLOOR PLAN

1:100

Legend

Note:

R01	NOV 2020		A.S.A.	F.I.A.	M.H.
REV. NO.	Date	Revision Description	Drawn	Chkd	Appd.

Title:
Consultancy Services for Survey, Design and EIA works of Water Supply and Sewerage Facilities
in 6 Islands, Maldives – Package 6
Sub Title:
Water Supply System in L.Kunahandhoo

Client:
Ministry of National Planning, Housing and Infrastructure, Republic of Maldives

EPOCH ASSOCIATES
T: +960 333 3528
E: info@epoch.associates
W: wwww.epoch.associates
A: G. Rosary West,
Husnuheenaa Magu, Male', Maldives

FEEDBACK INFRA
Making Infrastructure Happen

Drawn: A.S.A.
Checked: F.I.A.
Designed: A.S.A.
Approved: M.H.
Date: Nov 2020
SCALE (A3): 1:100
Project No: EP-WS/2019/06
Rev: R-01
Page: A.2 (1)

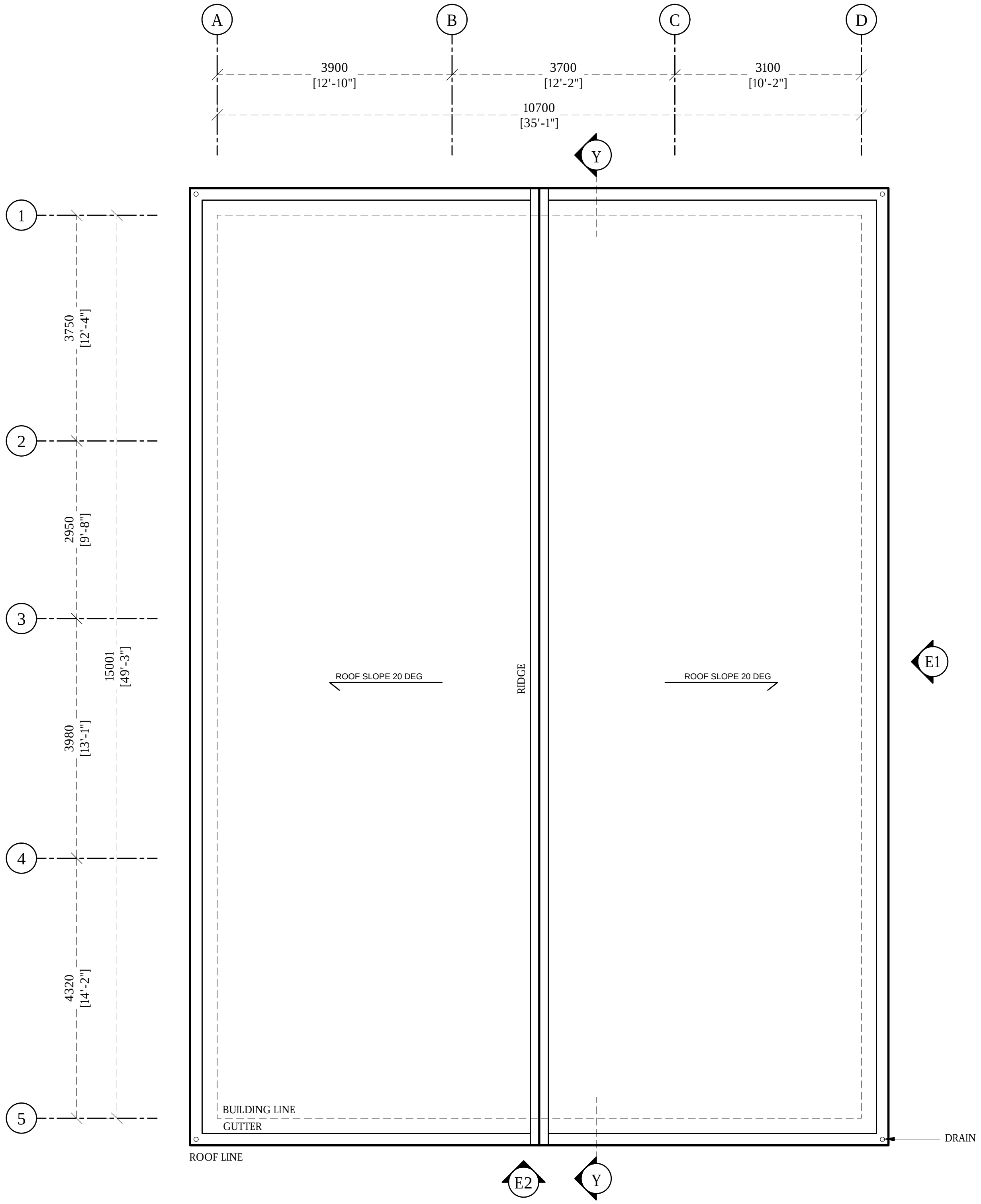
A
B
C
D
3900
[12'-10"]
3700
[12'-2"]
3100
[10'-2"]
10700
[35'-1"]
Y
1
2
3
4
5
3750
[12'-4"]
2950
[9'-8"]
3980
[13'-1"]
4320
[14'-2"]
15001
[49'-3"]
ROOF SLOPE 20 DEG
RIDGE
ROOF SLOPE 20 DEG
E1
BUILDING LINE
GUTTER
ROOF LINE
DRAIN
E2
Y

Legend

Note:

R01	NOV 2020		A.S.A.	F.I.A.	M.H.
REV. NO.	Date	Revision Description	Drawn	Chkd	Appd.

Title:
Consultancy Services for
Survey, Design and EIA works of
Water Supply and Sewerage
Facilities
in 6 Islands, Maldives – Package 6
Sub Title:
Water Supply System in L.Kunahandhoo

Client:
Ministry of National Planning, Housing and
Infrastructure, Republic of Maldives

EPOCH ASSOCIATES
T: +960 333 3528
E: info@epoch.associates
W: wwww.epoch.associates
A: G. Rosary West,
Husnuheenaa Magu, Male', Maldives

FEEDBACK INFRA
Making Infrastructure Happen

Drawn: A.S.A.
Checked: F.I.A.
Designed: A.S.A.
Approved: M.H.
Date: Nov 2020
SCALE (A3): 1:100
Project No: EP-WS/2019/06
Rev: R-01
Page: A.2 (2)

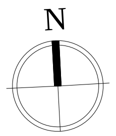

ROOF PLAN

1:100

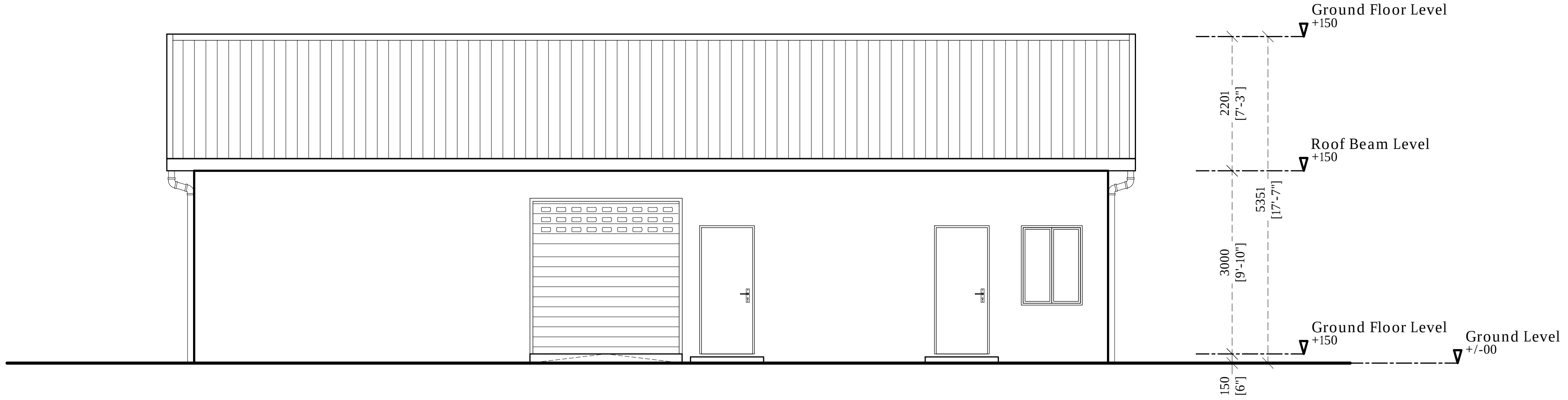
Ground Floor Level
+150
2201
[7'-3"]
Roof Beam Level
+150
5351
[17'-7"]
3000
[9'-10"]
Ground Floor Level
+150
Ground Level
+/-00
150
[6"]

ELEVATION E1

1:100

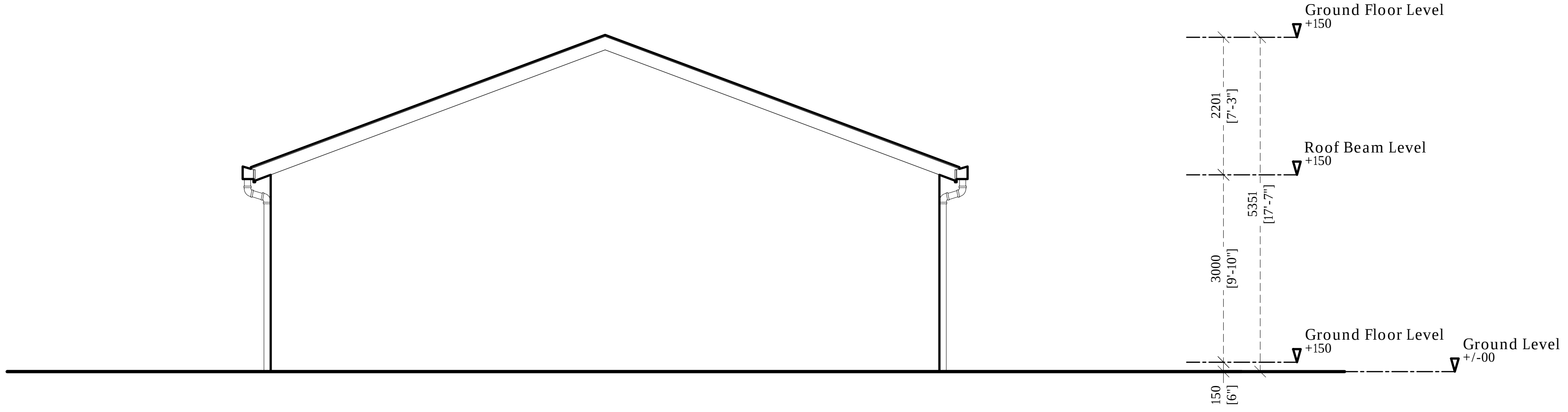
Ground Floor Level
+150
2201
[7'-3"]
Roof Beam Level
+150
5351
[17'-7"]
3000
[9'-10"]
Ground Floor Level
+150
Ground Level
+/-00
150
[6"]

ELEVATION E2

1:100

ELEVATIONS

1:100

Legend

Note:

R01	NOV 2020		A.S.A.	F.I.A.	M.H.
REV. NO.	Date	Revision Description	Drawn	Chkd	Appd.

Title:
Consultancy Services for
Survey, Design and EIA works of
Water Supply and Sewerage
Facilities
in 6 Islands, Maldives – Package 6
Sub Title:
Water Supply System in L.Kunahandhoo

Client:
Ministry of National Planning, Housing and
Infrastructure, Republic of Maldives

EPOCH ASSOCIATES
T: +960 333 3528
E: info@epoch.associates
W: wwww.epoch.associates
A: G. Rosary West,
Husnuheenaa Magu, Male', Maldives

FEEDBACK INFRA
Making Infrastructure Happen

Drawn: A.S.A.
Checked: F.I.A.
Designed: A.S.A.
Approved: M.H.
Date: Nov 2020
SCALE (A3): 1:100
Project No: EP-WS/2019/06
Rev: R-01
Page: A.3 (1)

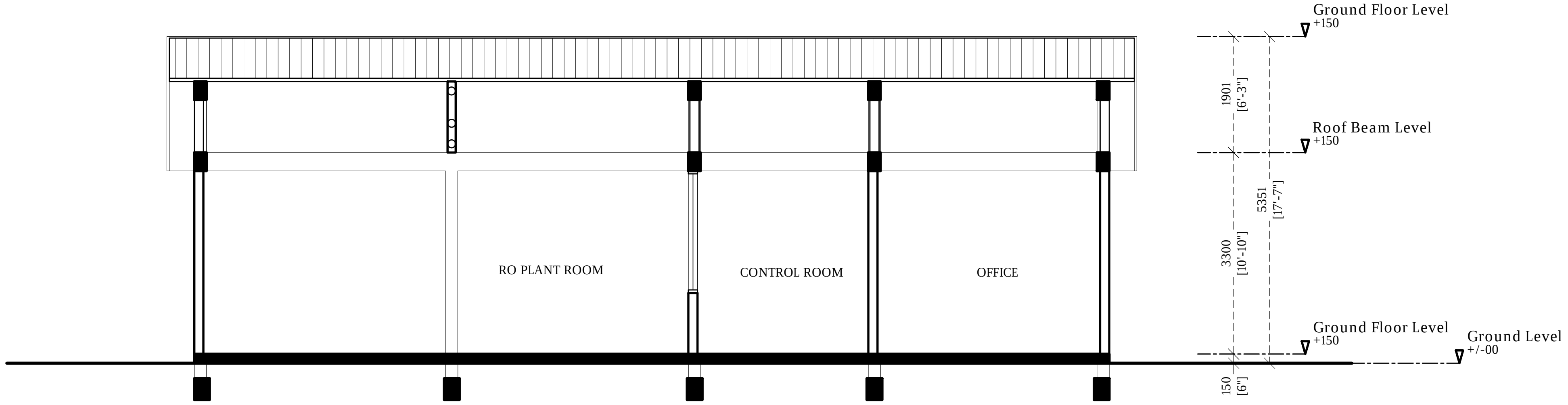
Ground Floor Level
+150
Roof Beam Level
+150
Ground Floor Level
+150
Ground Level
+/-00
1901
[6'-3"]
3300
[10'-10"]
5351
[17'-7"]
150
[6"]
RO PLANT ROOM
CONTROL ROOM
OFFICE

SECTION XX

1:100

Legend

Note:

R01	NOV 2020		A.S.A.	F.I.A.	M.H.
REV. NO.	Date	Revision Description	Drawn	Chkd	Appd.

Title:

Consultancy Services for Survey, Design and EIA works of Water Supply and Sewerage Facilities
in 6 Islands, Maldives – Package 6

Sub Title:

Water Supply System in L.Kunahandhoo

Client:

Ministry of National Planning, Housing and Infrastructure, Republic of Maldives

EPOCH ASSOCIATES
T: +960 333 3528
E: info@epoch.associates
W: wwww.epoch.associates
A: G. Rosary West,
Husnuheenaa Magu, Male', Maldives

FEEDBACK INFRA
Making Infrastructure Happen

Drawn: A.S.A.
Checked: F.I.A.
Designed: A.S.A.
Approved: M.H.
Date: Nov 2020
SCALE (A3): 1:100
Project No: EP-WS/2019/06
Rev: R-01
Page: A.4(1)

SECTION

1:100

Door ID	D1	D2	D3	GD1
Plan view	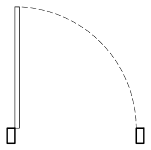	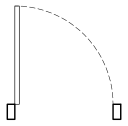	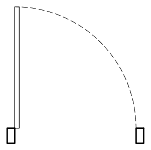	
Elevation view	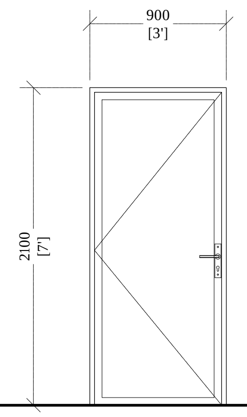	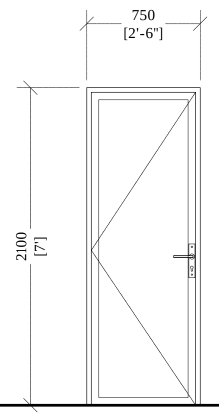	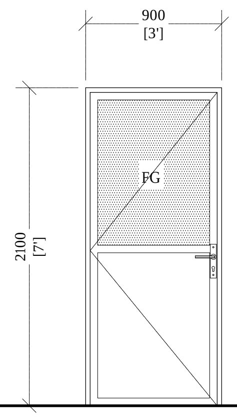	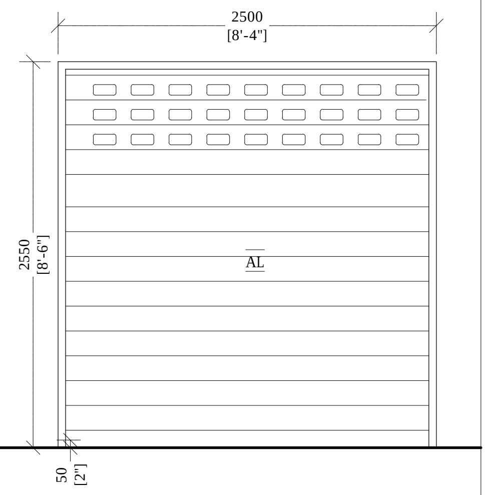
Frame material	Aluminum black powder coated	Aluminum black powder coated	Aluminum black powder coated	Aluminum framed roller shutter
Panel material	Aluminum cladding sheet	Aluminum cladding sheet	Aluminum cladding sheet & Fixed clear glass	Aluminium
Openable area	1.74	1.45	1.74	6.0

FFL

General Notes:

Dimensions shown on DWG indicate effective openings of frame

All frame depths are 100mm
All dor panel thicknesses are 35mm
All window manel thickness are 25mm
Al frame edges shal be trimmed 3mm

All wodden components should be wood stained finish

All glazing should be of 6mm unless specified

External units must comply the following weather conditions:-
Wind pressure: 200 kg/sqm
Water tightness: 25 kg/sqm

All external frames / wall joints must be sealed with silicon sealant and the wedges trimmed with 12X12mm hardwood beading fixed to frames by brass nails

All hardware should be provided for the performance of al functions of the units

Hinges shall confirm to
1. Door size more than 700X1900mm
   WD: 125mm X2 sets
   SD: 150mm X3 sets
2. Door size less than 700X1900mm
   WD: 100mm X2 sets
   SD: 125mm X2 sets

Locks shall be cylinderical with master key sets

Door knobs shall be1000mm above FFL

DOOR & WINDOW SCHEDULE -1

1:50

Legend

Note:

R01	NOV 2020		A.S.A.	F.I.A.	M.H.
REV. NO.	Date	Revision Description	Drawn	Chkd	Appd.

Title:
Consultancy Services for Survey, Design and EIA works of Water Supply and Sewerage Facilities
in 6 Islands, Maldives – Package 6
Sub Title:
Water Supply System in L.Kunahandhoo

Client:
Ministry of National Planning, Housing and Infrastructure, Republic of Maldives

EPOCH ASSOCIATES
T: +960 333 3528
E: info@epoch.associates
W: wwww.epoch.associates
A: G. Rosary West,
Husnuheenaa Magu, Male', Maldives

FEEDBACK INFRA

Drawn:	A.S.A.	Checked:	F.I.A.
Designed:	A.S.A.	Approved:	M.H.
Date:	Nov 2020	SCALE (A3):	1:50
Project No:	EP-WS/2019/06		
Rev:	R-01	Page:	A.5 (1)

Door ID	DW 1	DW 2	W2
Plan view	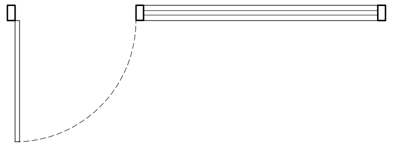	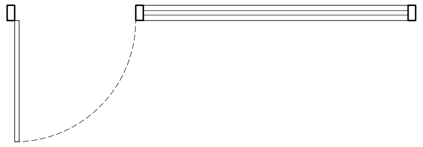	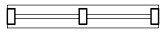
Elevation view	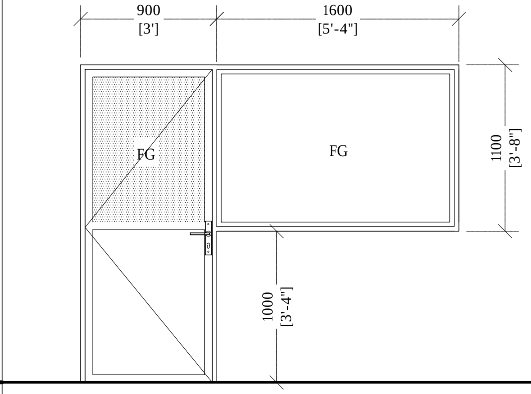 900 [3'] 1600 [5'-4"] FG FG 1100 [3'-8"] 1000 [3'-4"] FFL	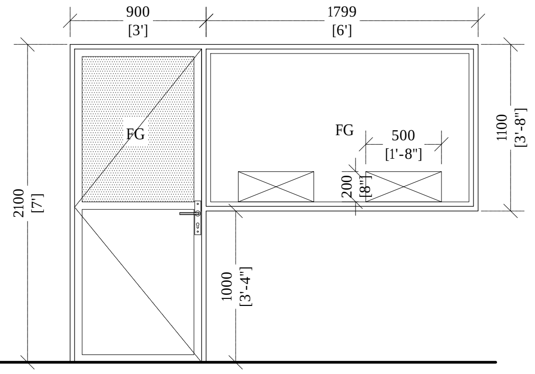 900 [3'] 1799 [6'] FG FG 500 [1'-8"] 200 [8"] 1100 [3'-8"] 2100 [7'] 1000 [3'-4"]	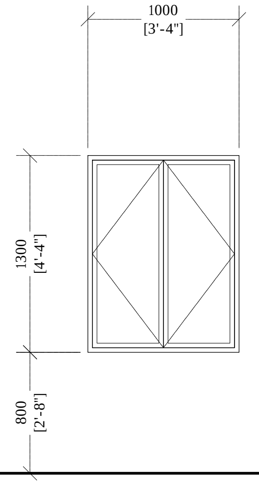
Frame material	Aluminum black powder coated	Aluminum black powder coated	Aluminum black powder coated
Panel material	Aluminum cladding sheet & Fixed clear glass	Aluminum cladding sheet & Fixed clear glass	Reflective Glass
Openable area	-	-	-

Door ID	V1
Plan view	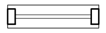
Elevation view	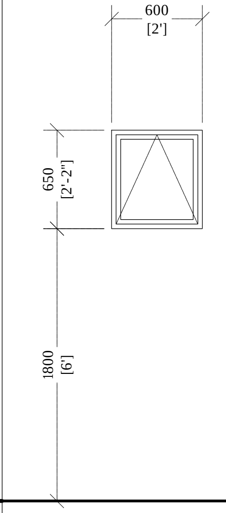
Frame material	Aluminum black powder coated
Panel material	Reflective Glass
Openable area	0.32

General Notes:

Dimensions shown on DWG indicate effective openings of frame

All frame depths are 100mm
All dor panel thicknesses are 35mm
All window manel thickness are 25mm
Al frame edges shal be trimmed 3mm

All wodden components should be wood stained finish

All glazing should be of 6mm unless specified

External units must comply the following weather conditions:-
Wind pressure: 200 kg/sqm
Water tightness: 25 kg/sqm

All external frames / wall joints must be sealed with silicon sealant and the wedges trimmed with 12X12mm hardwood beading fixed to frames by brass nails

All hardware should be provided for the performance of al functions of the units

Hinges shall confirm to
1. Door size more than 700X1900mm
    WD: 125mm X2 sets
    SD: 150mm X3 sets
2. Door size less than 700X1900mm
    WD: 100mm X2 sets
    SD: 125mm X2 sets

Locks shall be cylinderical with master key sets

Door knobs shall be1000mm above FFL

DOOR & WINDOW SCHEDULE -2

1:50

Legend

Note:

R01	NOV 2020		A.S.A.	F.I.A.	M.H.
REV. NO.	Date	Revision Description	Drawn	Chkd	Appd.

Title:
Consultancy Services for Survey, Design and EIA works of Water Supply and Sewerage Facilities
in 6 Islands, Maldives – Package 6
Sub Title:
Water Supply System in L.Kunahandhoo

Client:
Ministry of National Planning, Housing and Infrastructure, Republic of Maldives

EPOCH ASSOCIATES
T: +960 333 3528
E: info@epoch.associates
W: wwww.epoch.associates
A: G. Rosary West,
Husnuheenaa Magu, Male', Maldives

FEEDBACK INFRA
Making Infrastructure Happen

Drawn: A.S.A.
Checked: F.I.A.
Designed: A.S.A.
Approved: M.H.
Date: Nov 2020
SCALE (A3): 1:50
Project No: EP-WS/2019/06
Rev: R-01
Page: A.5 (2)

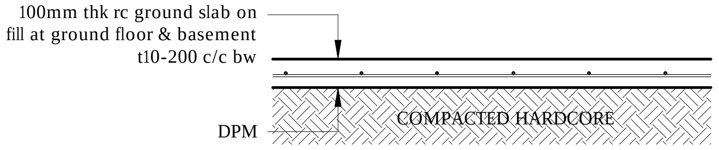
100mm thk rc ground slab on
fill at ground floor & basement
t10-200 c/c bw
DPM
COMPACTED HARDCORE

Note:

- All cover blocks shall be casted using grade C25/30 concrete with 5-10mm aggregates
- For slab, rebar spacer chairs spacing shall be minimum 1m spacing or 1 no. per 1 sqm

TYPICAL GROUND SLAB DETAIL

1:20

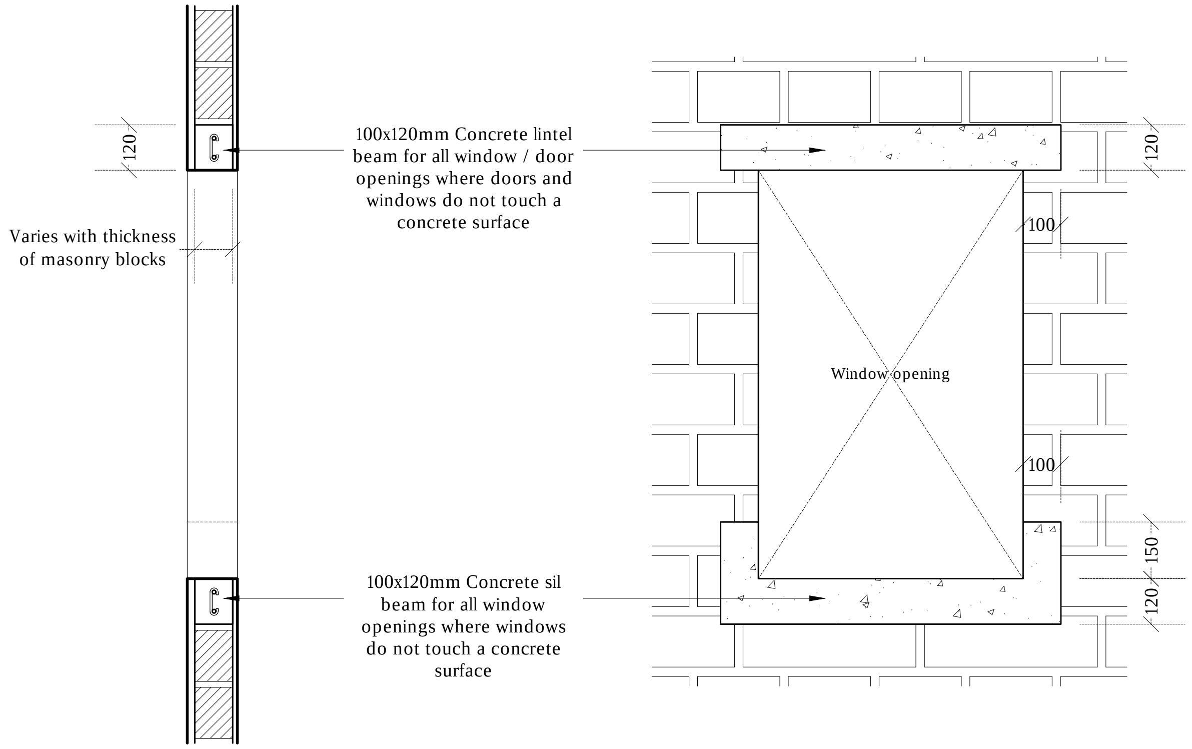
120
Varies with thickness
of masonry blocks
100x120mm Concrete lintel
beam for all window / door
openings where doors and
windows do not touch a
concrete surface
120
100
Window opening
100
150
120
100x120mm Concrete sil
beam for all window
openings where windows
do not touch a concrete
surface

TYPICAL OPENING DETAIL

1:20

Legend

Note:

R01	NOV 2020		A.S.A.	F.I.A.	M.H.
REV. NO.	Date	Revision Description	Drawn	Chkd	Appd.

Title:
Consultancy Services for
Survey, Design and EIA works of
Water Supply and Sewerage
Facilities
in 6 Islands, Maldives – Package 6
Sub Title:
Water Supply System in L.Kunahandhoo

Client:
Ministry of National Planning, Housing and
Infrastructure, Republic of Maldives

EPOCH ASSOCIATES
T: +960 333 3528
E: info@epoch.associates
W: wwww.epoch.associates
A: G. Rosary West,
Husnuheenaa Magu, Male', Maldives

FEEDBACK INFRA
Making Infrastructure Happen

Drawn: A.S.A.
Checked: F.I.A.
Designed: A.S.A.
Approved: M.H.
Date: Nov 2020
SCALE (A3): 1:20
Project No: EP-WS/2019/06
Rev: R-01
Page: A.D (1)

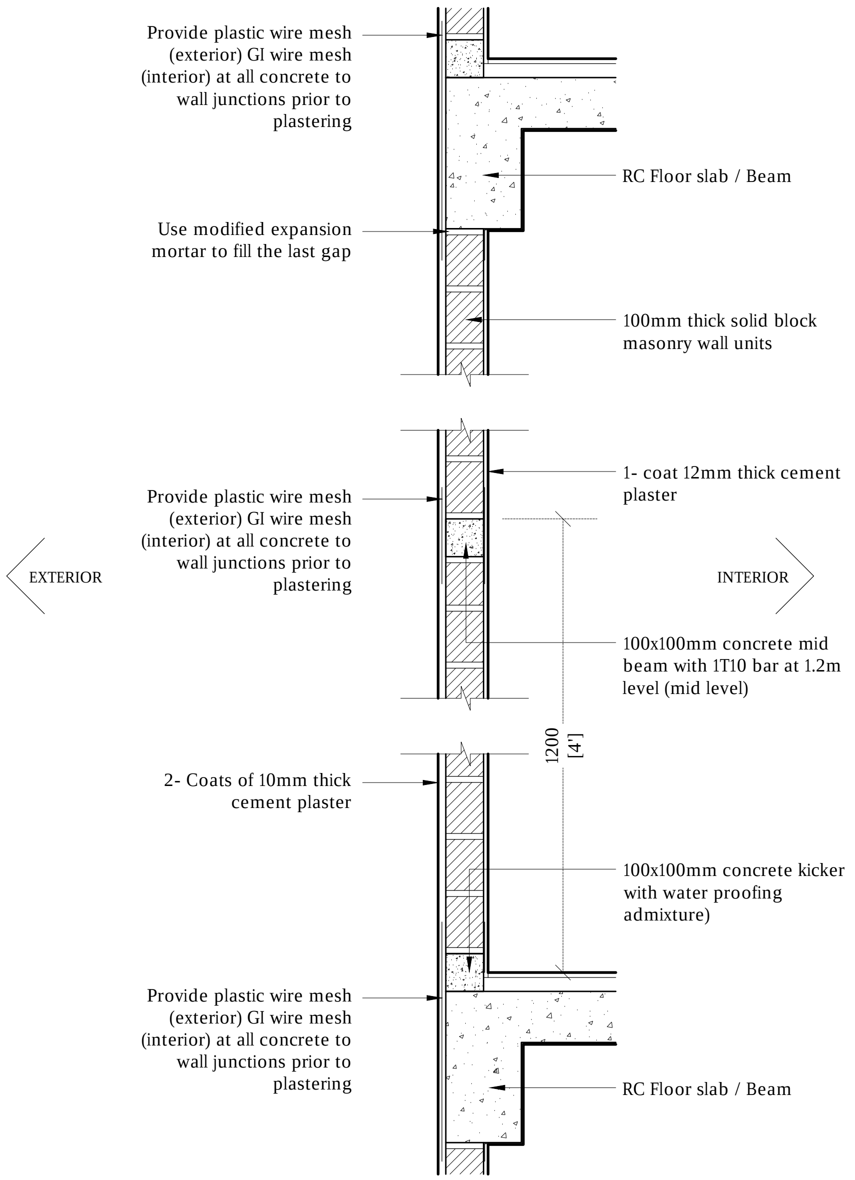
Provide plastic wire mesh (exterior) Gl wire mesh (interior) at all concrete to wall junctions prior to plastering
Use modified expansion mortar to fill the last gap
RC Floor slab / Beam
100mm thick solid block masonry wall units
1- coat 12mm thick cement plaster
Provide plastic wire mesh (exterior) Gl wire mesh (interior) at all concrete to wall junctions prior to plastering
EXTERIOR
INTERIOR
100x100mm concrete mid beam with 1T10 bar at 1.2m level (mid level)
1200
[4']
2- Coats of 10mm thick cement plaster
100x100mm concrete kicker with water proofing admixture)
Provide plastic wire mesh (exterior) Gl wire mesh (interior) at all concrete to wall junctions prior to plastering
RC Floor slab / Beam

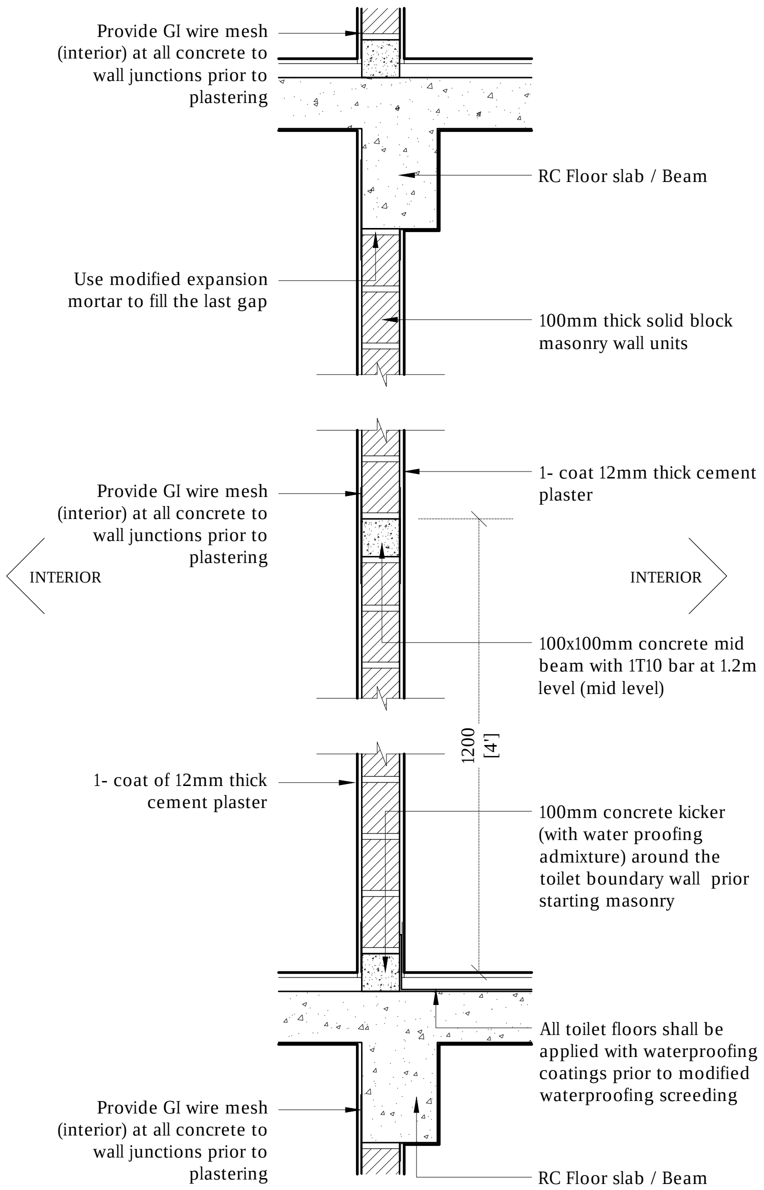
Provide Gl wire mesh (interior) at all concrete to wall junctions prior to plastering
RC Floor slab / Beam
Use modified expansion mortar to fill the last gap
100mm thick solid block masonry wall units
1- coat 12mm thick cement plaster
Provide Gl wire mesh (interior) at all concrete to wall junctions prior to plastering
INTERIOR
INTERIOR
100x100mm concrete mid beam with 1T10 bar at 1.2m level (mid level)
1200
[4']
1- coat of 12mm thick cement plaster
100mm concrete kicker (with water proofing admixture) around the toilet boundary wall prior starting masonry
All toilet floors shall be applied with waterproofing coatings prior to modified waterproofing screeding
Provide Gl wire mesh (interior) at all concrete to wall junctions prior to plastering
RC Floor slab / Beam

Note:

- Concrete surfaces shall be thoroughly cleaned with water & applied with mastercast 141 or equivalent bonding mortar prior to plastering.
- Plastering mortar mix shall be 1:4 (cement: sand) ratio.
- Plaster mix shall be modified using fibre wool & mastercast 141 or equivalent plasticisers as per manufacturer's specification.
- Height of placing blocks shall be maximum 1.2m per day.
- After initial coat of plastering, water curing shall be provided for minimum 3 days & after final coat water curing shall be provided for 7 days.

TYPICAL WALL CONSTRUCTION D

Legend

Note:

R01	NOV 2020		A.S.A.	F.I.A.	M.H.
REV. NO.	Date	Revision Description	Drawn	Chkd	Appd.

Title:
Consultancy Services for
Survey, Design and EIA works of
Water Supply and Sewerage
Facilities
in 6 Islands, Maldives – Package 6
Sub Title:
Water Supply System in L.Kunahandhoo

Client:
Ministry of National Planning, Housing and Infrastructure, Republic of Maldives

T: +960 333 3528
E: info@epoch.associates
W: wwww.epoch.associates
A: G. Rosary West,
Husnuheenaa Magu, Male', Maldives

Drawn: A.S.A.
Checked: F.I.A.
Designed: A.S.A.
Approved: M.H.
Date: Nov 2020
SCALE (A3): 1:20
Project No: EP-WS/2019/06
Rev: R-01
Page: A.D (2)

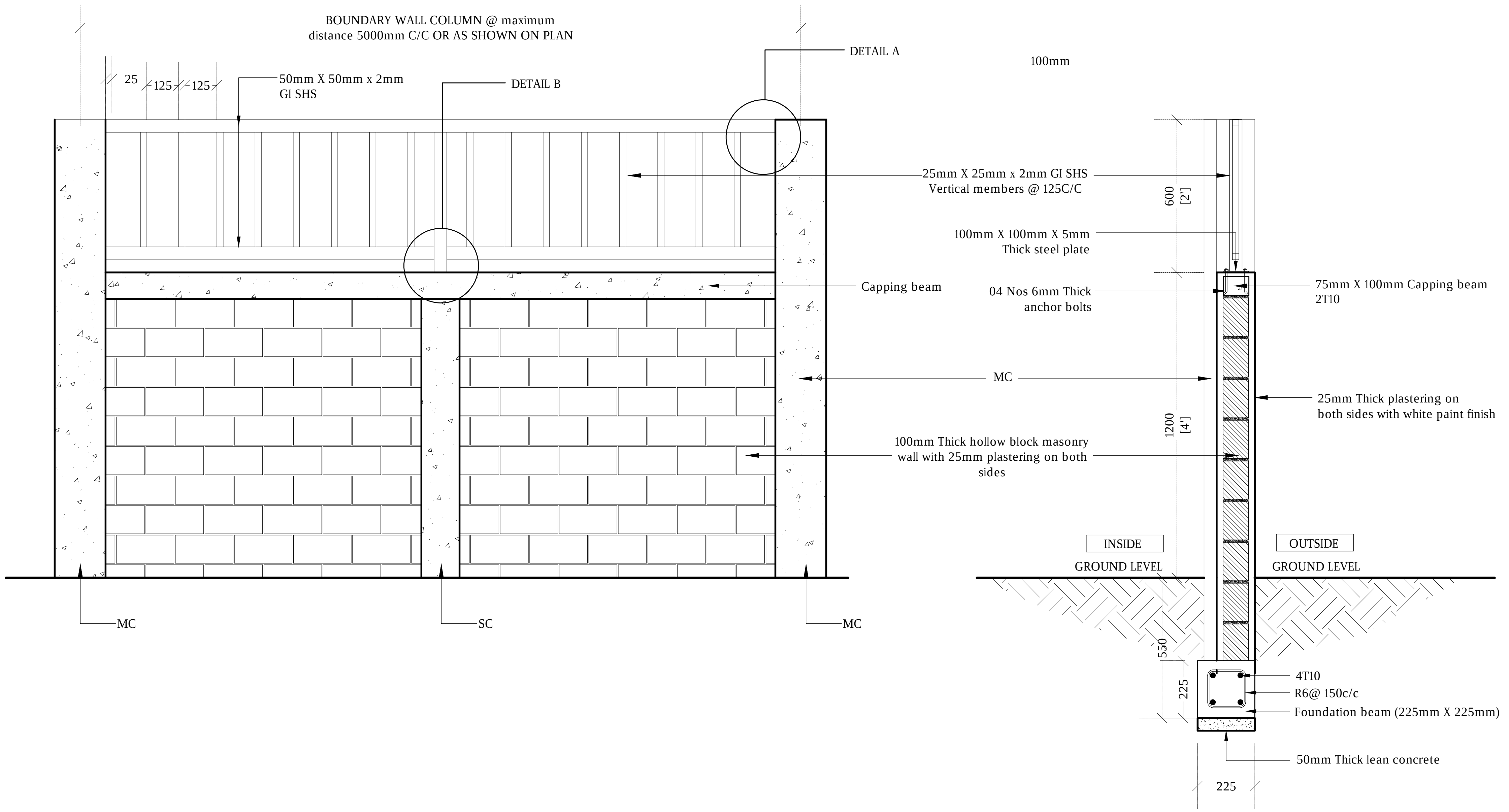
BOUNDARY WALL COLUMN @ maximum distance 5000mm C/C OR AS SHOWN ON PLAN
DETAIL A
DETAIL B
25
125
125
50mm X 50mm x 2mm GI SHS
100mm
25mm X 25mm x 2mm GI SHS Vertical members @ 125C/C
600 [2']
100mm X 100mm X 5mm Thick steel plate
04 Nos 6mm Thick anchor bolts
75mm X 100mm Capping beam 2T10
Capping beam
MC
25mm Thick plastering on both sides with white paint finish
1200 [4']
100mm Thick hollow block masonry wall with 25mm plastering on both sides
INSIDE
OUTSIDE
GROUND LEVEL
GROUND LEVEL
MC
SC
MC
550
225
4T10
R6@ 150c/c
Foundation beam (225mm X 225mm)
50mm Thick lean concrete
225

BOUNDARY WALL DETAIL

1:20

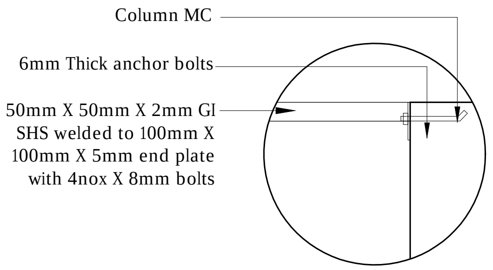
Column MC
6mm Thick anchor bolts
50mm X 50mm X 2mm GI SHS welded to 100mm X 100mm X 5mm end plate with 4nox X 8mm bolts

DETAIL A

1:10

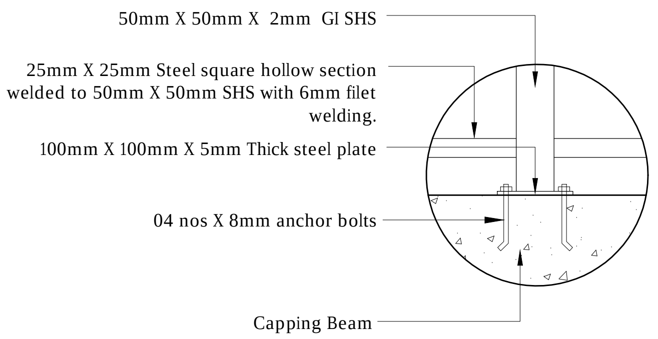
50mm X 50mm X 2mm GI SHS
25mm X 25mm Steel square hollow section welded to 50mm X 50mm SHS with 6mm filet welding.
100mm X 100mm X 5mm Thick steel plate
04 nos X 8mm anchor bolts
Capping Beam

DETAIL B

1:10

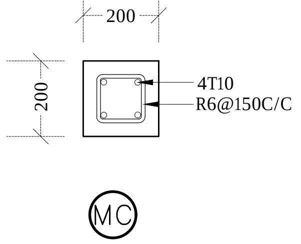
200
200
4T10
R6@150C/C
MC

MAIN COLUMN
@ maximum distance 5000mm C/C

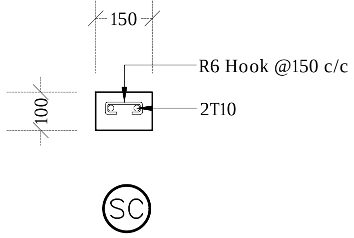
150
100
R6 Hook @150 c/c
2T10
SC

STIFFENER COLUMN
(in between two main columns)

NOTE:
- FRAME MATERIAL : Steel gate frame 2.5mm thick GI sections SHS
- All steel members and GI SHS to be applied with 2 coats of anti-corrosive paint with epoxy finishing paint
- Allowance shall be made to fix pad lock in Gates

Legend

Note:

- FRAME MATERIAL : Steel gate frame 2.5mm thick GI sections SHS
- All steel members and GI SHS to be applied with 2 coats of anti-corrosive paint with epoxy finishing paint
- Allowance shall be made to fix pad lock in Gates
- Cover for foundation beams shall be 50mm
- Cover for columns (MC) shall be 40mm
- Concrete shall be of grade C25
- All concrete cold joints shall casted with bonding agent

R01	NOV 2020		A.S.A.	F.I.A.	M.H.
REV. NO.	Date	Revision Description	Drawn	Chkd	Appd.

Title:
Consultancy Services for
Survey, Design and EIA works of
Water Supply and Sewerage
Facilities
in 6 Islands, Maldives – Package 6
Sub Title:
Water Supply System in L.Kunahandhoo

Client:
Ministry of National Planning, Housing and
Infrastructure, Republic of Maldives

EPOCH ASSOCIATES
T: +960 333 3528
E: info@epoch.associates
W: wwww.epoch.associates
A: G. Rosary West,
Husnuheenaa Magu, Male', Maldives

FEEDBACK INFRA
Making Infrastructure Happen

Drawn: A.S.A.
Checked: F.I.A.
Designed: A.S.A.
Approved: M.H.
Date: Nov 2020
SCALE (A3): 1:20
Project No: EP-WS/2019/06
Rev: R-01
Page: A.D (3)

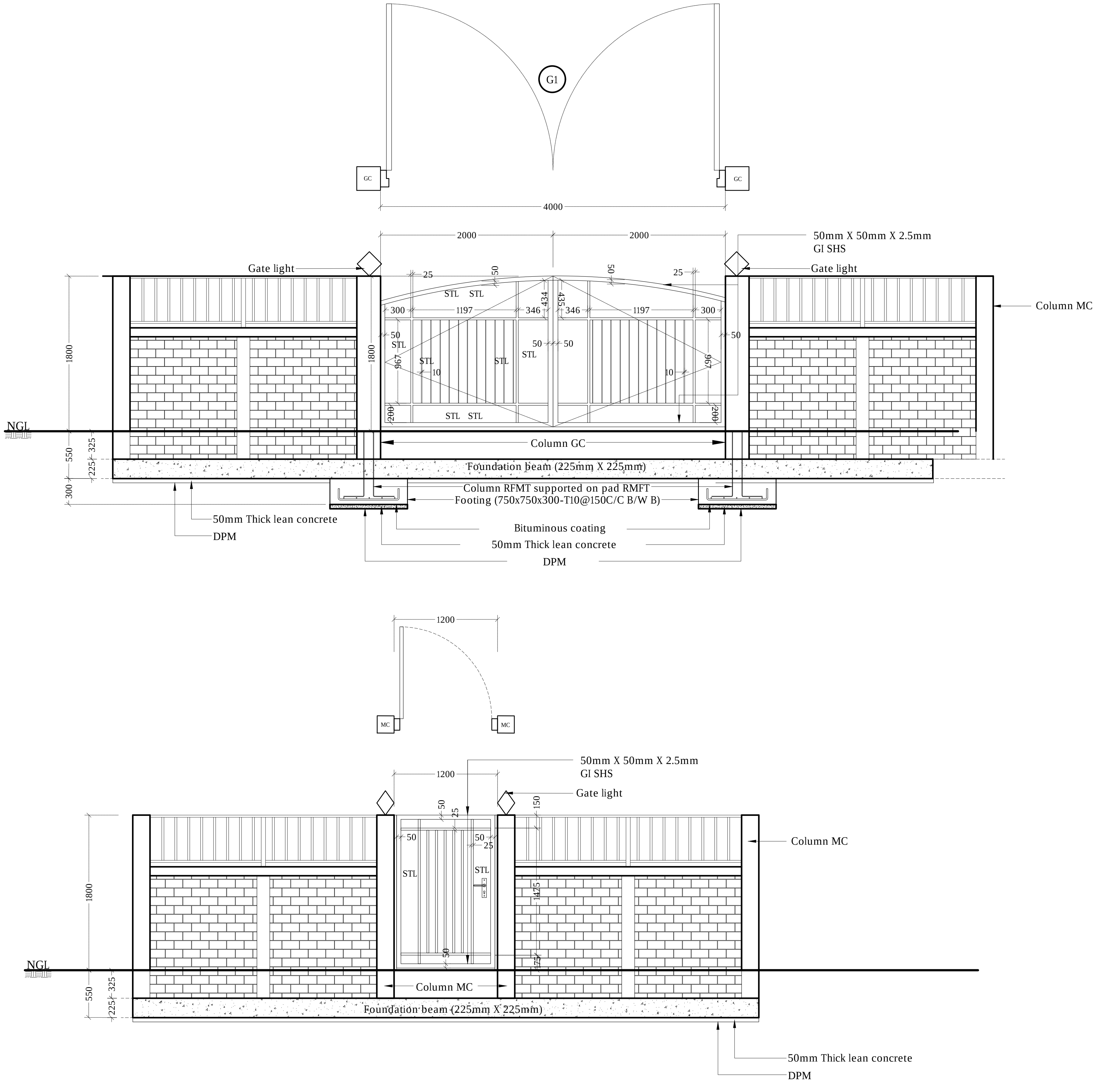
G1
GC
GC
4000
2000
2000
50mm X 50mm X 2.5mm
GI SHS
Gate light
Gate light
Column MC
25
50
50
25
STL
STL
300
1197
346
434
435
346
1197
300
50
STL
50
50
50
STL
STL
STL
967
10
10
967
1800
1800
200
STL
STL
200
NGL
Column GC
Foundation beam (225mm X 225mm)
Column RFMT supported on pad RMFT
Footing (750x750x300-T10@150C/C B/W B)
550
325
225
300
50mm Thick lean concrete
DPM
Bituminous coating
50mm Thick lean concrete
DPM
1200
MC
MC
1200
50mm X 50mm X 2.5mm
GI SHS
Gate light
Column MC
50
25
150
50
50
25
STL
STL
1475
50
125
1800
NGL
Column MC
550
325
225
Foundation beam (225mm X 225mm)
50mm Thick lean concrete
DPM

GATE DETAILS

1:50

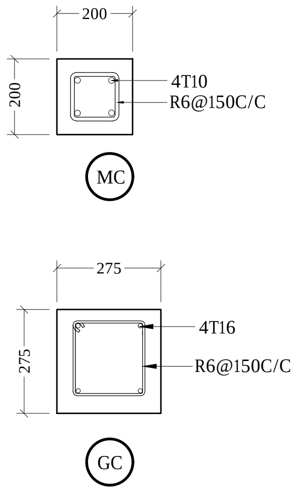
200
200
4T10
R6@150C/C
MC
275
275
4T16
R6@150C/C
GC

COLUMN DETAILS

1:20

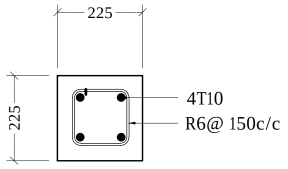
225
225
4T10
R6@ 150c/c

FOUNDATION BEAM DETAIL

1:20

Legend

Note:

- FRAME MATERIAL : Steel gate frame 2.5mm thick GI sections RHS
- PANEL MATERIAL : Steel frame with steel panels (STL) as shown on elevation view
- All steel members and GI SHS to be applied with 2 coats of anti-corrosive paint with epoxy finishing paint
- Allowance shall be made to fix pad lock in Gates
- Cover for foundation pads and foundation beams shall be 50mm
- Cover for columns (GC) and(MC) shall be 40mm
- Concrete shall be of grade C25
- All concrete cold joints shall casted with bonding agent

REV. NO.	Date	Revision Description	Drawn	Chkd	Appd.
R01	NOV 2020		A.S.A.	F.I.A.	M.H.

Title:

Consultancy Services for
Survey, Design and EIA works of
Water Supply and Sewerage
Facilities
in 6 Islands, Maldives – Package 6

Sub Title:
Water Supply System in L.Kunahandhoo

Client:
Ministry of National Planning, Housing and
Infrastructure, Republic of Maldives

EPOCH ASSOCIATES
T: +960 333 3528
E: info@epoch.associates
W: wwww.epoch.associates
A: G. Rosary West,
Husnuheenaa Magu, Male', Maldives

FEEDBACK INFRA

Drawn: A.S.A.
Checked: F.I.A.
Designed: A.S.A.
Approved: M.H.
Date: Nov 2020
SCALE (A3): 1:20
Project No: EP-WS/2019/06
Rev: R-01
Page: A.D (4)

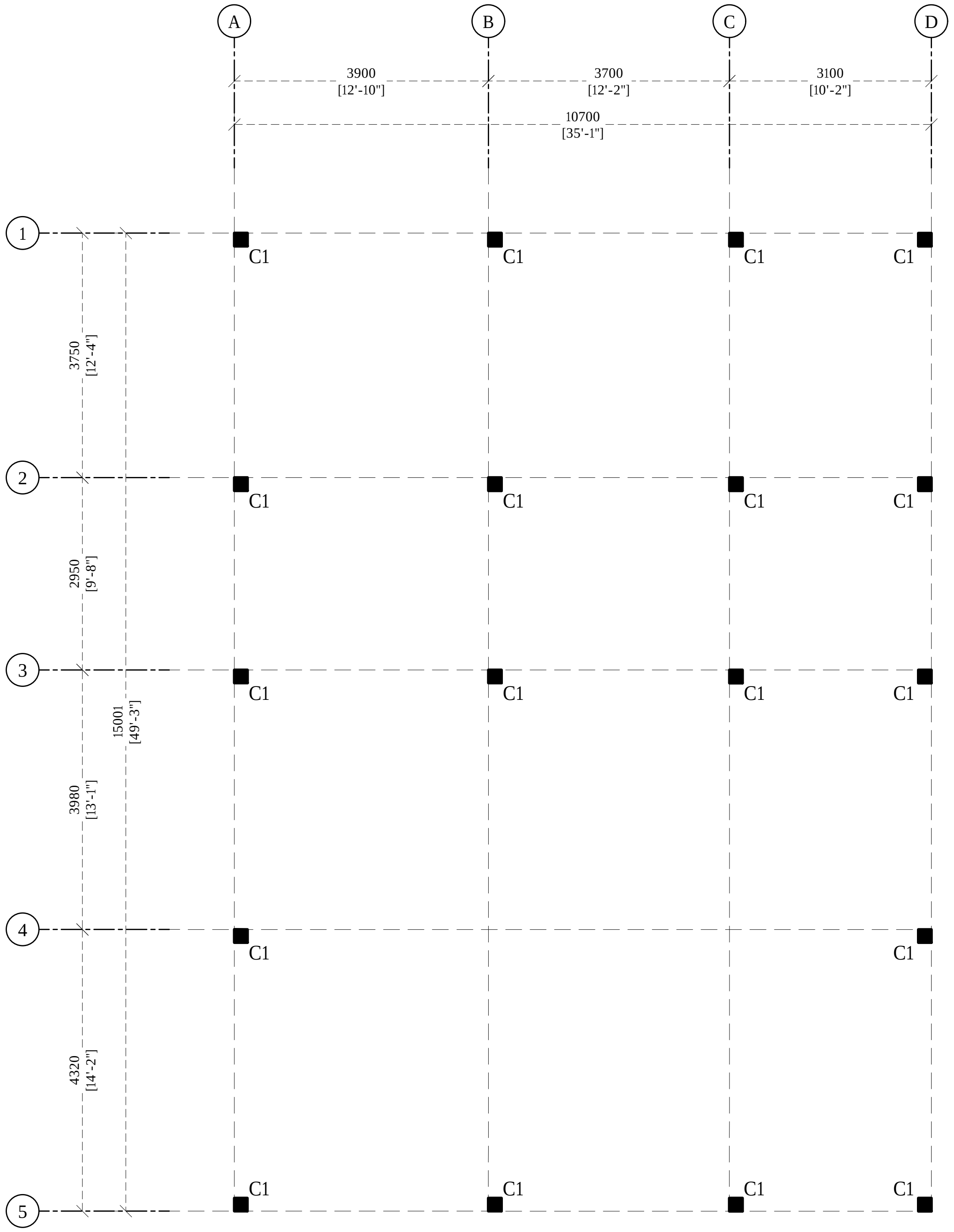
A
B
C
D
3900
[12'-10"]
3700
[12'-2"]
3100
[10'-2"]
10700
[35'-1"]
1
2
3
4
5
3750
[12'-4"]
2950
[9'-8"]
3980
[13'-1"]
4320
[14'-2"]
15001
[49'-3"]
C1

COLUMN LAYOUT PLAN

1:100

Legend

Note:

R01	NOV 2020		A.S.A.	F.I.A.	M.H.
REV. NO.	Date	Revision Description	Drawn	Chkd	Appd.

Title:

Consultancy Services for
Survey, Design and EIA works of
Water Supply and Sewerage
Facilities
in 6 Islands, Maldives – Package 6

Sub Title:

Water Supply System in L.Kunahandhoo

Client:

Ministry of National Planning, Housing and
Infrastructure, Republic of Maldives

EPOCH ASSOCIATES
T: +960 333 3528
E: info@epoch.associates
W: wwww.epoch.associates
A: G. Rosary West,
Husnuheenaa Magu, Male', Maldives

FEEDBACK INFRA
Making Infrastructure Happen

Drawn: A.S.A.
Checked: F.I.A.
Designed: A.S.A.
Approved: M.H.
Date: Nov 2020
SCALE (A3): 1:100
Project No: EP-WS/2019/06
Rev: R-01
Page: S.1 (1)

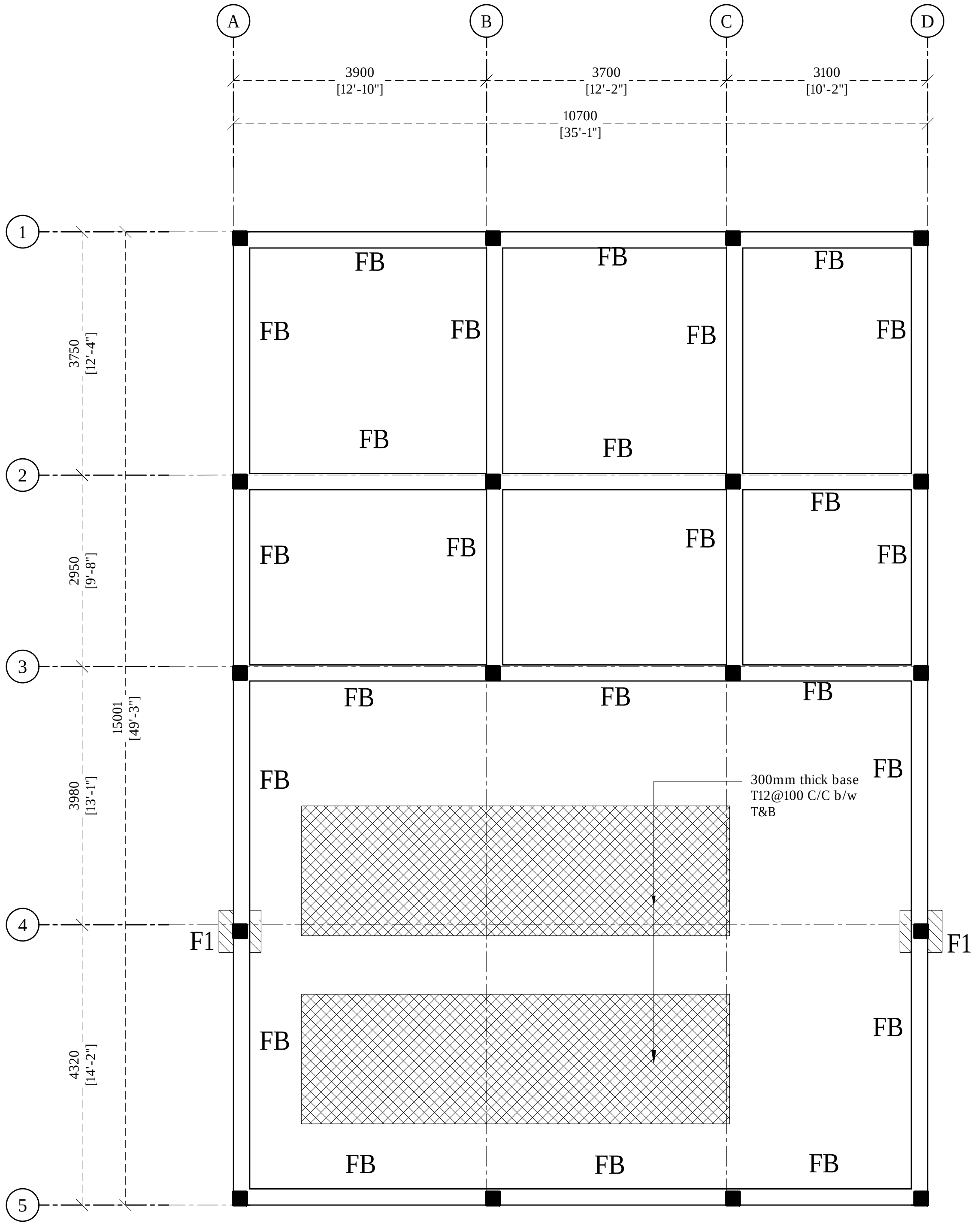
A
B
C
D
3900
[12'-10"]
3700
[12'-2"]
3100
[10'-2"]
10700
[35'-1"]
1
2
3
4
5
3750
[12'-4"]
2950
[9'-8"]
3980
[13'-1"]
4320
[14'-2"]
15001
[49'-3"]
FB
FB
FB
FB
FB
FB
FB
FB
FB
FB
FB
FB
FB
FB
FB
FB
FB
FB
FB
FB
FB
FB
FB
FB
F1
F1
300mm thick base
T12@100 C/C b/w
T&B

FOUNDATION PLAN

1:100

Legend

Note:
- Foundation Footing Depth : 850mm
- Foundation Beam Depth : 600mm

R01	NOV 2020		A.S.A.	F.I.A.	M.H.
REV. NO.	Date	Revision Description	Drawn	Chkd	Appd.

Title:
Consultancy Services for
Survey, Design and EIA works of
Water Supply and Sewerage
Facilities
in 6 Islands, Maldives – Package 6
Sub Title:
Water Supply System in L.Kunahandhoo

Client:
Ministry of National Planning, Housing and
Infrastructure, Republic of Maldives

EPOCH ASSOCIATES
T: +960 333 3528
E: info@epoch.associates
W: wwww.epoch.associates
A: G. Rosary West,
Husnuheenaa Magu, Male', Maldives

FEEDBACK INFRA
Making Infrastructure Happen

Drawn: A.S.A.
Checked: F.I.A.
Designed: A.S.A.
Approved: M.H.
Date: Nov 2020
SCALE (A3): 1:100
Project No: EP-WS/2019/06
Rev: R-01
Page: S.2 (1)

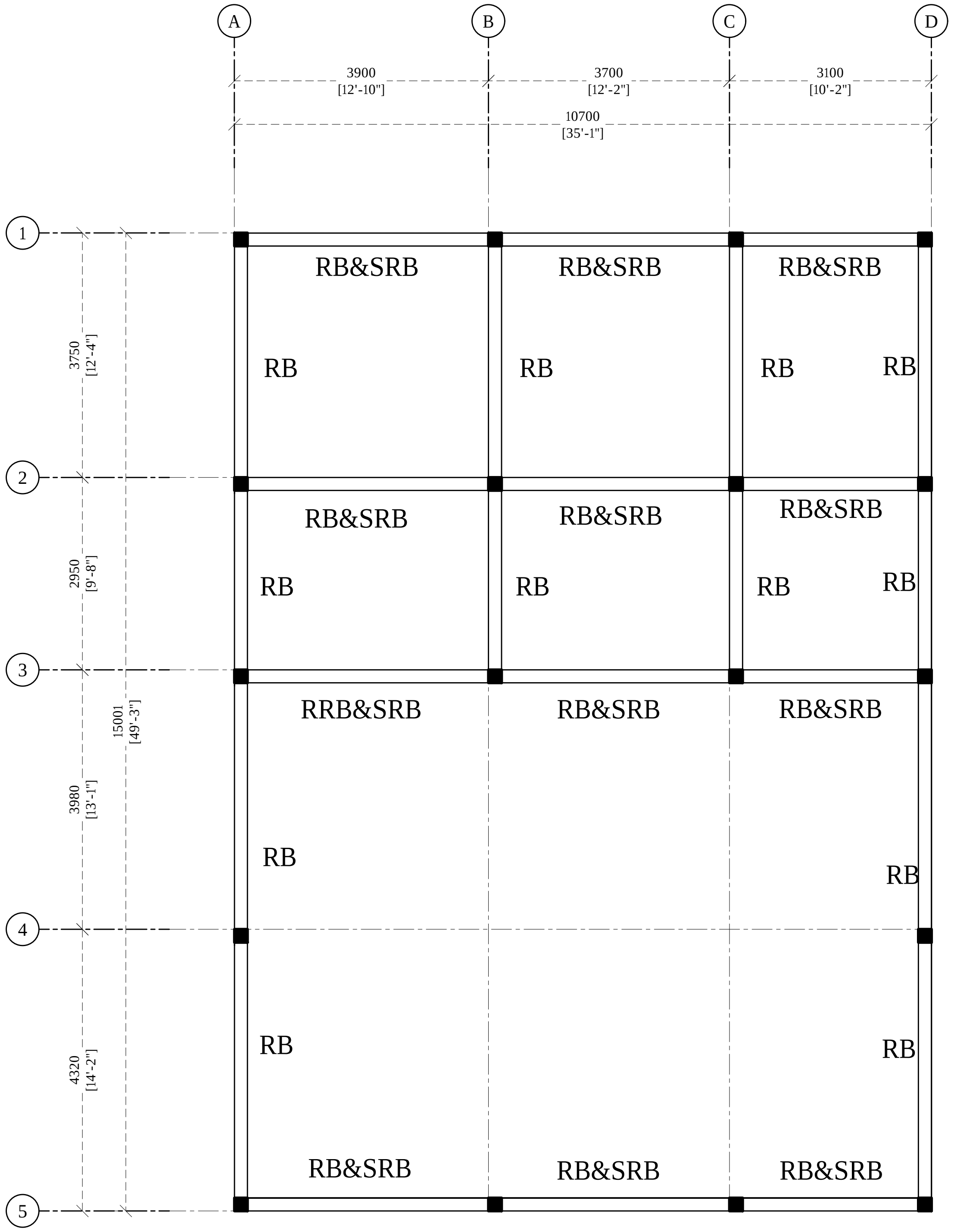
A
B
C
D
3900
[12'-10"]
3700
[12'-2"]
3100
[10'-2"]
10700
[35'-1"]
1
2
3
4
5
3750
[12'-4"]
2950
[9'-8"]
3980
[13'-1"]
4320
[14'-2"]
15001
[49'-3"]
RB&SRB
RB&SRB
RB&SRB
RB
RB
RB
RB
RB&SRB
RB&SRB
RB&SRB
RB
RB
RB
RB
RRB&SRB
RB&SRB
RB&SRB
RB
RB
RB
RB
RB&SRB
RB&SRB
RB&SRB

Legend

Note:

R01	NOV 2020		A.S.A.	F.I.A.	M.H.
REV. NO.	Date	Revision Description	Drawn	Chkd	Appd.

Title:
Consultancy Services for
Survey, Design and EIA works of
Water Supply and Sewerage
Facilities
in 6 Islands, Maldives – Package 6
Sub Title:
Water Supply System in L.Kunahandhoo

Client:
Ministry of National Planning, Housing and
Infrastructure, Republic of Maldives

EPOCH ASSOCIATES
T: +960 333 3528
E: info@epoch.associates
W: wwww.epoch.associates
A: G. Rosary West,
Husnuheenaa Magu, Male', Maldives

FEEDBACK INFRA
Making Infrastructure Happen

Drawn: A.S.A.
Checked: F.I.A.
Designed: A.S.A.
Approved: M.H.
Date: Nov 2020
SCALE (A3): 1:100
Project No: EP-WS/2019/06
Rev: R-01
Page: S.3 (1)

ROOF BEAM PLAN

1:100

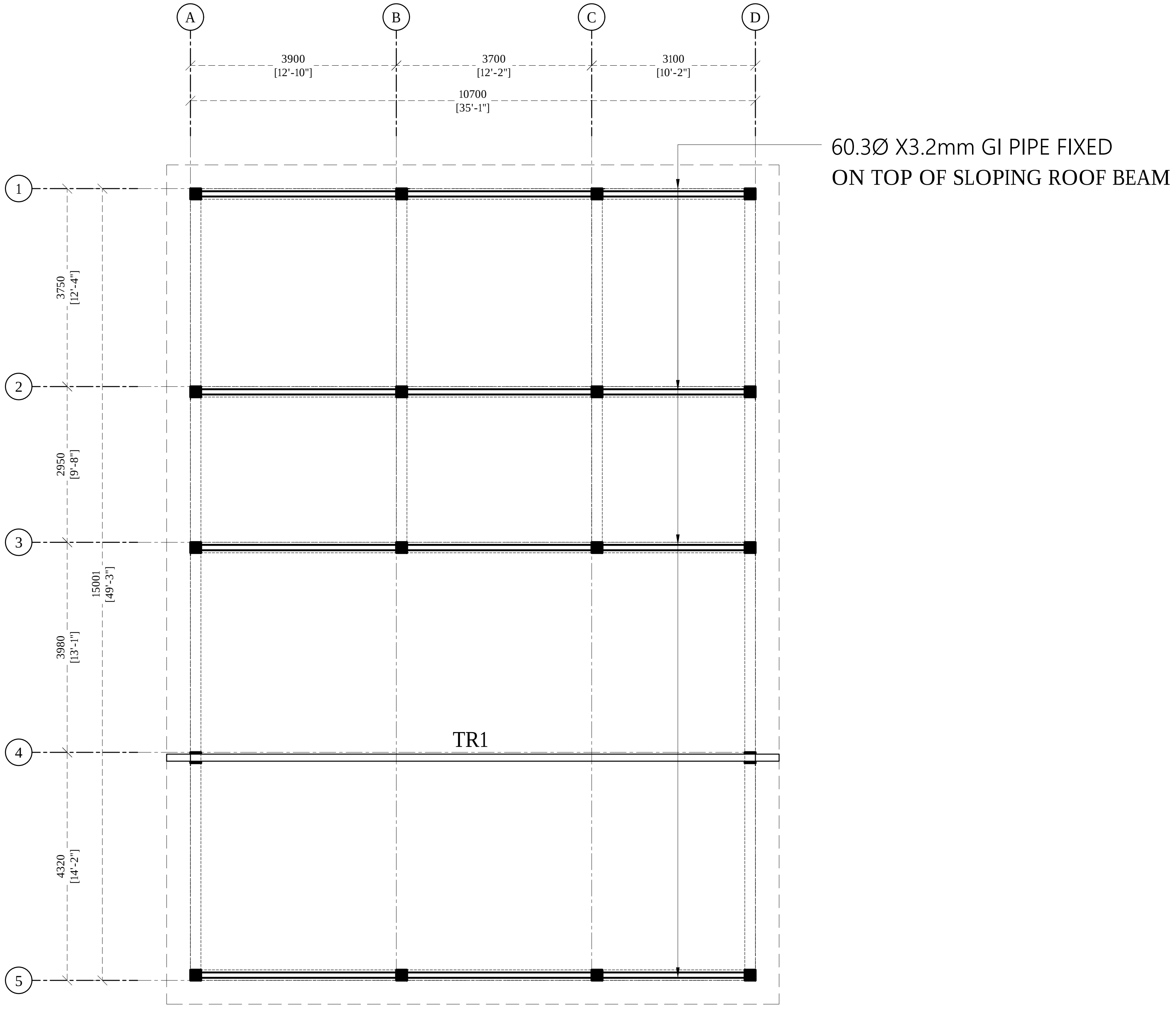
A
B
C
D
3900
[12'-10"]
3700
[12'-2"]
3100
[10'-2"]
10700
[35'-1"]
60.3Ø X3.2mm GI PIPE FIXED
ON TOP OF SLOPING ROOF BEAM
1
2
3
4
5
3750
[12'-4"]
2950
[9'-8"]
3980
[13'-1"]
4320
[14'-2"]
15001
[49'-3"]
TR1

ROOF TRUSS PLAN

1:100

Legend

Note:

REV. NO.	Date	Revision Description	Drawn	Chkd	Appd.
R01	NOV 2020		A.S.A.	F.I.A.	M.H.

Title:
Consultancy Services for Survey, Design and EIA works of Water Supply and Sewerage Facilities
in 6 Islands, Maldives – Package 6
Sub Title:
Water Supply System in L.Kunahandhoo

Client:
Ministry of National Planning, Housing and Infrastructure, Republic of Maldives

EPOCH ASSOCIATES
T: +960 333 3528
E: info@epoch.associates
W: wwww.epoch.associates
A: G. Rosary West,
Husnuheenaa Magu, Male', Maldives

FEEDBACK INFRA
Making Infrastructure Happen

Drawn:	A.S.A.	Checked:	F.I.A.
Designed:	A.S.A.	Approved:	M.H.
Date:	Nov 2020	SCALE (A3):	1:100

Project No: EP-WS/2019/06

Rev: R-01

Page: S.3 (2)

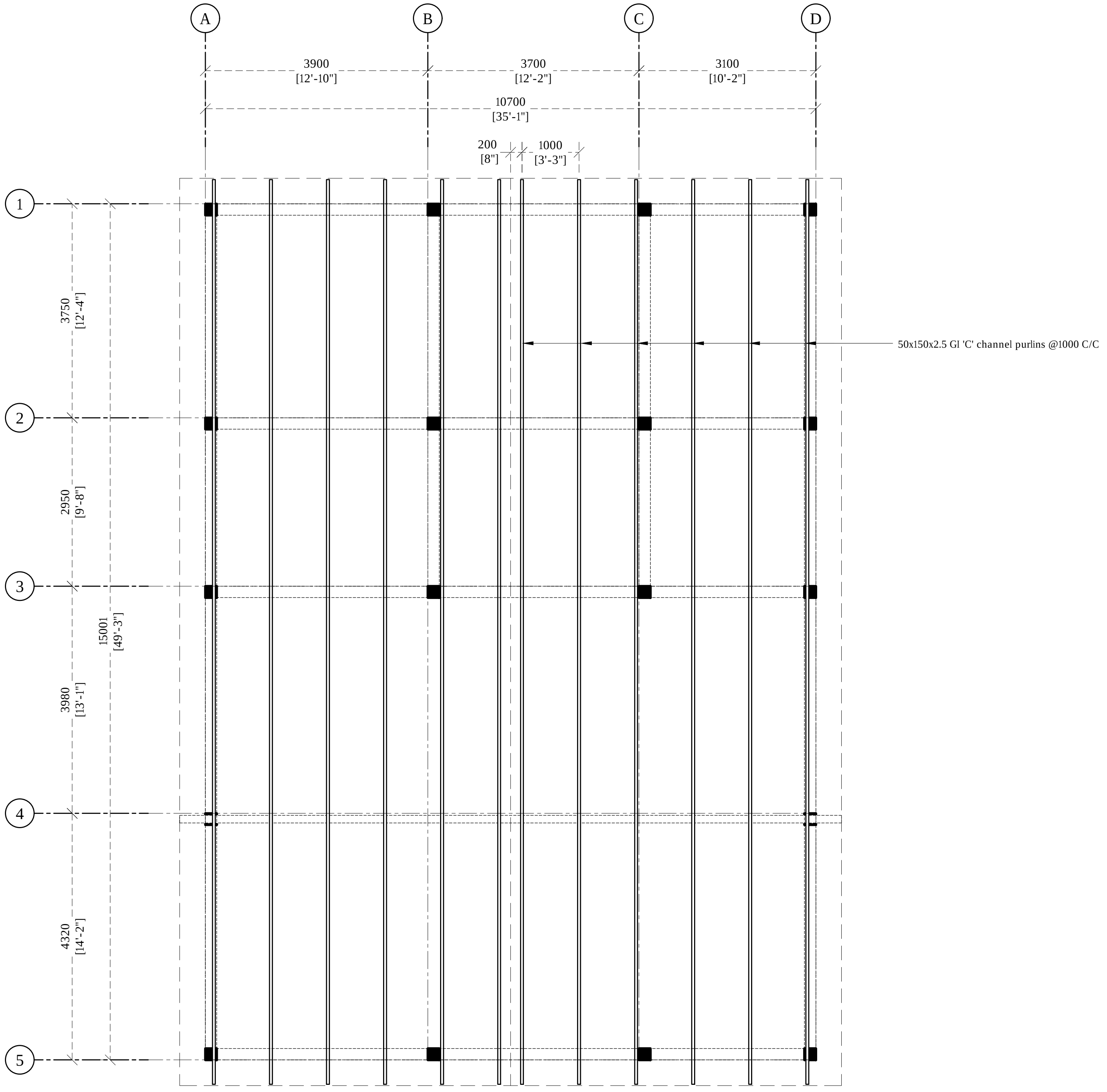
A
B
C
D
3900
[12'-10"]
3700
[12'-2"]
3100
[10'-2"]
10700
[35'-1"]
200
[8"]
1000
[3'-3"]
1
2
3
4
5
3750
[12'-4"]
2950
[9'-8"]
3980
[13'-1"]
4320
[14'-2"]
15001
[49'-3"]
50x150x2.5 GI 'C' channel purlins @1000 C/C

ROOF FRAMING PLAN

1:100

Legend

Note:

R01	NOV 2020		A.S.A.	F.I.A.	M.H.
REV. NO.	Date	Revision Description	Drawn	Chkd	Appd.

Title:

Consultancy Services for
Survey, Design and EIA works of
Water Supply and Sewerage
Facilities
in 6 Islands, Maldives – Package 6

Sub Title:

Water Supply System in L.Kunahandhoo

Client:

Ministry of National Planning, Housing and Infrastructure, Republic of Maldives

T: +960 333 3528
E: info@epoch.associates
W: wwww.epoch.associates
A: G. Rosary West,
Husnuheenaa Magu, Male', Maldives

Drawn: A.S.A.
Checked: F.I.A.
Designed: A.S.A.
Approved: M.H.
Date: Nov 2020
SCALE (A3): 1:100
Project No: EP-WS/2019/06
Rev: R-01
Page: S.3 (3)

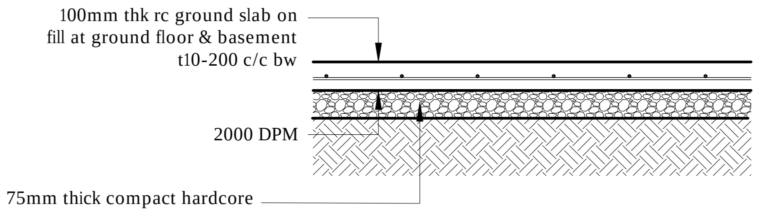
100mm thk rc ground slab on
fill at ground floor & basement
t10-200 c/c bw
2000 DPM
75mm thick compact hardcore

Note:

- All cover blocks shall be casted using grade C25/30 concrete with 5-10mm aggregates
- For slab, rebar spacer chairs spacing shall be minimum 1m spacing or 1 no. per 1 sqm

TYPICAL GROUND SLAB DETAIL

1:20

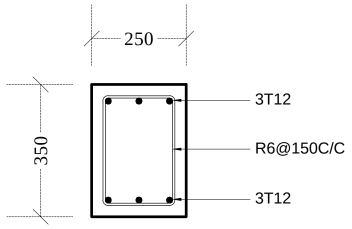
250
350
3T12
R6@150C/C
3T12

FOUNDATION BEAM (FB)

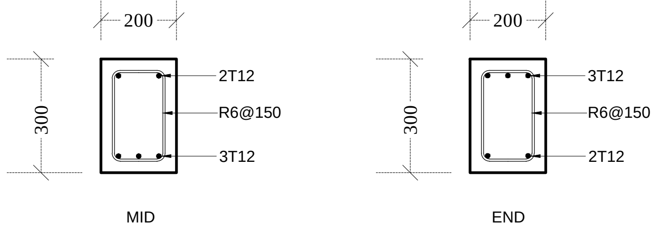
200
300
2T12
R6@150
3T12
MID
200
300
3T12
R6@150
2T12
END

ROOF BEAM (RB)

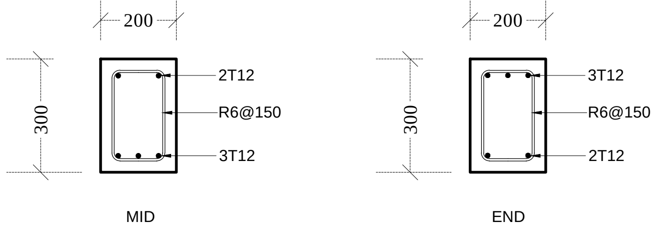
200
300
2T12
R6@150
3T12
MID
200
300
3T12
R6@150
2T12
END

SLOPING ROOF BEAM (SRB)

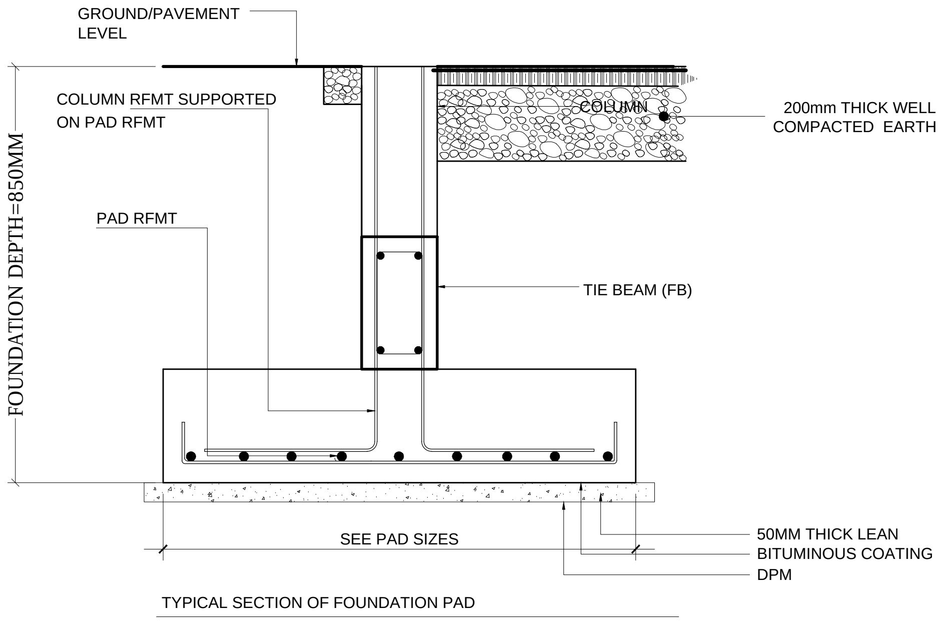
GROUND/PAVEMENT
LEVEL
COLUMN RFMT SUPPORTED
ON PAD RFMT
COLUMN
200mm THICK WELL
COMPACTED EARTH
FOUNDATION DEPTH=850MM
PAD RFMT
TIE BEAM (FB)
SEE PAD SIZES
50MM THICK LEAN
BITUMINOUS COATING
DPM
TYPICAL SECTION OF FOUNDATION PAD

TYPICAL COLUMN SECTION

F1 - 650x650x250 - T10@150C/C B/W (B)

FOUNDATION PAD DETAILS

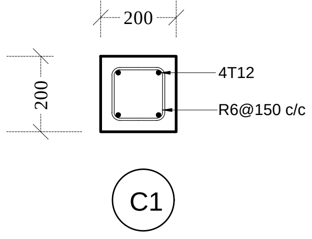
200
200
4T12
R6@150 c/c
C1

COLUMN DETAIL

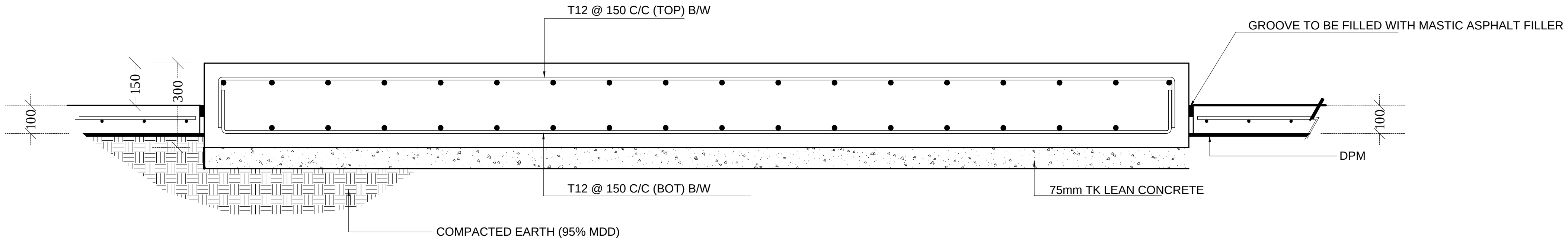
T12 @ 150 C/C (TOP) B/W
GROOVE TO BE FILLED WITH MASTIC ASPHALT FILLER
150
300
100
100
DPM
T12 @ 150 C/C (BOT) B/W
75mm TK LEAN CONCRETE
COMPACTED EARTH (95% MDD)

RO PLANT BASE DETAIL

STRUCTURAL DETAILS

1:20

Legend

Note:

- Cover for foundation pads and foundation beams shall be 50mm
- Cover for floor slabs shall be 30mm
- Cover for columns shall be 40mm
- Concrete shall be of grade C25
- All concrete cold joints shall be casted with bonding agent
- laps = 45 dia (dia = bar dimeter)
- mid bars = 0.85 x span
- sup bars = 1/3 x span
- concrete mix = 1:2:3 (C:S:A)
- lean concrete mix = 1:2:5

R01	NOV 2020		A.S.A.	F.I.A.	M.H.
REV. NO.	Date	Revision Description	Drawn	Chkd	Appd.

Title:
Consultancy Services for
Survey, Design and EIA works of
Water Supply and Sewerage
Facilities
in 6 Islands, Maldives – Package 6
Sub Title:
Water Supply System in L.Kunahandhoo

Client:
Ministry of National Planning, Housing and
Infrastructure, Republic of Maldives

EPOCH ASSOCIATES
T: +960 333 3528
E: info@epoch.associates
W: wwww.epoch.associates
A: G. Rosary West,
Husnuheenaa Magu, Male', Maldives

FEEDBACK INFRA
Making Infrastructure Happen

Drawn:	A.S.A.	Checked:	F.I.A.
Designed:	A.S.A.	Approved:	M.H.
Date:	Nov 2020	SCALE (A3):	1:100

Project No: EP-WS/2019/06

Rev: R-01

Page: S.D (1)

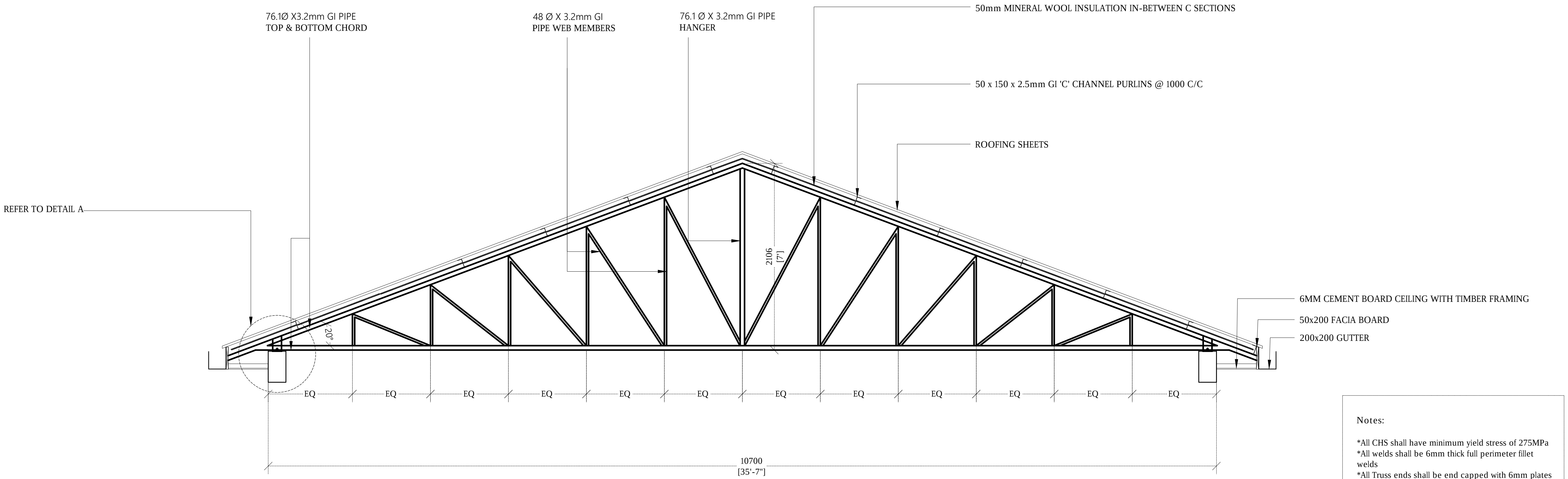
76.1Ø X3.2mm GI PIPE
TOP & BOTTOM CHORD
48 Ø X 3.2mm GI
PIPE WEB MEMBERS
76.1 Ø X 3.2mm GI PIPE
HANGER
50mm MINERAL WOOL INSULATION IN-BETWEEN C SECTIONS
50 x 150 x 2.5mm GI 'C' CHANNEL PURLINS @ 1000 C/C
ROOFING SHEETS
REFER TO DETAIL A
2106
[7']
20°
6MM CEMENT BOARD CEILING WITH TIMBER FRAMING
50x200 FACIA BOARD
200x200 GUTTER
EQ
EQ
EQ
EQ
EQ
EQ
EQ
EQ
EQ
EQ
EQ
EQ
10700
[35'-7"]

TRUSS DETAIL TR1 @ GRID 2

1:50

Notes:

*All CHS shall have minimum yield stress of 275MPa
*All welds shall be 6mm thick full perimeter fillet welds
*All Truss ends shall be end capped with 6mm plates
*All truss members shall be protected with anti corrosive coatings

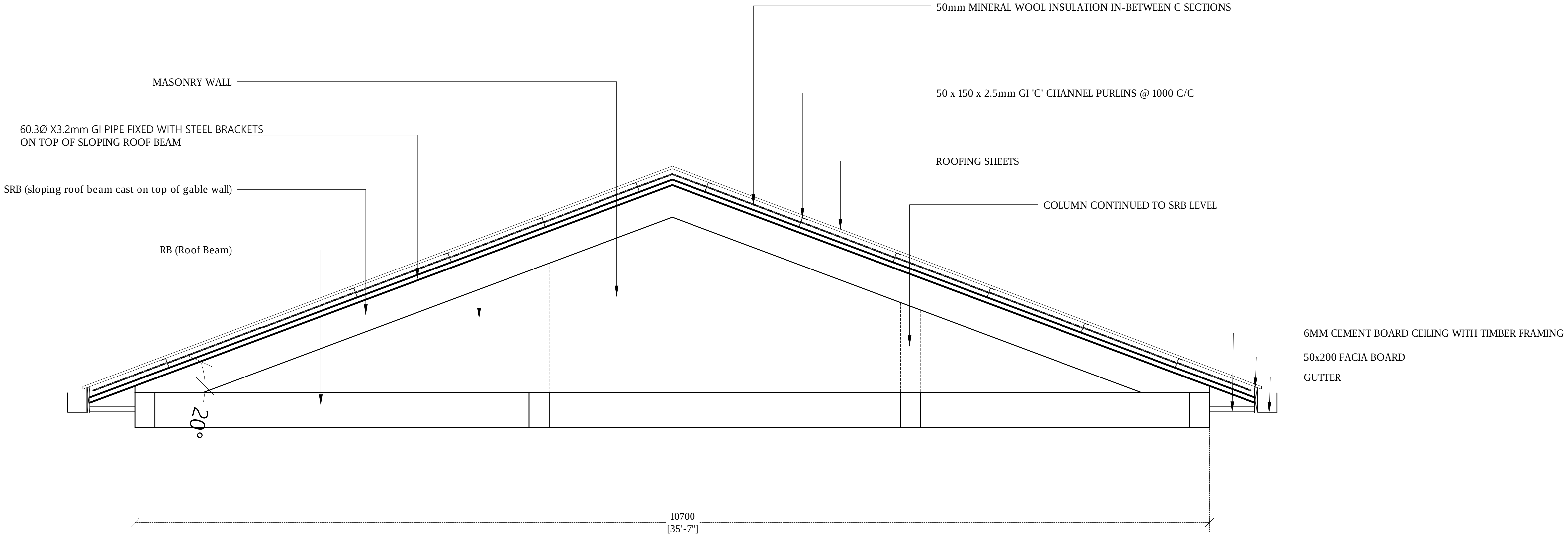
50mm MINERAL WOOL INSULATION IN-BETWEEN C SECTIONS
MASONRY WALL
50 x 150 x 2.5mm GI 'C' CHANNEL PURLINS @ 1000 C/C
60.3Ø X3.2mm GI PIPE FIXED WITH STEEL BRACKETS
ON TOP OF SLOPING ROOF BEAM
ROOFING SHEETS
SRB (sloping roof beam cast on top of gable wall)
COLUMN CONTINUED TO SRB LEVEL
RB (Roof Beam)
6MM CEMENT BOARD CEILING WITH TIMBER FRAMING
50x200 FACIA BOARD
GUTTER
20°
10700
[35'-7"]

DETAIL OF 63Øx3.2MM PIPE FIXED ON GRID 1,3,4 & 5

1:50

Legend

Note:

R01	NOV 2020		A.S.A.	F.I.A.	M.H.
REV. NO.	Date	Revision Description	Drawn	Chkd	Appd.

Title:
Consultancy Services for
Survey, Design and EIA works of
Water Supply and Sewerage
Facilities
in 6 Islands, Maldives – Package 6
Sub Title:
Water Supply System in L.Kunahandhoo

Client:
Ministry of National Planning, Housing and
Infrastructure, Republic of Maldives

EPOCH ASSOCIATES
T: +960 333 3528
E: info@epoch.associates
W: wwww.epoch.associates
A: G. Rosary West,
Husnuheenaa Magu, Male', Maldives

FEEDBACK INFRA
Making Infrastructure Happen

Drawn: A.S.A.
Checked: F.I.A.
Designed: A.S.A.
Approved: M.H.
Date: Nov 2020
SCALE (A3): 1:100
Project No: EP-WS/2019/06
Rev: R-01
Page: S.D (2)

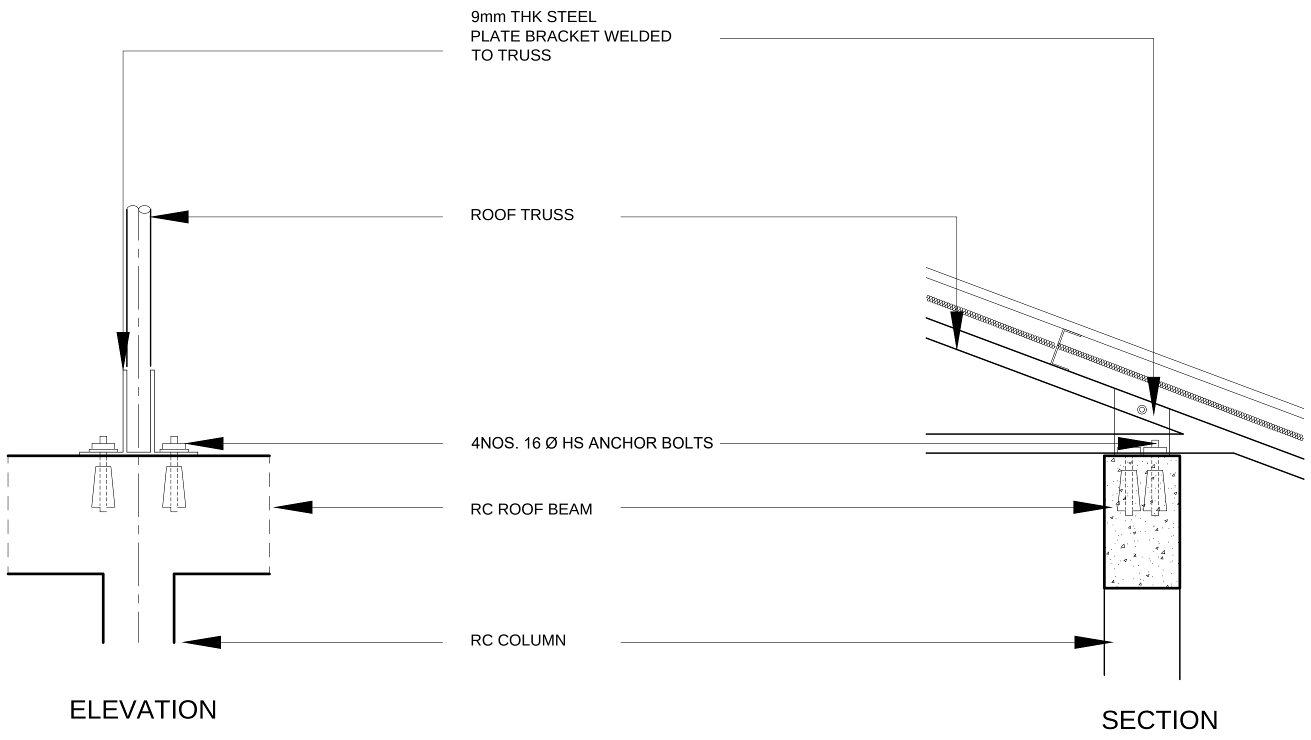
9mm THK STEEL
PLATE BRACKET WELDED
TO TRUSS
ROOF TRUSS
4NOS. 16 Ø HS ANCHOR BOLTS
RC ROOF BEAM
RC COLUMN
ELEVATION
SECTION

DETAIL A

1:20

Legend

Note:

R01	NOV 2020		A.S.A.	F.I.A.	M.H.
REV. NO.	Date	Revision Description	Drawn	Chkd	Appd.

Title:
Consultancy Services for
Survey, Design and EIA works of
Water Supply and Sewerage
Facilities
in 6 Islands, Maldives – Package 6
Sub Title:
Water Supply System in L.Kunahandhoo

Client:
Ministry of National Planning, Housing and
Infrastructure, Republic of Maldives

T: +960 333 3528
E: info@epoch.associates
W: wwww.epoch.associates
A: G. Rosary West,
Husnuheenaa Magu, Male', Maldives

FEEDBACK INFRA
Making Infrastructure Happen

Drawn: A.S.A.
Checked: F.I.A.
Designed: A.S.A.
Approved: M.H.
Date: Nov 2020
SCALE (A3): 1:100
Project No: EP-WS/2019/06
Rev: R-01
Page: S.D (3)

ARCHITECTURAL AND STRUCTURAL DRAWINGS OF

PROPOSED SINGLE STOREY BUILDING AT

RO PLANT VEHICLE SHED, L.KUNAHANDHOO

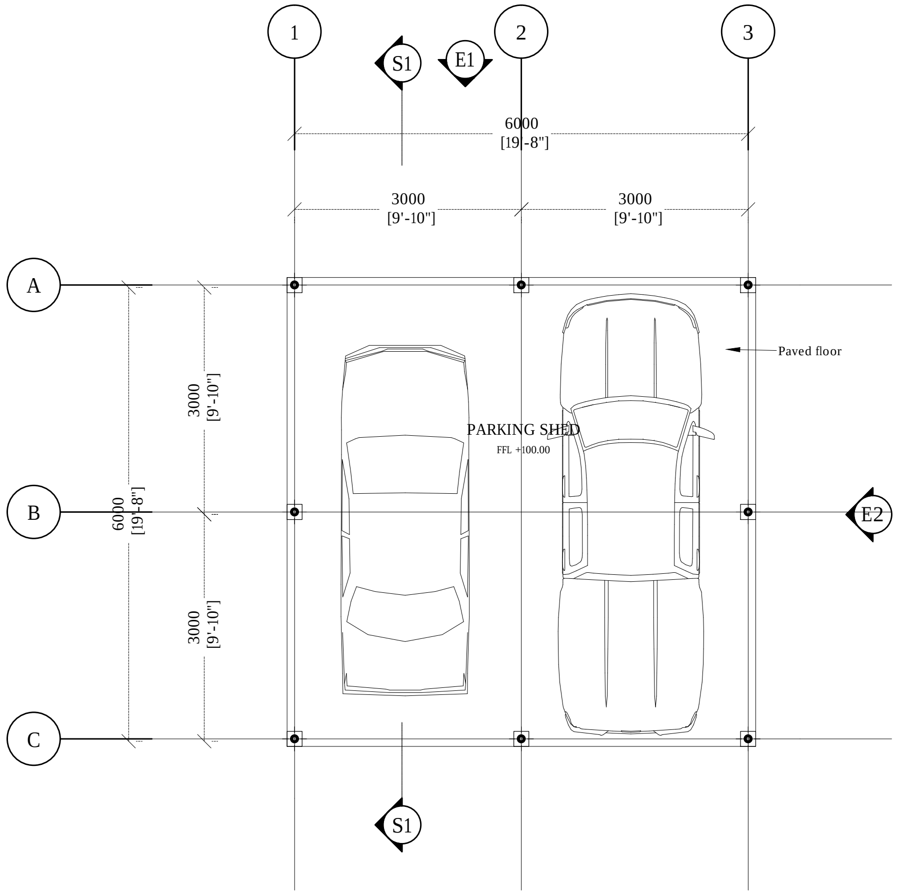
1
2
3
S1
E1
6000
[19'-8"]
3000
[9'-10"]
3000
[9'-10"]
A
B
C
3000
[9'-10"]
6000
[19'-8"]
3000
[9'-10"]
Paved floor
PARKING SHED
FFL +100.00
E2
S1

GROUND FLOOR PLAN

1:100

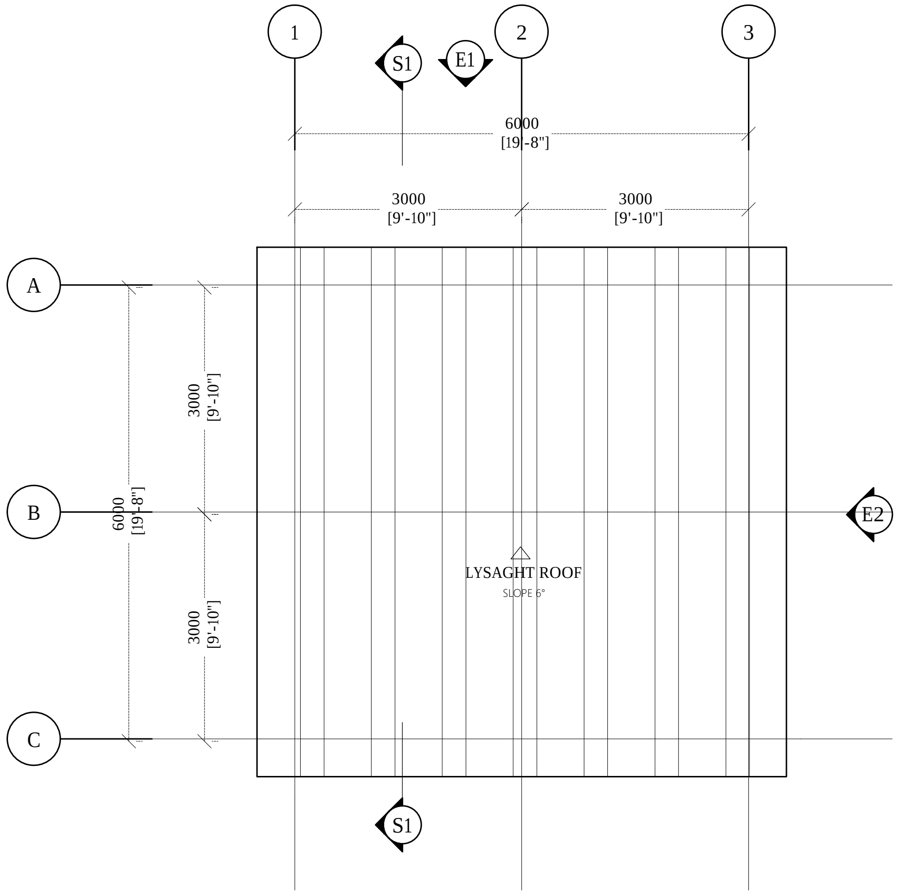
1
2
3
S1
E1
6000
[19'-8"]
3000
[9'-10"]
3000
[9'-10"]
A
B
C
3000
[9'-10"]
6000
[19'-8"]
3000
[9'-10"]
LYSAGHT ROOF
SLOPE 6°
E2
S1

ROOF PLAN

1:100

Legend

Note:

R01	NOV 2020		A.S.A.	F.I.A.	M.H.
REV. NO.	Date	Revision Description	Drawn	Chkd	Appd.

Title:
Consultancy Services for
Survey, Design and EIA works of
Water Supply and Sewerage
Facilities
in 6 Islands, Maldives – Package 6
Sub Title:
Water Supply System in L.Kunahandhoo

Client:
Ministry of National Planning, Housing and
Infrastructure, Republic of Maldives

EPOCH ASSOCIATES
T: +960 333 3528
E: info@epoch.associates
W: wwww.epoch.associates
A: G. Rosary West,
Husnuheenaa Magu, Male', Maldives

FEEDBACK INFRA
Making Infrastructure Happen

Drawn: A.S.A.
Checked: F.I.A.
Designed: A.S.A.
Approved: M.H.
Date: Nov 2020
SCALE (A3): 1:100
Project No: EP-WS/2019/06
Rev: R-01
Page: A.6 (1)

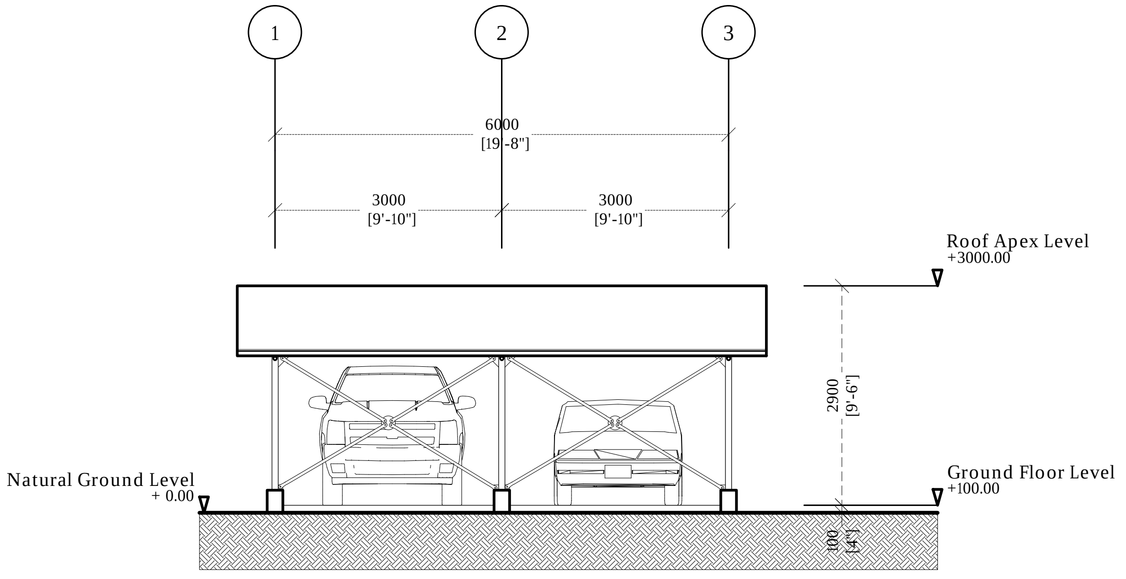
1
2
3
6000
[19'-8"]
3000
[9'-10"]
3000
[9'-10"]
Roof Apex Level
+3000.00
2900
[9'-6"]
Natural Ground Level
+ 0.00
Ground Floor Level
+100.00
100
[4"]

ELEVATION E1

1:100

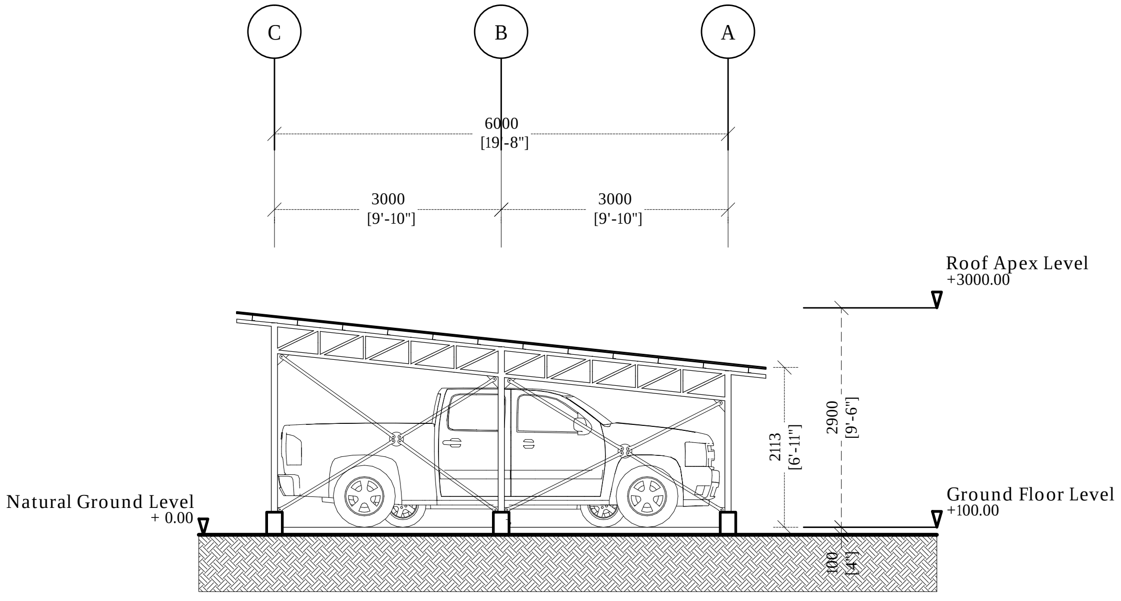
C
B
A
6000
[19'-8"]
3000
[9'-10"]
3000
[9'-10"]
Roof Apex Level
+3000.00
2113
[6'-11"]
2900
[9'-6"]
Natural Ground Level
+ 0.00
Ground Floor Level
+100.00
100
[4"]

ELEVATION E2

1:100

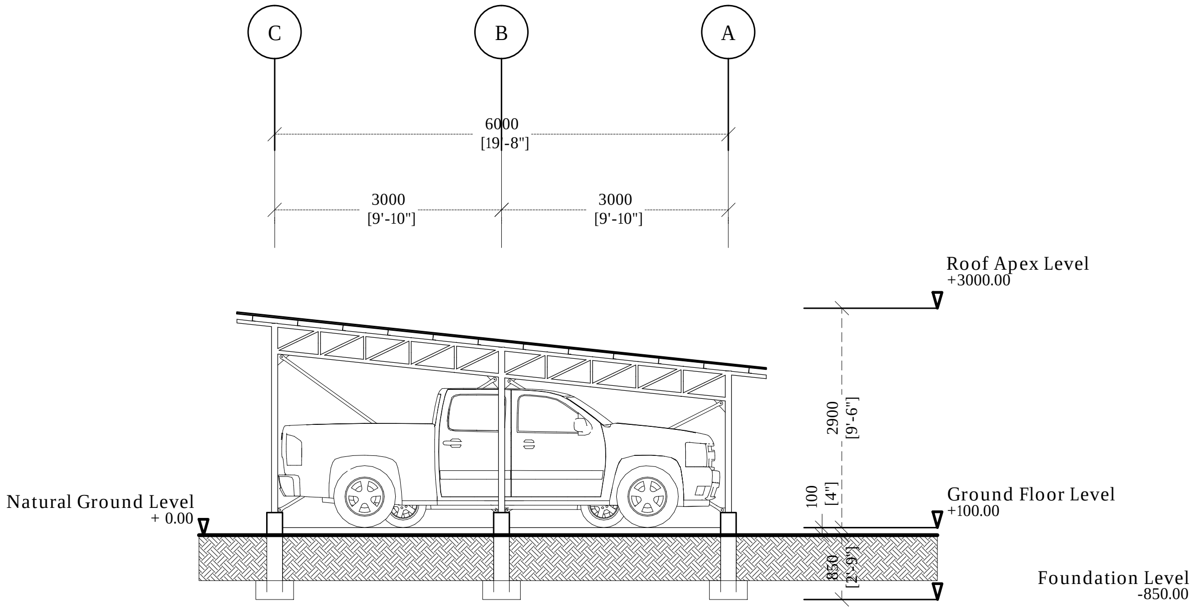
C
B
A
6000
[19'-8"]
3000
[9'-10"]
3000
[9'-10"]
Roof Apex Level
+3000.00
2900
[9'-6"]
Natural Ground Level
+ 0.00
Ground Floor Level
+100.00
100
[4"]
850
[2'-9"]
Foundation Level
-850.00

SECTION S1

1:100

Legend

Note:

R01	NOV 2020		A.S.A.	F.I.A.	M.H.
REV. NO.	Date	Revision Description	Drawn	Chkd	Appd.

Title:

Consultancy Services for
Survey, Design and EIA works of
Water Supply and Sewerage
Facilities
in 6 Islands, Maldives – Package 6

Sub Title:

Water Supply System in L.Kunahandhoo

Client:

Ministry of National Planning, Housing and
Infrastructure, Republic of Maldives

EPOCH ASSOCIATES
T: +960 333 3528
E: info@epoch.associates
W: wwww.epoch.associates
A: G. Rosary West,
Husnuheenaa Magu, Male', Maldives

FEEDBACK INFRA
Making Infrastructure Happen

Drawn: A.S.A.
Checked: F.I.A.
Designed: A.S.A.
Approved: M.H.
Date: Nov 2020
SCALE (A3): 1:100
Project No: EP-WS/2019/06
Rev: R-01
Page: A.6 (2)

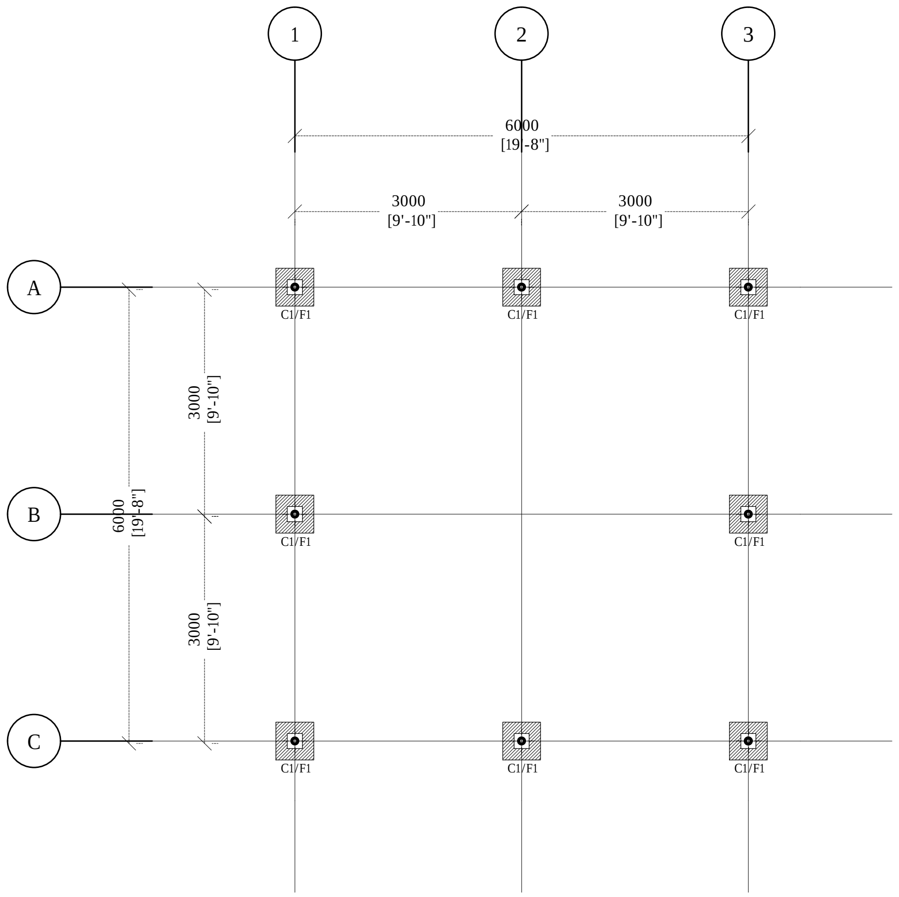
1
2
3
6000
[19'-8"]
3000
[9'-10"]
3000
[9'-10"]
A
B
C
3000
[9'-10"]
6000
[19'-8"]
3000
[9'-10"]
C1/F1
C1/F1
C1/F1
C1/F1
C1/F1
C1/F1
C1/F1
C1/F1

FOUNDATION PLAN

1:100

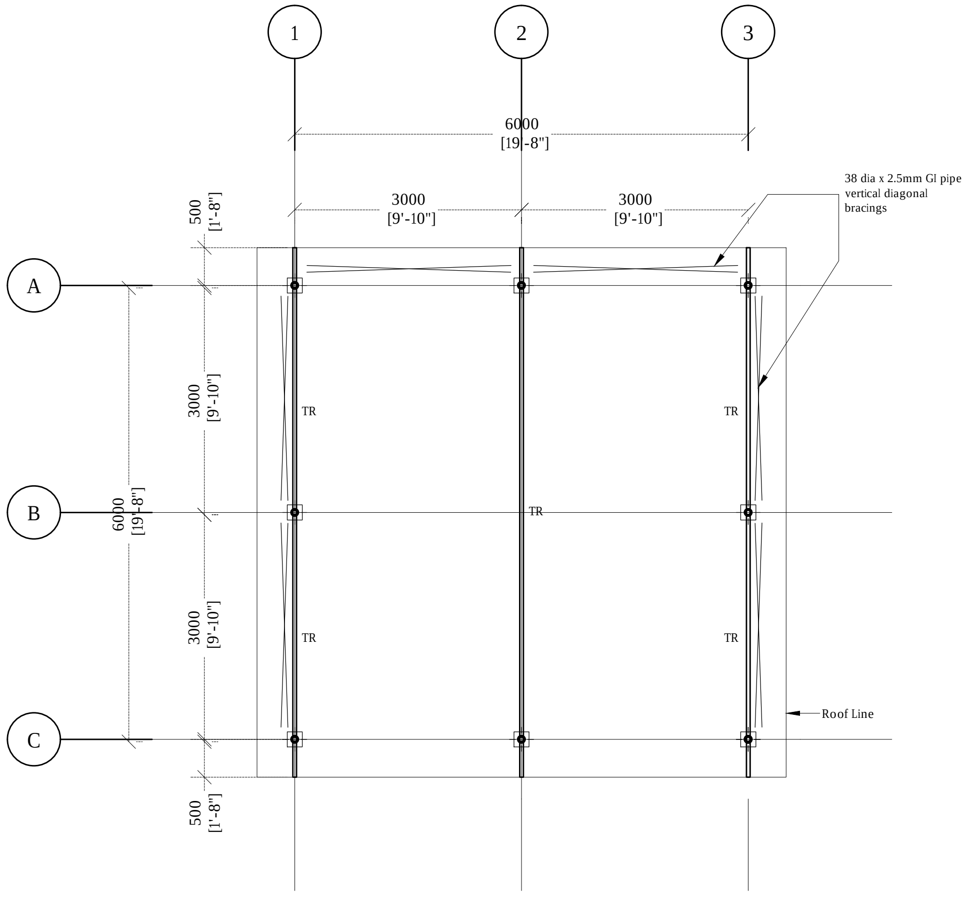
1
2
3
6000
[19'-8"]
3000
[9'-10"]
3000
[9'-10"]
38 dia x 2.5mm GI pipe vertical diagonal bracings
500
[1'-8"]
A
B
C
3000
[9'-10"]
6000
[19'-8"]
3000
[9'-10"]
500
[1'-8"]
TR
TR
TR
TR
TR
Roof Line

ROOF TRUSS PLAN

1:100

Legend

Note:

R01	NOV 2020		A.S.A.	F.I.A.	M.H.
REV. NO.	Date	Revision Description	Drawn	Chkd	Appd.

Title:
Consultancy Services for
Survey, Design and EIA works of
Water Supply and Sewerage
Facilities
in 6 Islands, Maldives – Package 6
Sub Title:
Water Supply System in L.Kunahandhoo

Client:
Ministry of National Planning, Housing and
Infrastructure, Republic of Maldives

T: +960 333 3528
E: info@epoch.associates
W: wwww.epoch.associates
A: G. Rosary West,
Husnuheenaa Magu, Male', Maldives

Drawn: A.S.A.
Checked: F.I.A.
Designed: A.S.A.
Approved: M.H.
Date: Nov 2020
SCALE (A3): 1:100
Project No: EP-WS/2019/06
Rev: R-01
Page: S.4 (1)

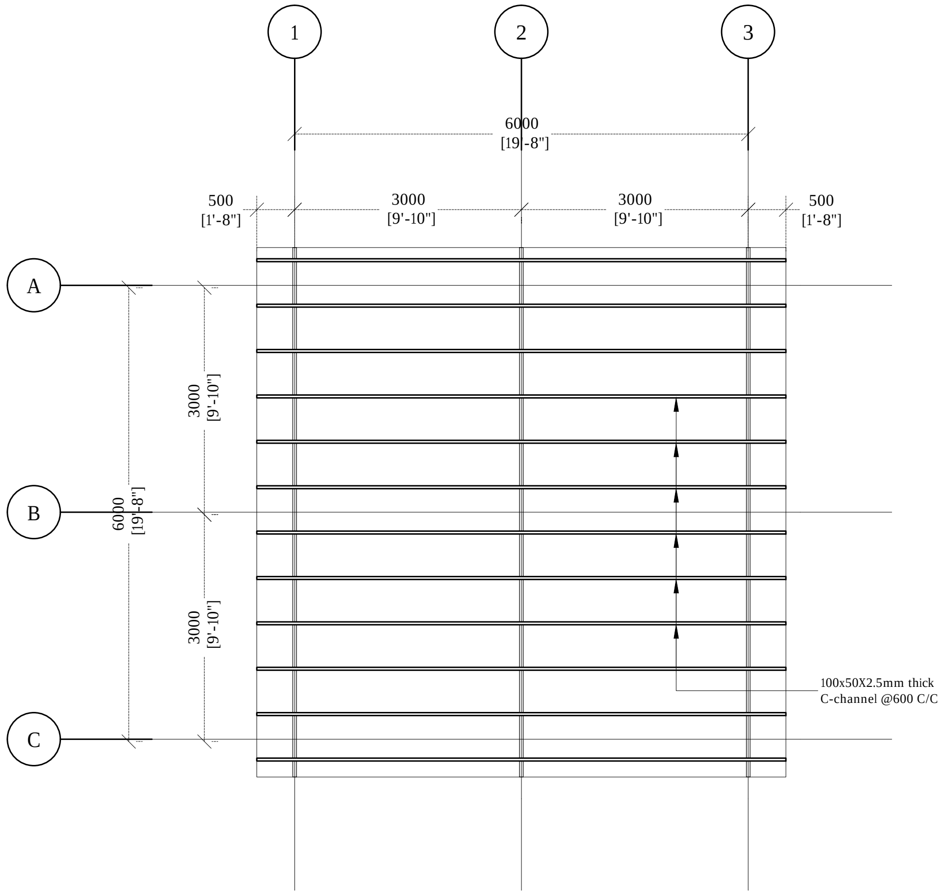
1
2
3
6000
[19'-8"]
500
[1'-8"]
3000
[9'-10"]
3000
[9'-10"]
500
[1'-8"]
A
B
C
6000
[19'-8"]
3000
[9'-10"]
3000
[9'-10"]
100x50X2.5mm thick
C-channel @600 C/C

ROOF FRAMING PLAN

1:100

Legend

Note:

R01	NOV 2020		A.S.A.	F.I.A.	M.H.
REV. NO.	Date	Revision Description	Drawn	Chkd	Appd.

Title:
Consultancy Services for
Survey, Design and EIA works of
Water Supply and Sewerage
Facilities
in 6 Islands, Maldives – Package 6
Sub Title:
Water Supply System in L.Kunahandhoo

Client:
Ministry of National Planning, Housing and
Infrastructure, Republic of Maldives

EPOCH ASSOCIATES
T: +960 333 3528
E: info@epoch.associates
W: wwww.epoch.associates
A: G. Rosary West,
Husnuheenaa Magu, Male', Maldives

FEEDBACK INFRA
Making Infrastructure Happen

Drawn: A.S.A.
Checked: F.I.A.
Designed: A.S.A.
Approved: M.H.
Date: Nov 2020
SCALE (A3): 1:100
Project No: EP-WS/2019/06
Rev: R-01
Page: S.4(2)

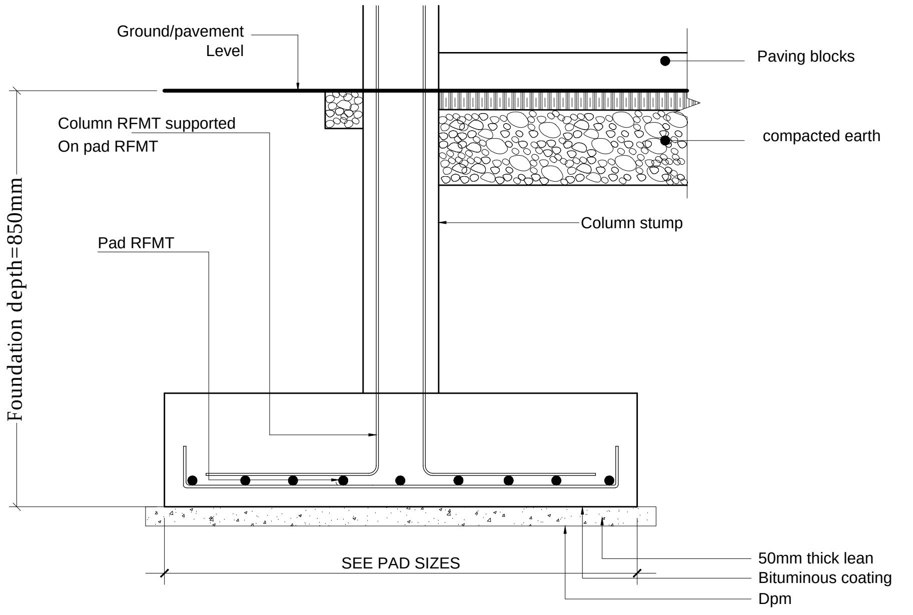
Ground/pavement Level
Paving blocks
compacted earth
Column RFMT supported On pad RFMT
Column stump
Pad RFMT
Foundation depth=850mm
SEE PAD SIZES
50mm thick lean
Bituminous coating
Dpm

F1 - 500x500x250 - T10@150C/C B/W (B)

FOUNDATION PAD DETAILS

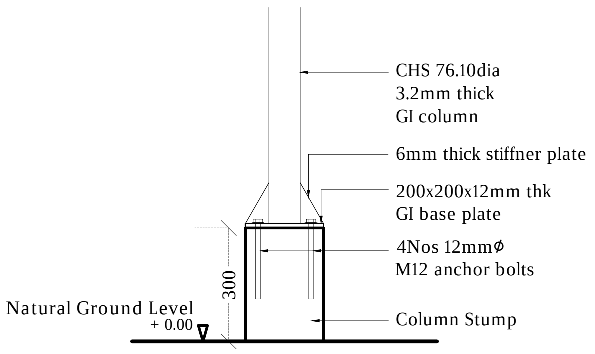
CHS 76.10dia
3.2mm thick
Gl column
6mm thick stiffner plate
200x200x12mm thk
Gl base plate
4Nos 12mmɸ
M12 anchor bolts
Column Stump
Natural Ground Level
+ 0.00
300

VEHICLE SHED TYPICAL FOOTING DETAIL

1:20

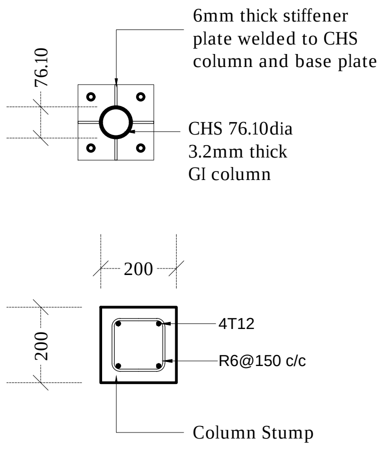
6mm thick stiffener plate welded to CHS column and base plate
76.10
CHS 76.10dia
3.2mm thick
Gl column
200
200
4T12
R6@150 c/c
Column Stump

COLUMN DETAIL

1:20

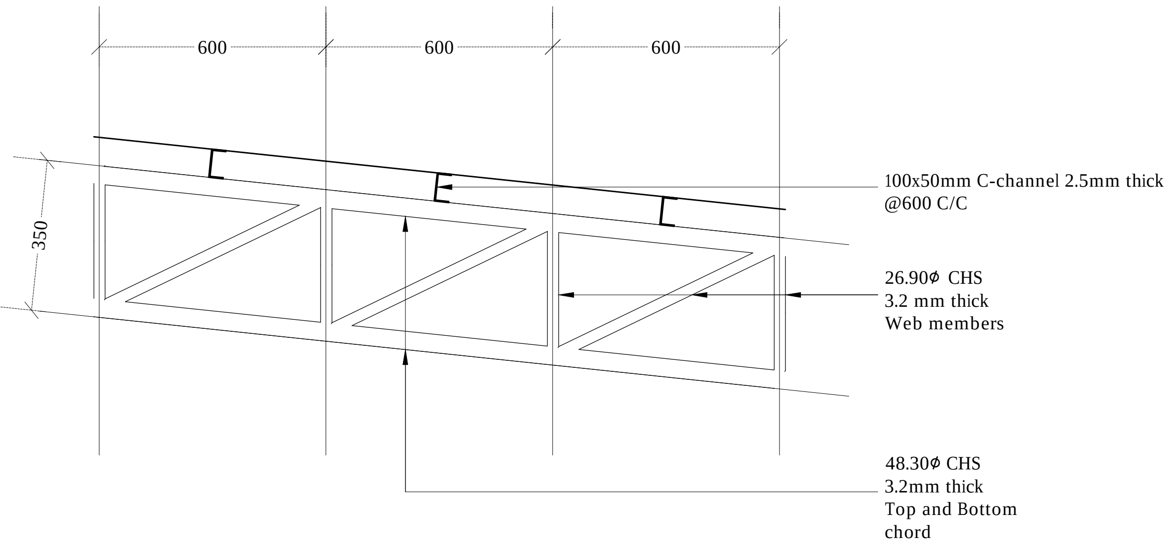
600
600
600
350
100x50mm C-channel 2.5mm thick @600 C/C
26.90ɸ CHS
3.2 mm thick
Web members
48.30ɸ CHS
3.2mm thick
Top and Bottom chord

TRUSS DETAIL

1:20

Legend

Note:

*All CHS shall have minimum yield stress of 275MPa
*All welds shall be 6mm thick full perimeter fillet welds
*All Truss ends shall be end capped with 6mm plates
*All truss members shall be protected with anti corrosive coatings
*38 dia x 2.5mm Gl pipe to be used for all bracings.
*Cover for footings shall be 50mm.
*Cover for columns shall be 40mm.
*Concrete shall be of grade C25.

R01	NOV 2020		A.S.A.	F.I.A.	M.H.
REV. NO.	Date	Revision Description	Drawn	Chkd	Appd.

Title:
Consultancy Services for
Survey, Design and EIA works of
Water Supply and Sewerage
Facilities
in 6 Islands, Maldives – Package 6
Sub Title:
Water Supply System in L.Kunahandhoo

Client:
Ministry of National Planning, Housing and
Infrastructure, Republic of Maldives

T: +960 333 3528
E: info@epoch.associates
W: wwww.epoch.associates
A: G. Rosary West,
Husnuheenaa Magu, Male', Maldives

Drawn: A.S.A.
Checked: F.I.A.
Designed: A.S.A.
Approved: M.H.
Date: Nov 2020
SCALE (A3): 1:50
Project No: EP-WS/2019/06
Rev: R-01
Page: S.D (4)

BUILDING SERVICES DRAWINGS OF

PROPOSED SINGLE STOREY BUILDING AT

RO PLANT ADMIN BUILDING, L. KUNAHANDHOO

For Ministry of National Planning, Housing and Infrastructure

CONTENTS

BUILDING SERVICES DRAWINGS	
GROUND FLOOR POWER AND ACV LAYOUT	PAC-01
GROUND FLOOR FDP LAYOUT	FDP-01
GROUND FLOOR LIGHTING LAYOUT	EL-01
GROUND FLOOR PLUMBING LAYOUT	PL-01
GROUND FLOOR DRAINAGE LAYOUT	DR-01
ROOF DRAINAGE LAYOUT	DR-02
SITE LIGHTING LAYOUT	EL-02
VEHICLE PARKING AREA - PLUMBING LAYOUT	PL-02
VEHICLE PARKING AREA - DRAINAGE LAYOUT	DR-03

Legend

	13A Twin Socket
	13A Twin Socket With USB Ports
	15A Switched Socket @ H.L.
	15A Socket In Polycarbonate Box
	15A Switch @ 1200mm From F.F.L.
	13A Power Socket
	Distribution Board
HL.	High Level
	82Ø PVC Duct For Tel./Internet Cable Lead In Below Ground Slab
	Main Incoming Cable For Power In 110Ø PVC Duct Below Ground Slab
ISB	Internet Switchboard
▲	Telephone Outlet
	Computer Network Outlet
	Emergency Light
M	Electricity Meter

Notes: -

- All 13A Power Outlets For Kitchen Hood Or Under Cabinet Or Wardrobe Lights At 1800mm From F.F.L.
- All Twin Sockets At 300mm From F.F.L. Except Located At Kitchen Cupboard Area Which Shall Be At 1200mm From F.F.L.
- All Computer, TV And Telephone Points At 300mm From F.F.L.
- All 20A Switched Neon Indicator At 1200mm From F.F.L.

Legend

	Refrigerant Pipes
	25Ø Condensate Drain Pipe
	40Ø Condensate Drain Riser Pipe
AC	Wall Mount Air Conditioner
CU	Outdoor Condensing Unit
	Ceiling Mounted Exhaust Fan 90m3/hr
	Wall Mounted Exhaust Fan
	Single Intake, Centrifugal, External Motor, 800m3/hr
	Fresh Air Intake Grille/screen 1200 x 600

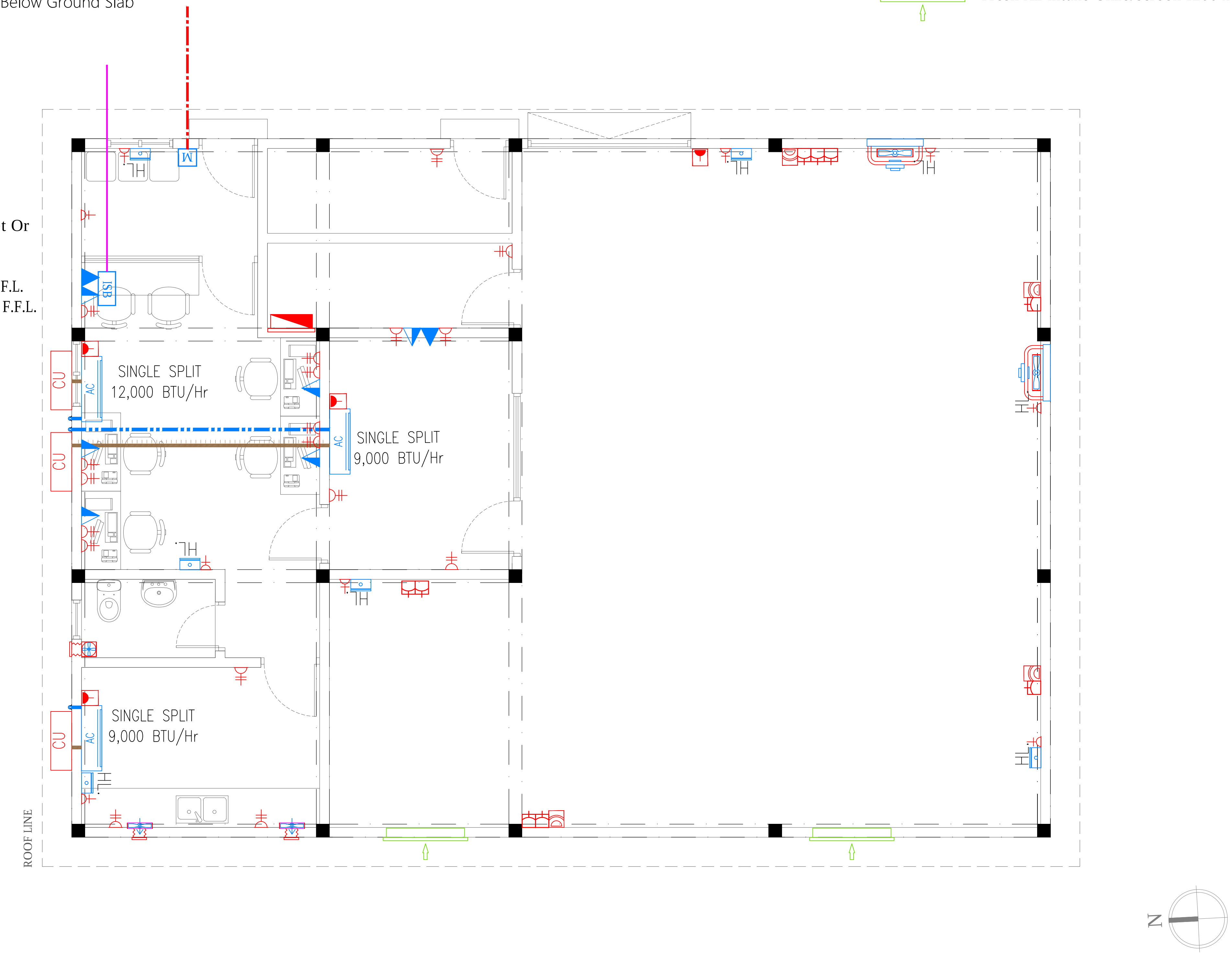

GROUND FLOOR POWER AND ACV LAYOUT

1:75

Legend

Note:

- All 13A Power Outlets For Kitchen Hood Or Under Cabinet Or Wardrobe Lights At 1800mm From F.F.L.
- All Twin Sockets At 300mm From F.F.L. Except Located At Kitchen Cupboard Area Which Shall Be At 1200mm From F.F.L.
- All Computer, TV And Telephone Points At 300mm From F.F.L.
- All 20A Switched Neon Indicator At 1200mm From F.F.L.

R01	NOV 2020		H.R.	M.R.	M.R.
REV. NO.	Date	Revision Description	Drawn	Chkd	Appd.

Title:
Consultancy Services for Survey, Design and EIA works of Water Supply and Sewerage Facilities
in 6 Islands, Maldives – Package 6
Sub Title:
Water Supply System in L. Kunahandhoo

Client:
Ministry of National Planning, Housing and Infrastructure, Republic of Maldives

EPOCH ASSOCIATES
T: +960 333 3528
E: info@epoch.associates
W: wwww.epoch.associates
A: G. Rosary West,
Husnuheenaa Magu, Male', Maldives

FEEDBACK INFRA
Making Infrastructure Happen

Drawn: H.R.
Checked: M.R.
Designed: H.R.
Approved: M.R.
Date: Nov 2020
SCALE (A3): 1:75
Project No: EP-WS/2019/06
Rev: R-01
Page: PAC-01

Legend

▲ DCP	DCP Extinguisher (load: 6kg) In Polycarbonate Enclosure
▲ CO2	CO_2 Extinguisher (load: 2kg) In Polycarbonate Enclosure
▲ H2O	H_2O Extinguisher (load: 9L) In Polycarbonate Enclosure
▣	Manual Call Point
SD	Smoke Detector
HD	Heat Detector
⊗	Beacon
◠	Sounder Bell
FB	Fire Blanket
- - -	2.5mm^2 Fire Retardant Low Smoke (FRLS) Cables In FRLS Conduits
FACP	Fire Alarm Control Panel
EXIT	Exit Sign

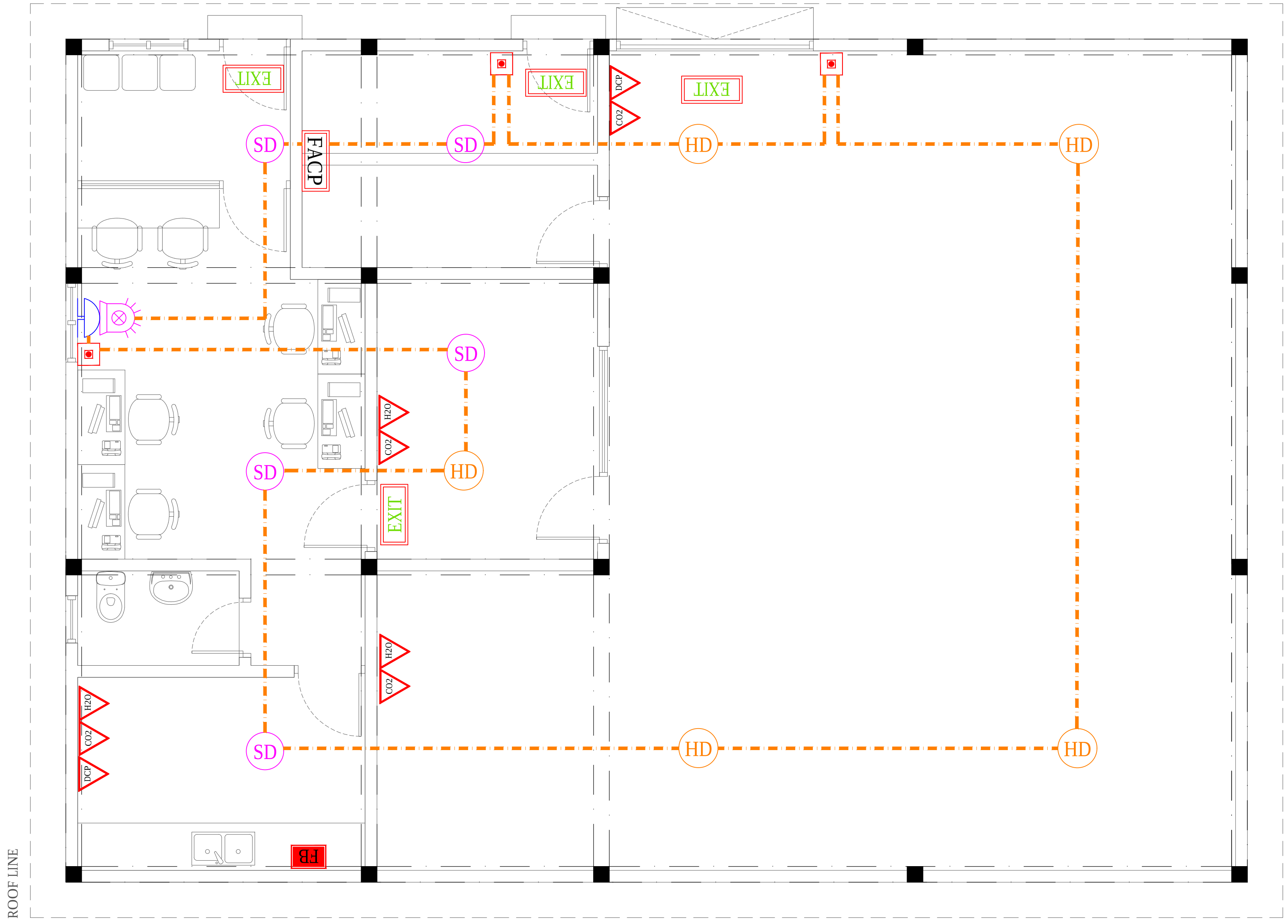

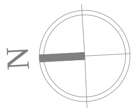

GROUND FLOOR FDP LAYOUT

1:75

Legend

Note:

REV. NO.	Date	Revision Description	Drawn	Chkd	Appd.
R01	NOV 2020		H.R.	M.R.	M.R.

Title:
Consultancy Services for Survey, Design and EIA works of Water Supply and Sewerage Facilities
in 6 Islands, Maldives – Package 6
Sub Title:
Water Supply System in L. Kunahandhoo

Client:
Ministry of National Planning, Housing and Infrastructure, Republic of Maldives

EPOCH ASSOCIATES
T: +960 333 3528
E: info@epoch.associates
W: wwww.epoch.associates
A: G. Rosary West,
Husnuheenaa Magu, Male', Maldives

FEEDBACK INFRA
Making Infrastructure Happen

Drawn: H.R.
Checked: M.R.
Designed: H.R.
Approved: M.R.
Date: Nov 2020
SCALE (A3): 1:75
Project No: EP-WS/2019/06
Rev: R-01
Page: FDP-01

Legend

⊕	Ceiling Light (12W)
◉	Recessed Ceiling Light (12W)
	Weather Proof Wall Light IP55 (12W)
●	60W, HPS, Low Bay Light
1 2 3 4	Light Switch (1 Gang - 4 Gang)
1 2 3 4	Two Way Light Switches (1 Gang - 4 Gang)
	SINGLE INTAKE, CENTRIFUGAL, EXTERNAL MOTOR, 800M3/Hr
	Ceiling Mounted Exhaust Fan 90m3/hr
	Wall Mounted Exhaust Fan
— — —	Cement Board False Ceiling [200mm below beam bottom]
— · —	Plaster Board False Ceiling [200mm below beam bottom]
- - - -	Plaster Board False Ceiling [at roof beam top level]

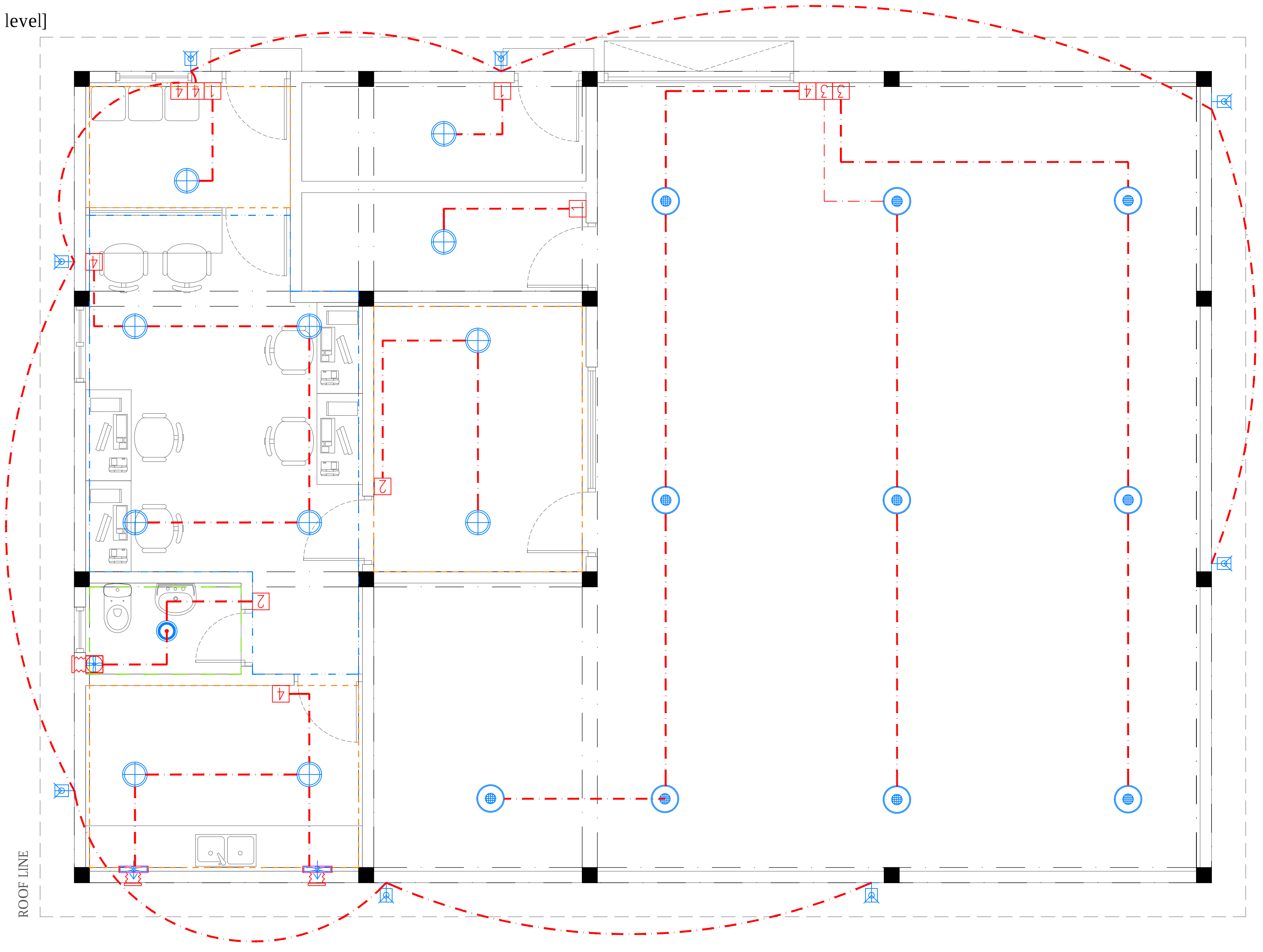

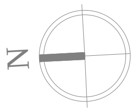

GROUND FLOOR LIGHTING LAYOUT

1:75

Legend

Note:

REV. NO.	Date	Revision Description	Drawn	Chkd	Appd.
R01	NOV 2020		H.R.	M.R.	M.R.

Title:
Consultancy Services for Survey, Design and EIA works of Water Supply and Sewerage Facilities
in 6 Islands, Maldives – Package 6
Sub Title:
Water Supply System in L. Kunahandhoo

Client:
Ministry of National Planning, Housing and Infrastructure, Republic of Maldives

EPOCH ASSOCIATES
T: +960 333 3528
E: info@epoch.associates
W: wwww.epoch.associates
A: G. Rosary West,
Husnuheenaa Magu, Male', Maldives

FEEDBACK INFRA
Making Infrastructure Happen

Drawn: H.R.
Checked: M.R.
Designed: H.R.
Approved: M.R.
Date: Nov 2020
SCALE (A3): 1:75
Project No: EP-WS/2019/06
Rev: R-01
Page: EL-01

Legend

- 16Ø Cold Water Supply To Basin Faucet
- 16Ø Cold Water Supply To Bidet Shower
- 16Ø Cold Water Supply To Wall Tap
- 16Ø Cold Water Supply To Cistern
- Gate Valve
- Rise In Wall
- MWSC Meter
- 25Ø Cold Water Supply Pipes Running Underground
- 20Ø Cold Water Supply Pipes Running In Wall

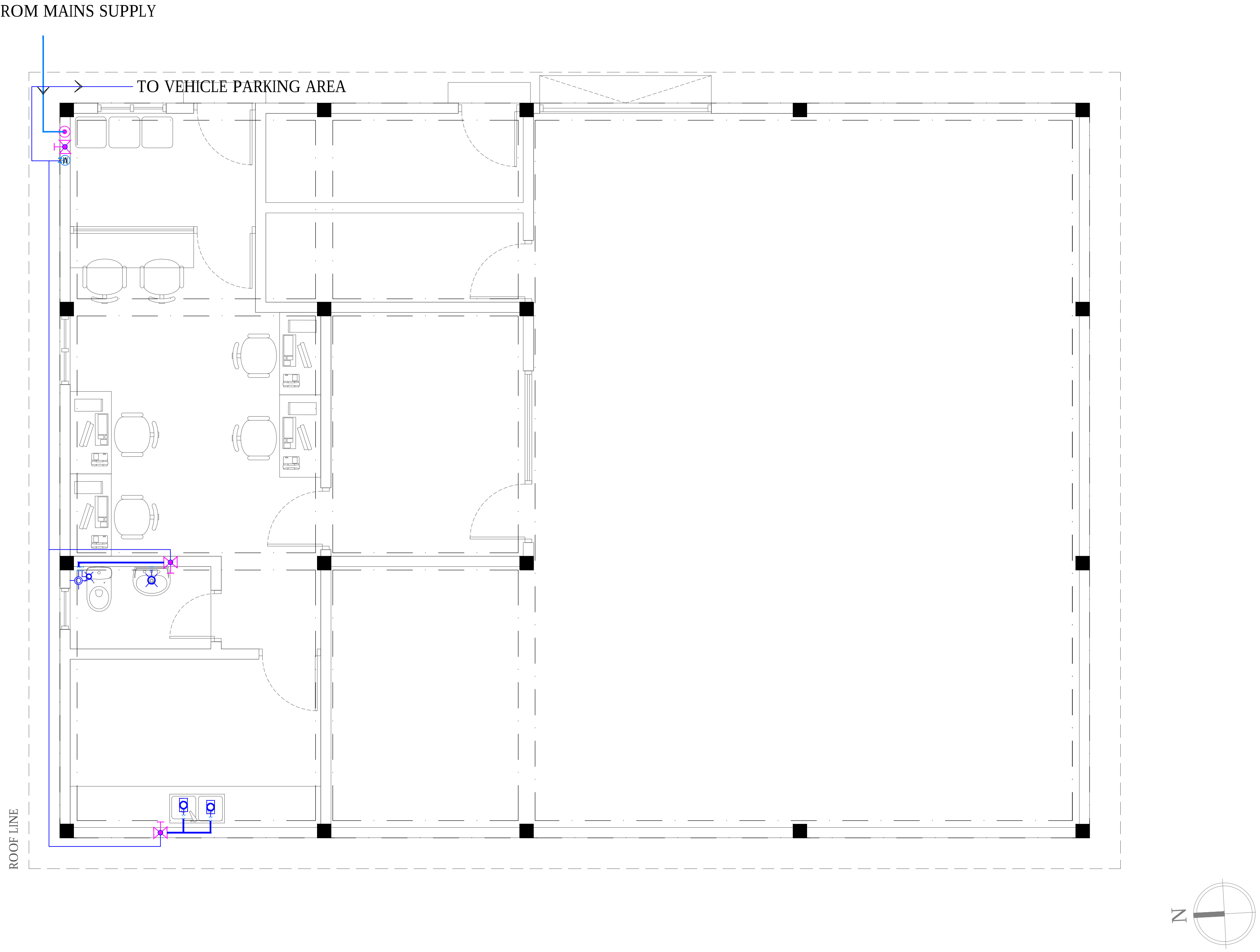

GROUND FLOOR PLUMBING LAYOUT

1:75

Legend

Note:

R01	NOV 2020		H.R.	M.R.	M.R.
REV. NO.	Date	Revision Description	Drawn	Chkd	Appd.

Title:
Consultancy Services for Survey, Design and EIA works of Water Supply and Sewerage Facilities
in 6 Islands, Maldives – Package 6

Sub Title:
Water Supply System in L. Kunahandhoo

Client:
Ministry of National Planning, Housing and Infrastructure, Republic of Maldives

EPOCH ASSOCIATES
T: +960 333 3528
E: info@epoch.associates
W: wwww.epoch.associates
A: G. Rosary West,
Husnuheenaa Magu, Male', Maldives

FEEDBACK INFRA
Making Infrastructure Happen

Drawn: H.R.
Checked: M.R.
Designed: H.R.
Approved: M.R.
Date: Nov 2020
SCALE (A3): 1:75
Project No: EP-WS/2019/06
Rev: R-01
Page: PL-01

Legend

⊡	Floor Drain
⊞	Floor Gully
━━▷	82Ø Soil Pipe (uPVC Pipe)
▷	82Ø Soil Vent Pipe (uPVC Pipe)
-·-·▸	63Ø Waste Pipe (uPVC Pipe)
▸	63Ø Waste Vent Pipe (uPVC Pipe)
-·-·→	40Ø Waste Pipe (uPVC Pipe)
━━○	50Ø Manhole Vent Pipe (uPVC Pipe)
- - -▷	110Ø Rain Water Pipes (uPVC Pipe)
▨	Gully Trap
●	110Ø Rainwater Outlet
⊠	Clean Out Point
○-⊸	Bottle Trap

Notes: -

-All Drainage Pipes Should Have At A Slope Of 1/150
-All Floor Drains Should Have 'P' Traps

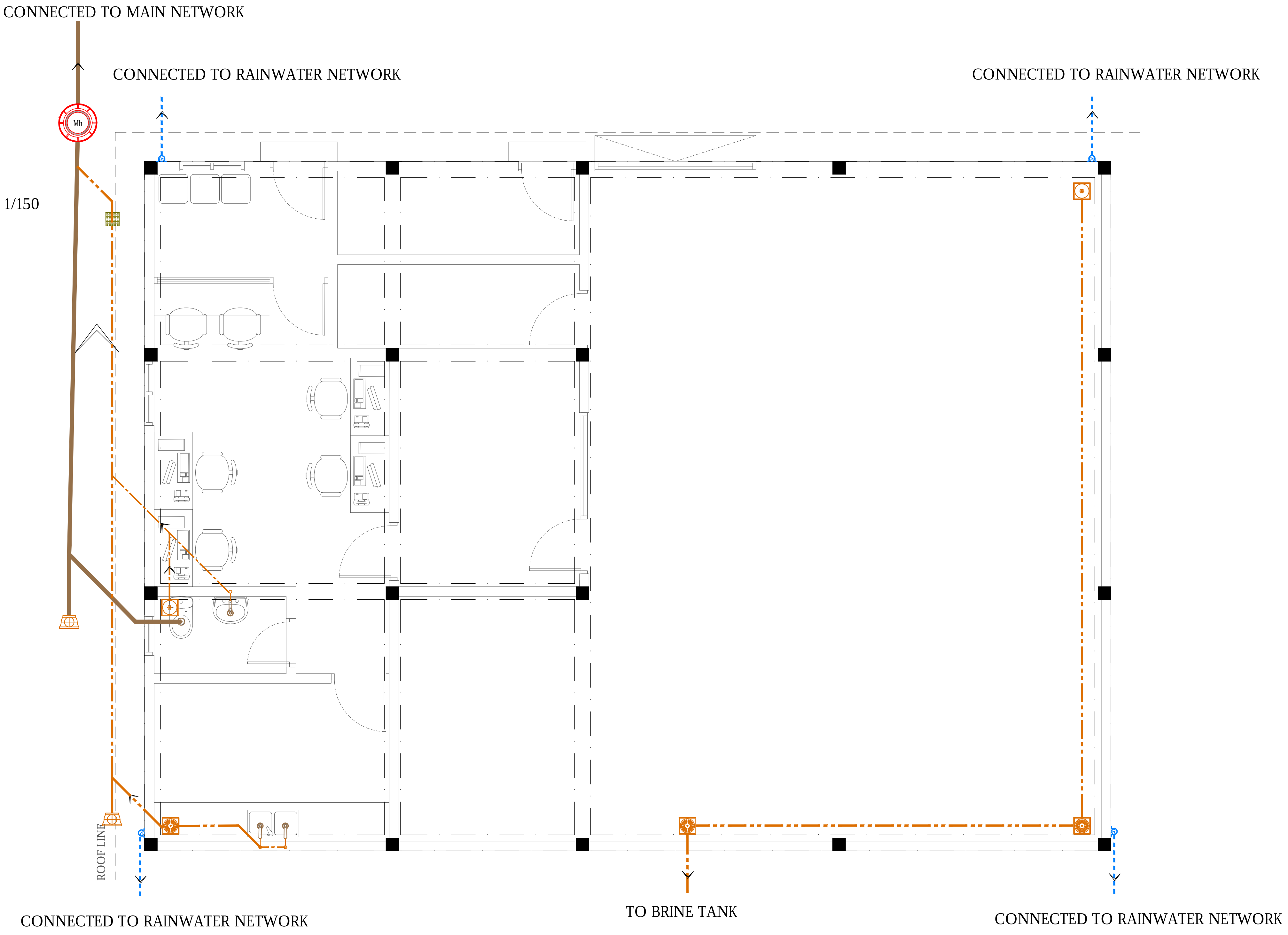
CONNECTED TO MAIN NETWORK
CONNECTED TO RAINWATER NETWORK
CONNECTED TO RAINWATER NETWORK
Mh
ROOF LINE
CONNECTED TO RAINWATER NETWORK
TO BRINE TANK
CONNECTED TO RAINWATER NETWORK

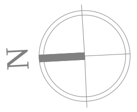

GROUND FLOOR DRAINAGE LAYOUT

1:75

Legend

Note:

-All Drainage Pipes Should Have At A Slope Of 1/150
-All Floor Drains Should Have 'P' Traps

R01	NOV 2020		H.R.	M.R.	M.R.
REV. NO.	Date	Revision Description	Drawn	Chkd	Appd.

Title:

Consultancy Services for
Survey, Design and EIA works of
Water Supply and Sewerage
Facilities
in 6 Islands, Maldives – Package 6

Sub Title:
Water Supply System in L. Kunahandhoo

Client:
Ministry of National Planning, Housing and
Infrastructure, Republic of Maldives

EPOCH ASSOCIATES

T: +960 333 3528
E: info@epoch.associates
W: wwww.epoch.associates
A: G. Rosary West,
Husnuheenaa Magu, Male', Maldives

FEEDBACK INFRA
Making Infrastructure Happen

Drawn: H.R.
Checked: M.R.
Designed: H.R.
Approved: M.R.
Date: Nov 2020
SCALE (A3): 1:75
Project No: EP-WS/2019/06
Rev: R-01
Page: DR-01

Legend

⊙	Floor Drain
⊕	Floor Gully
━━▷	82Ø Soil Pipe (uPVC Pipe)
▷	82Ø Soil Vent Pipe (uPVC Pipe)
-··-··→	63Ø Waste Pipe (uPVC Pipe)
▸	63Ø Waste Vent Pipe (uPVC Pipe)
-·-·-→	40Ø Waste Pipe (uPVC Pipe)
━━▷	50Ø Manhole Vent Pipe (uPVC Pipe)
- - - -▷	110Ø Rain Water Pipes (uPVC Pipe)
▨	Gully Trap
●	110Ø Rainwater Outlet
▨	Clean Out Point
○─●	Bottle Trap

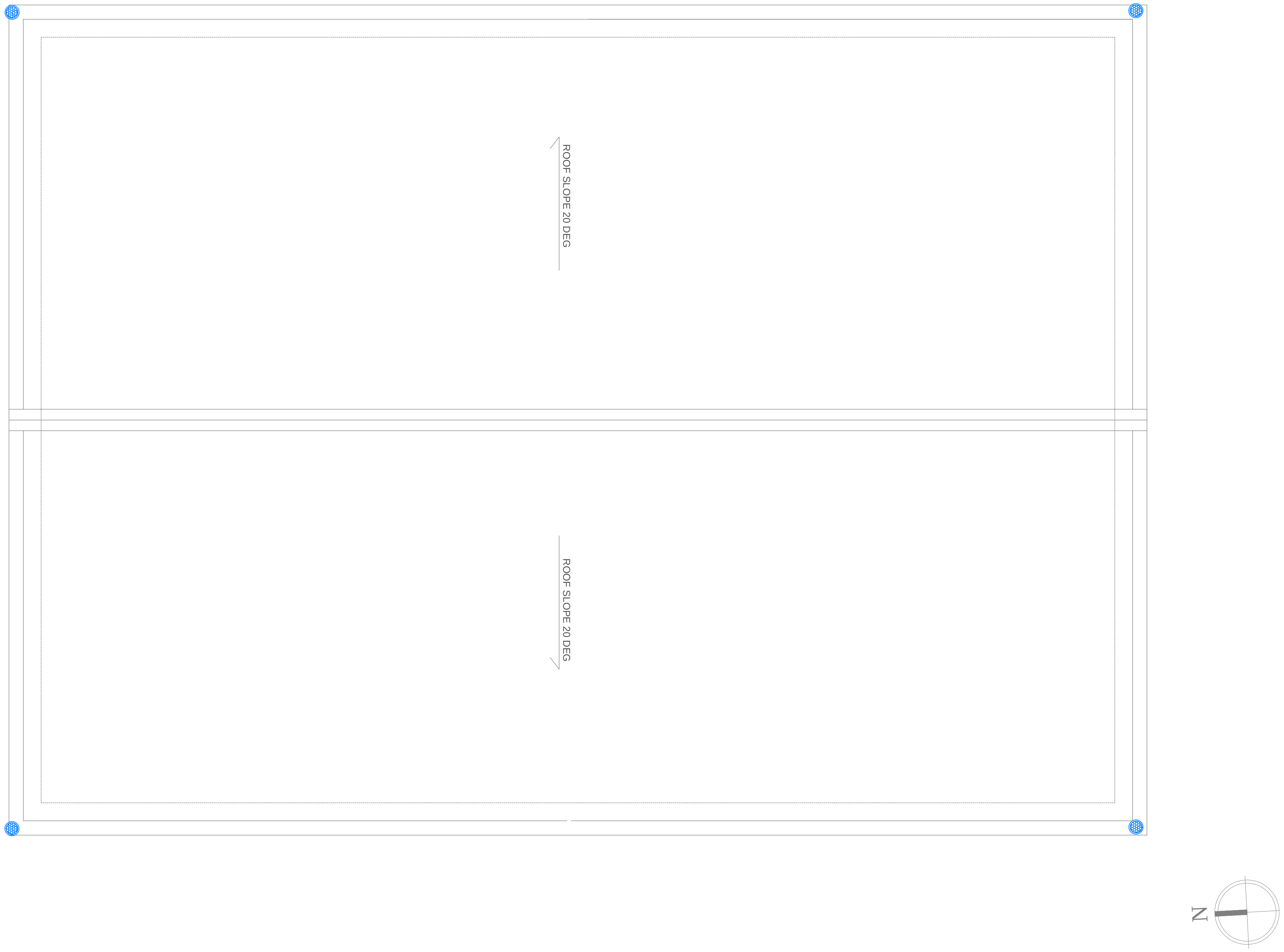

ROOF DRAINAGE LAYOUT

1:75

Legend

Note:

-All Drainage Pipes Should Have At A Slope Of 1/150
-All Floor Drains Should Have 'P' Traps

R01	NOV 2020		H.R.	M.R.	M.R.
REV. NO.	Date	Revision Description	Drawn	Chkd	Appd.

Title:
Consultancy Services for Survey, Design and EIA works of Water Supply and Sewerage Facilities
in 6 Islands, Maldives – Package 6
Sub Title:
Water Supply System in L. Kunahandhoo

Client:
Ministry of National Planning, Housing and Infrastructure, Republic of Maldives

EPOCH ASSOCIATES
T: +960 333 3528
E: info@epoch.associates
W: wwww.epoch.associates
A: G. Rosary West,
Husnuheenaa Magu, Male', Maldives

FEEDBACK INFRA
Making Infrastructure Happen

Drawn: H.R.
Checked: M.R.
Designed: H.R.
Approved: M.R.
Date: Nov 2020
SCALE (A3): 1:75
Project No: EP-WS/2019/06
Rev: R-01
Page: DR-02

Legend

▣ 100W LED Flood Light IP65 @ 6m Light Post

▽ Solar Powered LED Gate Lights (12W)

1 2 3 4 Light Switch (1 Gang - 4 Gang)

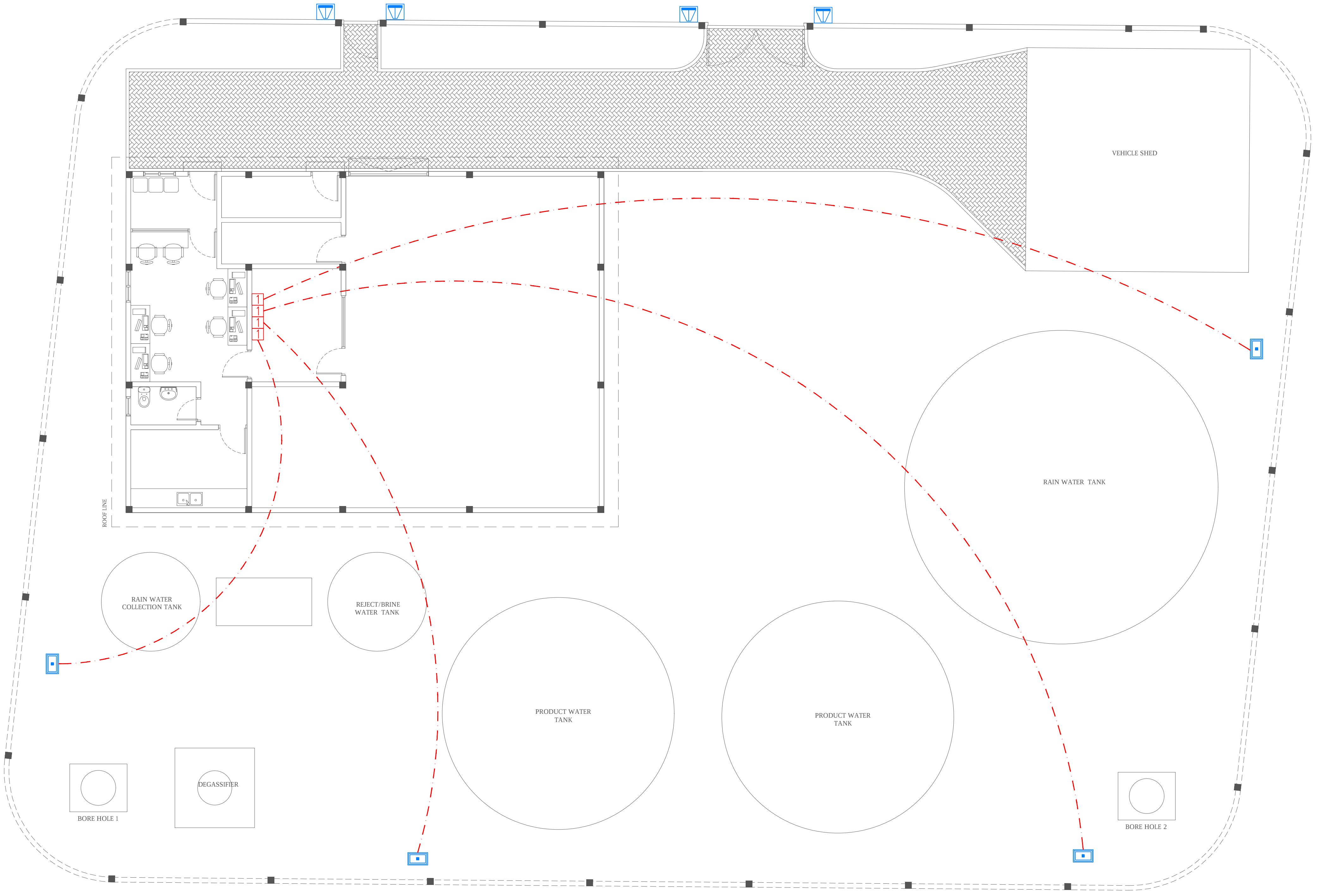
VEHICLE SHED
RAIN WATER TANK
ROOF LINE
1
1
1
1
RAIN WATER COLLECTION TANK
REJECT/BRINE WATER TANK
PRODUCT WATER TANK
PRODUCT WATER TANK
DEGASSIFIER
BORE HOLE 1
BORE HOLE 2

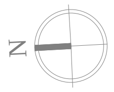

SITE LIGHTING LAYOUT

1:150

Legend

Note:

R01	NOV 2020		H.R.	M.R.	M.R.
REV. NO.	Date	Revision Description	Drawn	Chkd	Appd.

Title:
Consultancy Services for Survey, Design and EIA works of Water Supply and Sewerage Facilities
in 6 Islands, Maldives – Package 6
Sub Title:
Water Supply System in L. Kunahandhoo

Client:
Ministry of National Planning, Housing and Infrastructure, Republic of Maldives

EPOCH ASSOCIATES
T: +960 333 3528
E: info@epoch.associates
W: wwww.epoch.associates
A: G. Rosary West,
Husnuheenaa Magu, Male', Maldives

FEEDBACK INFRA
Making Infrastructure Happen

Drawn: H.R.
Checked: M.R.
Designed: H.R.
Approved: M.R.
Date: Nov 2020
SCALE (A3): 1:150
Project No: EP-WS/2019/06
Rev: R-01
Page: EL-02

Legend

- 16Ø Cold Water Supply To Wall Tap
- Gate Valve
- Rise In Wall
- MWSC Meter
- 25Ø Cold Water Supply Pipes Running Underground
- 20Ø Cold Water Supply Pipes Running Along Wall

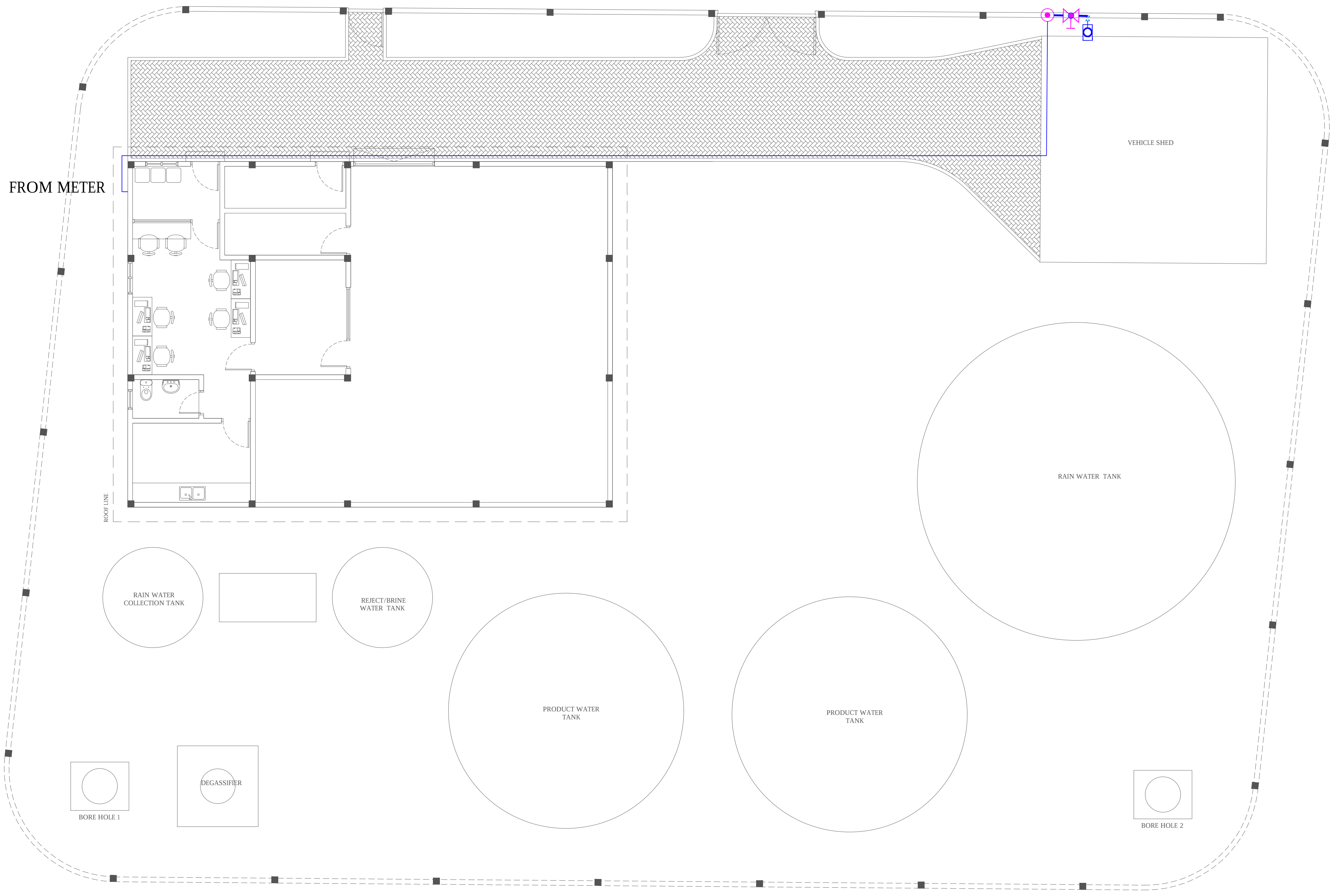

FROM METER
VEHICLE SHED
ROOF LINE
RAIN WATER TANK
RAIN WATER COLLECTION TANK
REJECT/BRINE WATER TANK
PRODUCT WATER TANK
PRODUCT WATER TANK
DEGASSIFIER
BORE HOLE 1
BORE HOLE 2

VEHICLE PARKING AREA - PLUMBING LAYOUT

1:150

Legend

Note:

R01	NOV 2020		H.R.	M.R.	M.R.
REV. NO.	Date	Revision Description	Drawn	Chkd	Appd.

Title:
Consultancy Services for
Survey, Design and EIA works of
Water Supply and Sewerage
Facilities
in 6 Islands, Maldives – Package 6

Sub Title:
Water Supply System in L. Kunahandhoo

Client:
Ministry of National Planning, Housing and
Infrastructure, Republic of Maldives

EPOCH ASSOCIATES
T: +960 333 3528
E: info@epoch.associates
W: wwww.epoch.associates
A: G. Rosary West,
Husnuheenaa Magu, Male', Maldives

FEEDBACK INFRA
Making Infrastructure Happen

Drawn: H.R.
Checked: M.R.
Designed: H.R.
Approved: M.R.
Date: Nov 2020
SCALE (A3): 1:150
Project No: EP-WS/2019/06
Rev: R-01
Page: PL-02

Legend

- ▣ Floor Drain
- ○ 40Ø Stub For Washing Machine Or Tub
- ⟶ 82Ø Soil Pipe (uPVC Pipe)
- ▸ 82Ø Soil Vent Pipe (uPVC Pipe)
- ⇢ 63Ø Waste Pipe (uPVC Pipe)
- ▸ 63Ø Waste Vent Pipe (uPVC Pipe)
- ⇢ 40Ø Waste Pipe (uPVC Pipe)
- ⟶ 50Ø Manhole Vent Pipe (uPVC Pipe)
- ⇢ 110Ø Rain Water Pipes (uPVC Pipe)
- ■ Gully Trap
- ▤ Clean Out Point

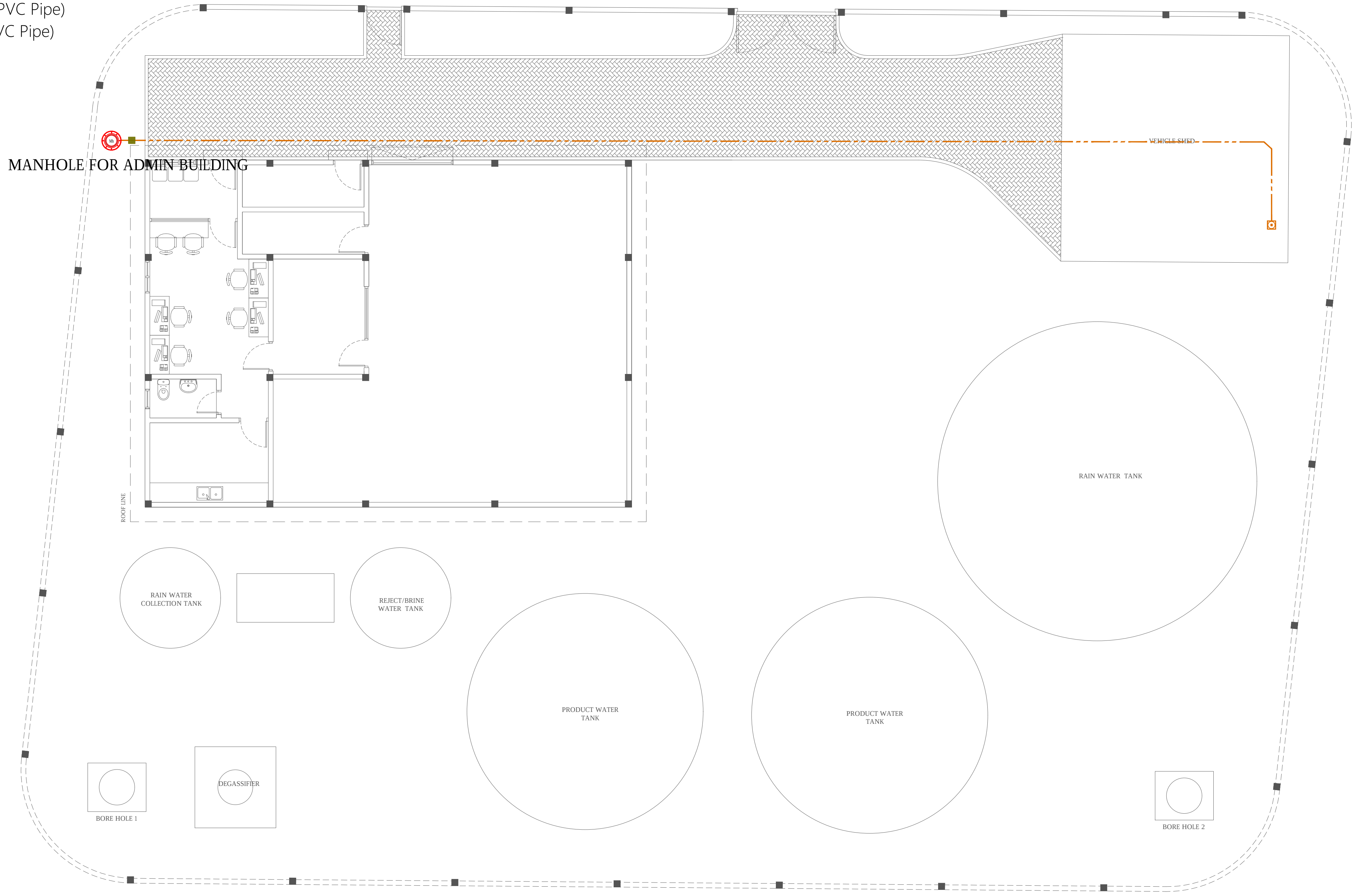
MANHOLE FOR ADMIN BUILDING
MH
VEHICLE SHED
ROOF LINE
RAIN WATER TANK
RAIN WATER COLLECTION TANK
REJECT/BRINE WATER TANK
PRODUCT WATER TANK
PRODUCT WATER TANK
DEGASSIFIER
BORE HOLE 1
BORE HOLE 2

VEHICLE PARKING AREA - DRAINAGE LAYOUT

1:150

Legend

Note:

-All Drainage Pipes Should Have At A Slope Of 1/150
-All Floor Drains Should Have 'P' Traps

R01	NOV 2020		H.R.	M.R.	M.R.
REV. NO.	Date	Revision Description	Drawn	Chkd	Appd.

Title:
Consultancy Services for Survey, Design and EIA works of Water Supply and Sewerage Facilities
in 6 Islands, Maldives – Package 6

Sub Title:
Water Supply System in L. Kunahandhoo

Client:
Ministry of National Planning, Housing and Infrastructure, Republic of Maldives

EPOCH ASSOCIATES

T: +960 333 3528
E: info@epoch.associates
W: wwww.epoch.associates
A: G. Rosary West,
Husnuheenaa Magu, Male', Maldives

FEEDBACK INFRA
Making Infrastructure Happen

Drawn: H.R.
Checked: M.R.
Designed: H.R.
Approved: M.R.
Date: Nov 2020
SCALE (A3): 1:150
Project No: EP-WS/2019/06
Rev: R-01
Page: PL-02