DETAILS R/C

SCALE 1:20

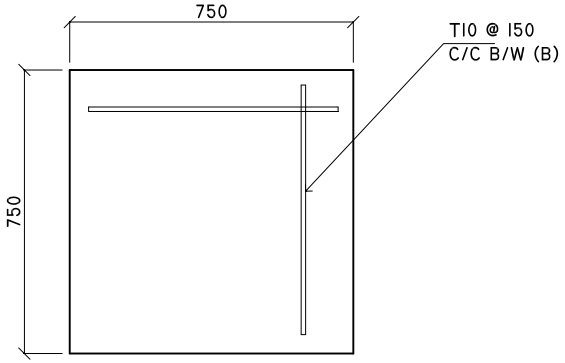

F1

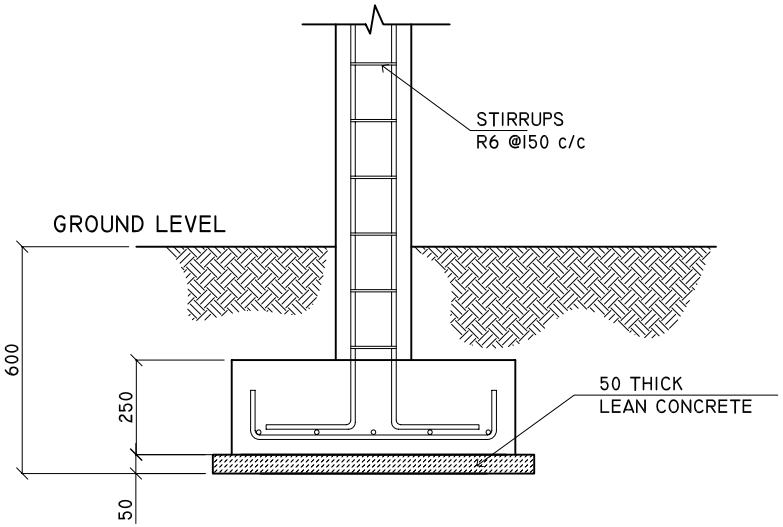

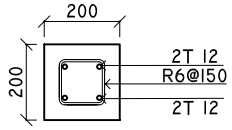

COVER: 50MM

COLUMN (CL)

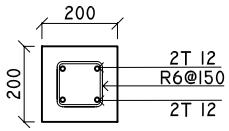

COVER: 50MM

BEAM (TB)

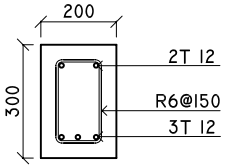

COVER: 50MM

BEAM (B1)

AMMENDMENTS :

PROJECT:

OVER HEAD WATER TANK TOWER

CONTENTS: *AS GIVEN*

PROJECT MANAGER:

DESIGNER: *ARIZ*

CIV/STR. ENGINEER: *ARIF*

SURVEYED BY: -

DRAWN BY: *ARIZ*

CHECKED BY:

DATE : *MAY 2005*

FILE NAME :

SHEET NO. : /

INFRASTRUCTURE DEVELOPMENT

MINISTRY OF HEALTH
AMEENEENEE MAGU,
MALE, REPUBLIC OF MALDIVES
TEL: 328887 FAX: 327909