MID HOSPITAL PROJECT

CLIENT: MINISTRY OF HEALTH

DESIGN : SURVEY , DESIGN AND DEVELOPMENT SECTION | MTCC PLC

DATE: 19 AUGUST 2020

COPYRIGHT All plans, sketches, drawings, graphic representations and specifications prepared by MTCC Plc are instruments of service. The copyright and ownership of both the design and these instruments of service belong to the MTCC Plc and may not be used for any other project, or sold, or offered for sale by any party other than MTCC Plc unless the MTCC Plc has given written consent. Copies of the documents submitted to the client prepared by MTCC Plc maybe used as they were intended; once; and on the same site and project.

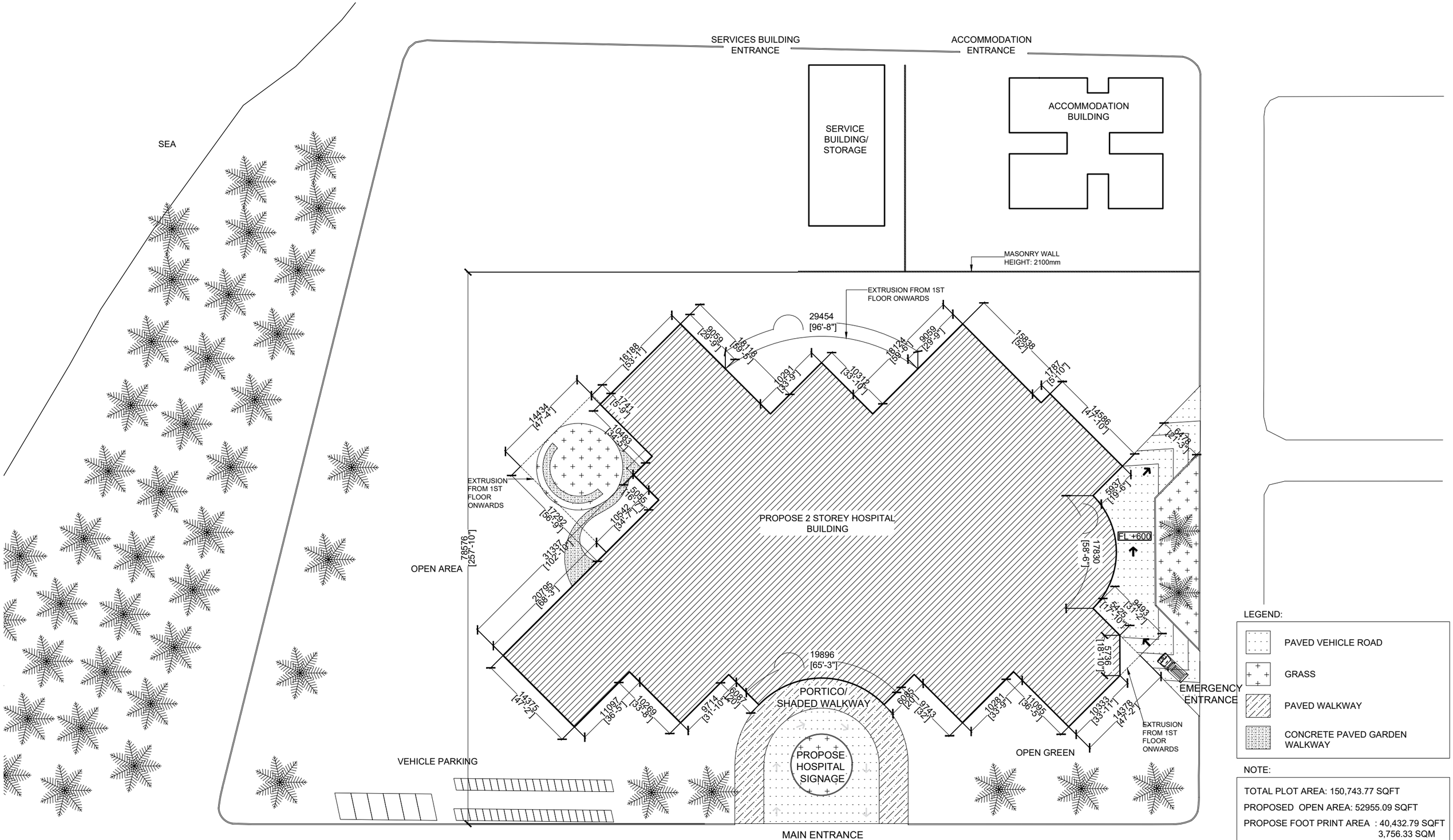

LOCATION PLAN

SCALE 1:100

0 0.5 1 2 4 METERS

LEGEND:

- PAVED VEHICLE ROAD
- GRASS
- PAVED WALKWAY
- CONCRETE PAVED GARDEN WALKWAY

NOTE:

TOTAL PLOT AREA: 150,743.77 SQFT

PROPOSED OPEN AREA: 52955.09 SQFT

PROPOSE FOOT PRINT AREA : 40,432.79 SQFT
3,756.33 SQM

PROPOSED BUILD UP AREA: 121,298.37 SQFT
11,268.99 SQM

M T C C
MALDIVES TRANSPORT & CONTRACTING COMPANY PLC
SURVEY,DESIGN AND DEVELOPMENT SECTION
CONSTRUCTION AND PROJECTS MANGEMENT DEPARTMENT,
MTCC TOWER, BODU THAKURUFAANU MAGU, MALE 20181,
REPUBLIC OF MALDIVES,
PHONE:- (960) 332 6822,FAX: - (960) 333 2835
E-MAIL: design.development@mtcc.com.mv

PROJECT TITLE	MID HOSPITAL PROJECT
DRAWING TITLE	AS GIVEN
CLIENT & ADDRESS	MINISTRY OF HEALTH
PROJECT LOCATION	-
DESIGN ARCHITECT:	SURVEYING, DESIGN AND DEVELOPMENT SECTION
ENGINEER:	IBRAHIM THOAM
STRUCTURAL CHECKER:	ABDULLA RAMEEZ
ARCHITECT:	AMINATH ZOONA
ARCHITECTURAL CHECKER:	IRFAN WAHEED
PAPER	A3
SCALE	AS GVN
DRAWN BY:	AMINATH SAMAHA
CHECKED BY:	HASSAN SHAHULAN
DATE	19-08-2020

REV	DESCRIPTION	DATE	APPR

SHEET IDENTIFICATION NUMBER

A1.01

SHEET TITLE

01

COPYRIGHT All plans, sketches, drawings, graphic representations and specifications prepared by the Architect(s) & Engineer(s) are instruments of service. The copyright and ownership of both the design and these instruments of service belong to the Architect(s) & Engineer(s) and may not be used for any other project, or sold, or offered for sale by any party other than the Architect/Engineer unless the Architect/Engineer has given written consent. Copies of the documents submitted to the client prepared by the Architect/Engineer maybe used as they were intended; once; and on the same site and project.

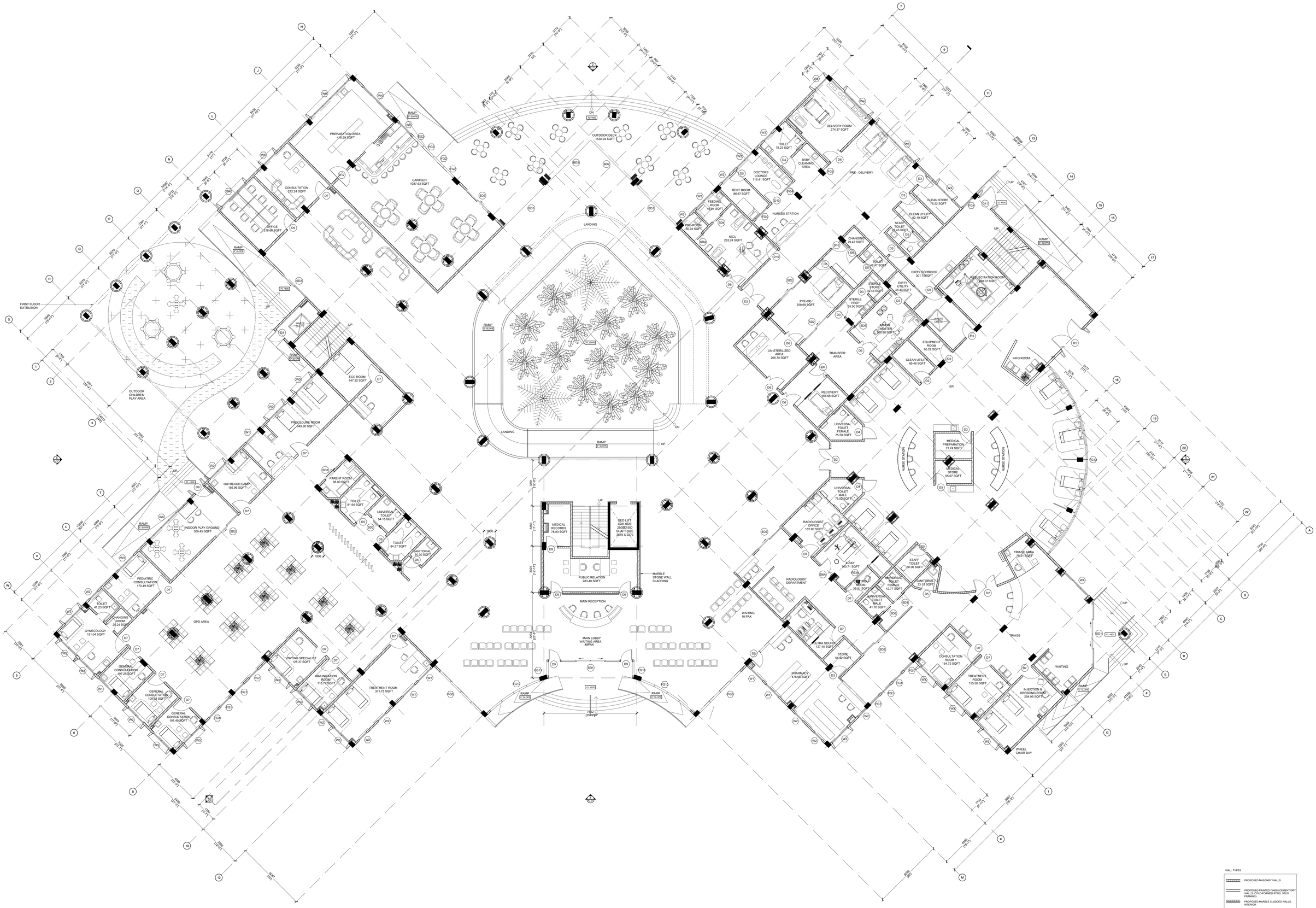

GROUND FLOOR PLAN

SCALE 1:100

0 2.5 4 2 4 METERS

WALL TYPES

- PROPOSED MASONRY WALLS
- PROPOSED PAINTED FINISH CEMENT DRY WALLS (COLD-FORMED STEEL STUD FRAMING)
- PROPOSED MARBLE CLADDED WALLS, INTERIOR
- PROPOSED SOLID BLOCK WALLS
- PROPOSED COLUMNS

ARCHITECT	
PROJECT	
DRAWING TITLE	GROUND FLOOR PLAN
DRAWING NO.	A1.02
SCALE	1:100
DATE	

PRIVATE ROOM 257.61 SQFT
TOILET 60.62 SQFT
PRIVATE ROOM 257.33 SQFT
TOILET 59.71 SQFT
NURSE LOUNGE 170.27 SQFT
TOILET 63.35 SQFT
PRIVATE WARD WAITING AREA 10 PAX
NURSE STATION
WASH AREA
CLEAN UTILITY 46.20 SQFT
EQUIPMENT ROOM 60.26 SQFT
DIRTY CORRIDOR
MEDICINE STORE 50.26 SQFT
MEDICINE PREPARATION 41.73 SQFT
DIRT UTILITY
WAITE DISTR.
NURSE STATION
GYNECOLOGY WARD 500.98 SQFT
TOILET 59.68 SQFT
TOILET 59.48 SQFT
PEDIATRIC WARD 603.46 SQFT
PLAY AREA 136.45 SQFT
OUTDOOR PLAY AREA 116.31 SQFT
GLASS RAILING
MEDICINE STORE 61.06 SQFT
TOILET 59.38 SQFT
EQUIPMENT ROOM 55.57 SQFT
MEDICINE PREPARATION 39.62 SQFT
CLEAN UTILITY 61.24 SQFT
NURSE STATION
MALE WARD 547.29 SQFT
TOILET 63.68 SQFT
TOILET 55.87 SQFT
FEMALE WARD 642.87 SQFT
OPEN GREEN 87.93 SQFT
GLASS RAILING
PARENT ROOM 67.96 SQFT
TOILET 54.29 SQFT
UNIVERSAL TOILET 53.23 SQFT
TOILET 63.38 SQFT
JANITORIAL 29.62 SQFT
TOILET 58.47 SQFT
ICU 676.27 SQFT
DIRTY UTILITY 49.88 SQFT
MEDICINE STORE 52.86 SQFT
MEDICINE PREPARATION 44.71 SQFT
CLEAN UTILITY 50.08 SQFT
EQUIPMENT ROOM 54.90 SQFT
PRAYER ROOM M 161.22 SQFT
PRAYER ROOM F 153.08 SQFT
TEA ROOM 111.79 SQFT
INFO COUNTER
GENERAL STORAGE 69.68 SQFT
BED LIFT CAR SIZE 2500K1500 SHAFT SIZE 3670 X 2270
GLASS RAILING
OPEN VOID
UP
DN
AUTO CLAVE
MEDI PREPARATION 43.73 SQFT
STAFF TOILET 34.08 SQFT
STAFF PANTRY 144.53 SQFT
MICROBIOLOGY 199.17 SQFT
LABORATORY 615.89 SQFT
BLOOD BANK 98.88 SQFT
LAB OFFICE 173.17 SQFT
DISPOSAL AREA 84.29 SQFT
SERVICE CORRIDOR
WAITING AREA
MEDICAL STORE 123.18 SQFT
MEDICAL RECORDS 120.01 SQFT
DIRT UTILITY 114.84 SQFT
TRAINING ROOM 710.30 SQFT
WAITING AND REFRESHMENT AREA 760.82 SQFT
CONFERENCE HALL 1060.58 SQFT
PARENT ROOM 65.84 SQFT
TOILET 86.81 SQFT
UNIVERSAL TOILET 52.96 SQFT
TOILET 63.67 SQFT
JANITORIAL 29.65 SQFT
CENTRAL SERVER ROOM 85.37 SQFT
FILING ROOM 128.91 SQFT
TOILET 49.00 SQFT
TOILET 43.98 SQFT
TOILET 43.74 SQFT
TOILET 99.71 SQFT
DOCTOR LOUNGE 616.39 SQFT
MANAGER OFFICE 156.63 SQFT
MANAGER OFFICE 100.58 SQFT
OFFICE AREA 651.31 SQFT
DIRTY UTILITY 71.85 SQFT
ISOLATION WARD INTERIOR
PATIENT ENTR. 70.29 SQFT
ISOLATION ROOM 169.23 SQFT
PATIENT BATH 91.66 SQFT
INCINERATION ROOM 152.20 SQFT
PATIENT BATH 95.22 SQFT
UTILITY ROOM 102.28 SQFT
MEETING ROOM 360.76 SQFT
OPEN GREEN 264.10 SQFT

WALL TYPES
- PROPOSED MASONRY WALLS
- PROPOSED PAINTED FINISH CEMENT DRY WALL ON CONFORMED STEEL STUD FRAMING
- PROPOSED MARBLE CLADDED WALLS, INTERIOR
- PROPOSED COLUMNS

FIRST FLOOR PLAN
SCALE 1:100
0 5 10 METERS

A1.03

TERRACE FLOOR PLAN

SCALE 1:100

0 0.5 1 2 4 METERS

M T C C MALDIVES TRANSPORT & CONTRACTING COMPANY PLC	PROJECT TITLE: MID HOSPITAL PROJECT	CLIENT & ADDRESS: MINISTRY OF HEALTH	DESIGN ARCHITECT: SURVEYING, DESIGN AND DEVELOPMENT SECTION		SHEET IDENTIFICATION NUMBER
SURVEY,DESIGN AND DEVELOPMENT SECTION CONSTRUCTION AND PROJECTS MANGEMENT DEPARTMENT, MTCC TOWER, BODU THAKURUFAANU MAGU, MALE' 20181, REPUBLIC OF MALDIVES. PHONE: + (960) 332 6822,FAX: +(960) 333 2835 E-MAIL: design.development@mtcc.com.mv	DRAWING TITLE: AS GIVEN	PROJECT LOCATION: -	ENGINEER: IBRAHIM THOAM	STRUCTURAL CHECKER: ABDULLA RAMEEZ	A1.04
			ARCHITECT: AMINATH ZOONA	ARCHITECTURAL CHECKER: IRFAN WAHEED; PAPER: A0; SCALE: AS GVN	SHEET TITLE 04
			DRAWN BY: AMINATH SAMAHA	CHECKED BY: HASSAN SHAHULAN; DATE: 19-08-2020	

REV	DESCRIPTION	DATE	APPR

COPYRIGHT All plans, sketches, drawings, graphic representations and specifications prepared by the Architect(s) & Engineer(s) are instruments of service. The copyright and ownership of both the design and these instruments of service belong to the Architect(s) & Engineer(s) and may not be used for any other project, or sold, or offered for sale by any party other than the Architect/Engineer unless the Architect/Engineer has given written consent. Copies of the documents submitted to the client prepared by the Architect/Engineer maybe used as they were intended; once; and on the same site and project.

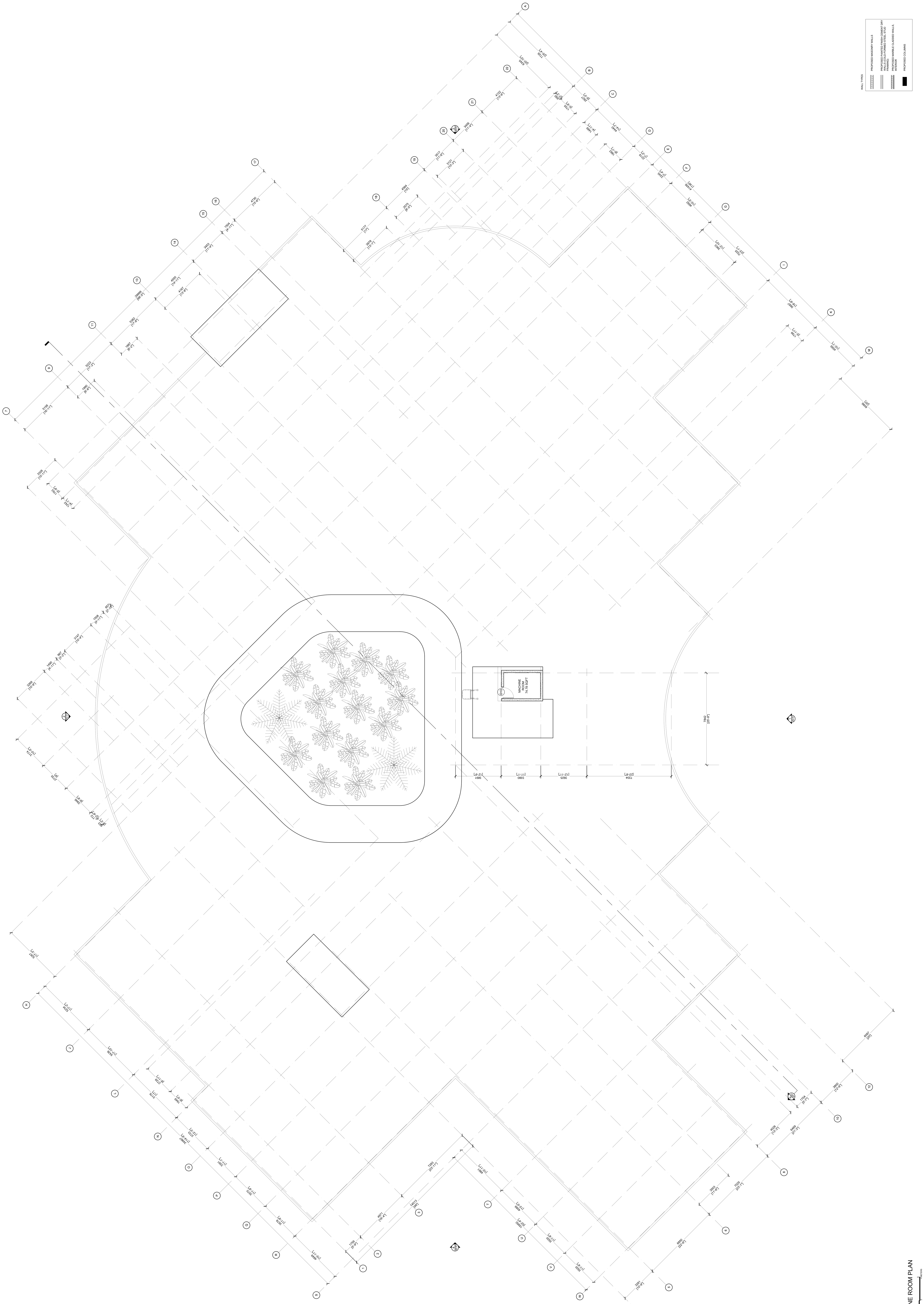

MTCC MALDIVES TRANSPORT & CONTRACTING COMPANY PLC SURVEY,DESIGN AND DEVELOPMENT SECTION CONSTRUCTION AND PROJECTS MANGEMENT DEPARTMENT, MTCC TOWER, BODU THAKURUFAANU MAGU, MALE' 20181, REPUBLIC OF MALDIVES. PHONE: + (960) 332 6822,FAX: +(960) 333 2835 E-MAIL: design.development@mtcc.com.mv	PROJECT TITLE MID HOSPITAL PROJECT	CLIENT & ADDRESS MINISTRY OF HEALTH	DESIGN ARCHITECT: SURVEYING, DESIGN AND DEVELOPMENT SECTION	
			ENGINEER: IBRAHIM THOAM	STRUCTURAL CHECKER: ABDULLA RAMEEZ
	DRAWING TITLE AS GIVEN	PROJECT LOCATION -	ARCHITECT: AMINATH ZOONA	ARCHITECTURAL CHECKER: IRFAN WAHEED · PAPER A0 · SCALE AS GVN
			DRAWN BY: AMINATH SAMAHA	CHECKED BY: HASSAN SHAHULAN · DATE 19-08-2020

REV	DESCRIPTION	DATE	APPR

SHEET IDENTIFICATION NUMBER
A1.05
SHEET TITLE
05

COPYRIGHT All plans, sketches, drawings, graphic representations and specifications prepared by the Architect(s) & Engineer(s) are instruments of service. The copyright and ownership of both the design and these instruments of service belong to the Architect(s) & Engineer(s) and may not be used for any other project, or sold, or offered for sale by any party other than the Architect/Engineer unless the Architect/Engineer has given written consent. Copies of the documents submitted to the client prepared by the Architect/Engineer maybe used as they were intended; once; and on the same site and project.

MACHINE ROOM ROOF SLAB PLAN

SCALE 1:100

0 0.5 1 2 4 METERS

N

MTCC MALDIVES TRANSPORT & CONTRACTING COMPANY PLC SURVEY,DESIGN AND DEVELOPMENT SECTION CONSTRUCTION AND PROJECTS MANGEMENT DEPARTMENT. MTCC TOWER, BODU THAKURUFAANU MAGU, MALE' 20181. REPUBLIC OF MALDIVES. PHONE: + (960) 332 6822,FAX: + (960) 333 2835 E-MAIL: design.development@mtcc.com.mv	PROJECT TITLE MID HOSPITAL PROJECT	CLIENT & ADDRESS MINISTRY OF HEALTH	DESIGN ARCHITECT: SURVEYING, DESIGN AND DEVELOPMENT SECTION
			ENGINEER: IBRAHIM THOAM / STRUCTURAL CHECKER: ABDULLA RAMEEZ
	DRAWING TITLE AS GIVEN	PROJECT LOCATION -	ARCHITECT: AMINATH ZOONA / ARCHITECTURAL CHECKER: IRFAN WAHEED / PAPER: A0 / SCALE: AS GVN
			DRAWN BY: AMINATH SAMAHA / CHECKED BY: HASSAN SHAHULAN / DATE: 19-08-2020

REV	DESCRIPTION	DATE	APPR

SHEET IDENTIFICATION NUMBER

A1.06

SHEET TITLE
06

COPYRIGHT All plans, sketches, drawings, graphic representations and specifications prepared by the Architect(s) & Engineer(s) are instruments of service. The copyright and ownership of both the design and these instruments of service belong to the Architect(s) & Engineer(s) and may not be used for any other project, or sold, or offered for sale by any party other than the Architect/Engineer unless the Architect/Engineer has given written consent. Copies of the documents submitted to the client prepared by the Architect/Engineer maybe used as they were intended; once; and on the same site and project.

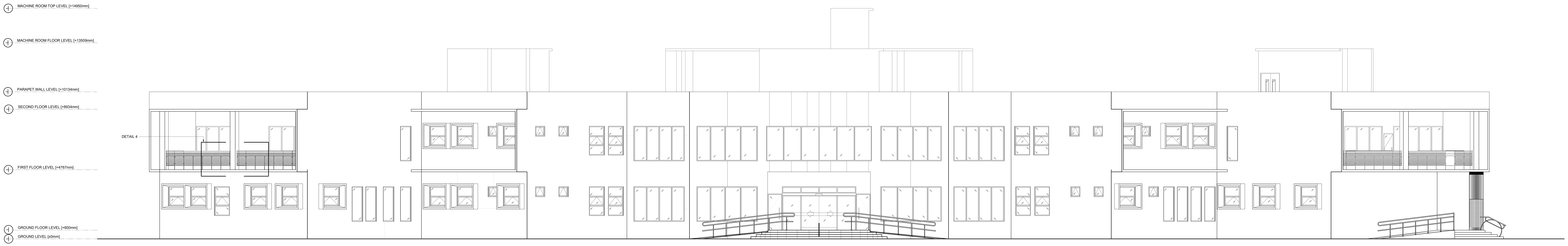

ELEVATION 1
SCALE 1:100

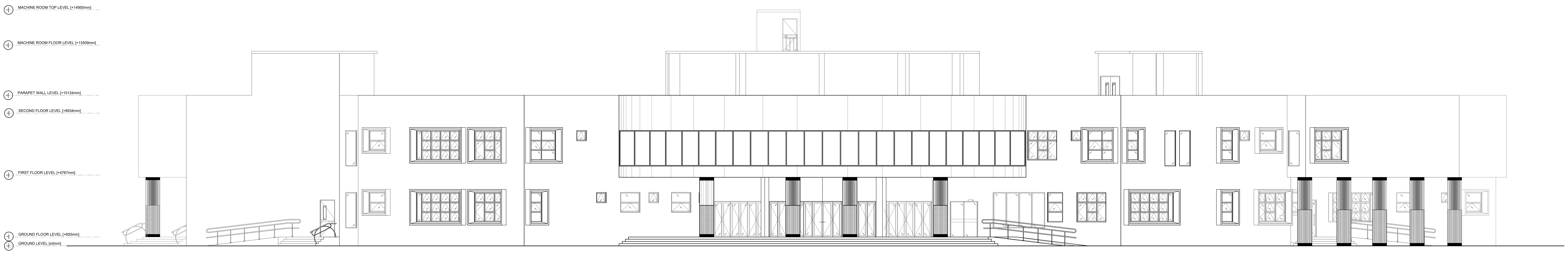

ELEVATION 2
SCALE 1:100

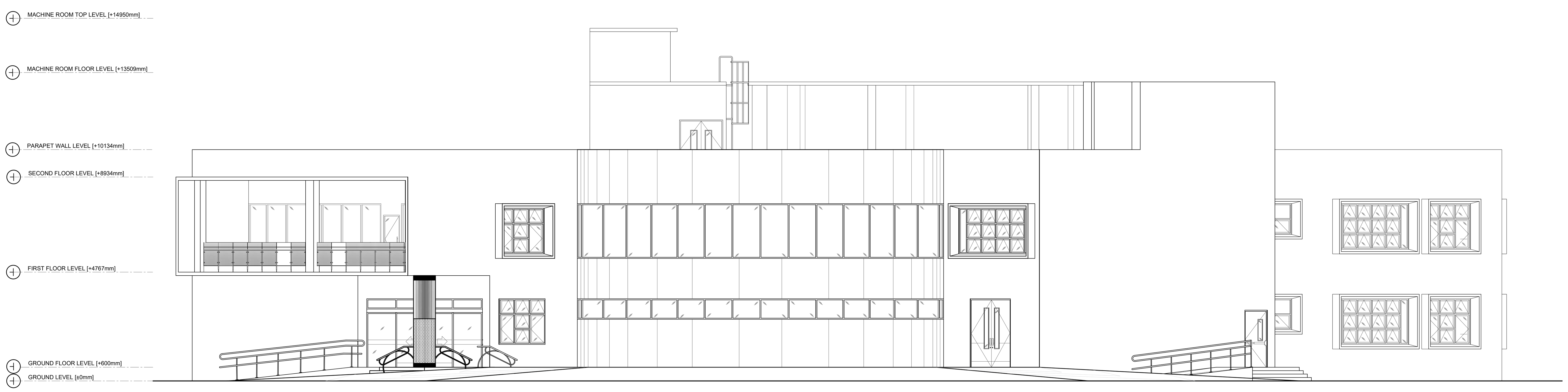

ELEVATION 3
SCALE 1:100

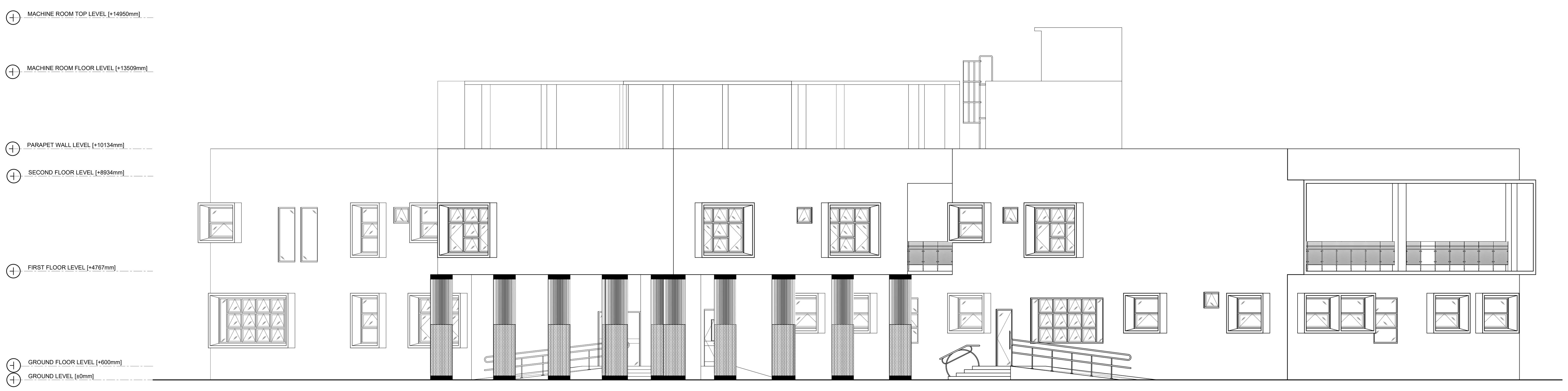

ELEVATION 4
SCALE 1:100

MID HOSPITAL PROJECT
MINISTRY OF HEALTH
AS GIVEN
A2.01

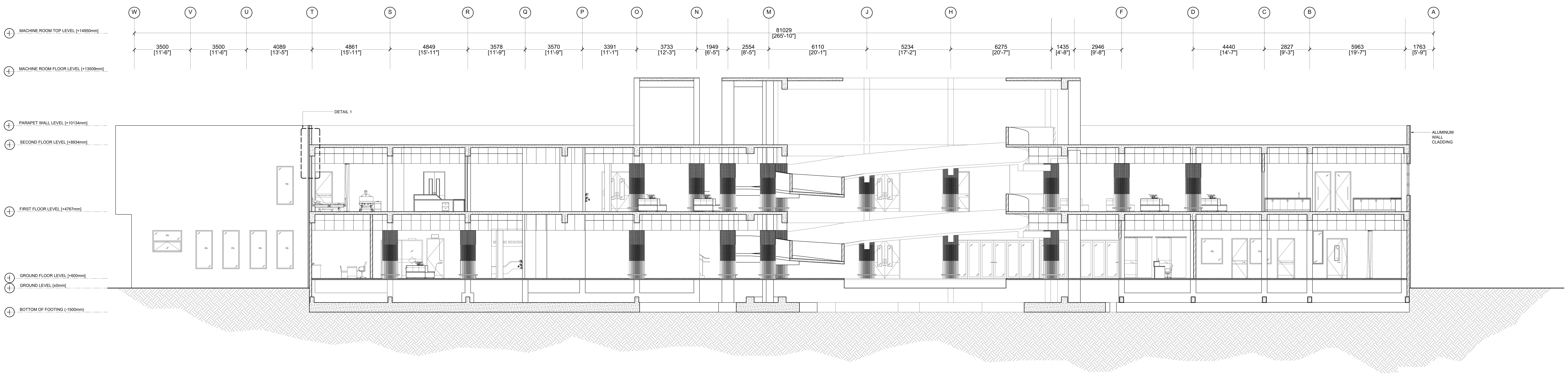

SECTION X

SCALE 1:100

PROJECT TITLE MID HOSPITAL PROJECT	CLIENT & ADDRESS MINISTRY OF HEALTH	DESIGN ARCHITECT: SURVEYING, DESIGN AND DEVELOPMENT SECTION	SHEET IDENTIFICATION NUMBER A3.01
DRAWING TITLE AS GIVEN	PROJECT LOCATION -	ENGINEER: IBRAHIM THOAM STRUCTURAL CHECKER: ABDULLA RAMEEZ	SHEET TITLE 08
		ARCHITECT: AMINATH ZOONA ARCHITECTURAL CHECKER: IRFAN WAHEED PAPER: A0 SCALE: AS GVN	
		DRAWN BY: AMINATH SAMAHA CHECKED BY: HASSAN SHAHULAN DATE: 19-08-2020	

REV	DESCRIPTION	DATE	APPR

M T C C
MALDIVES TRANSPORT & CONTRACTING COMPANY PLC
SURVEY DESIGN AND DEVELOPMENT SECTION
CONSTRUCTION AND PROJECTS MANAGEMENT DEPARTMENT

COPYRIGHT: All plans, sketches, drawings, graphic representations and specifications prepared by the Architect(s) & Engineer(s) are instruments of service. The copyright and ownership of both the design and these instruments of service belong to the Architect(s) & Engineer(s) and may not be used for any other project, or sold, or offered for sale by any party other than the Architect/Engineer unless the Architect/Engineer has given written consent.

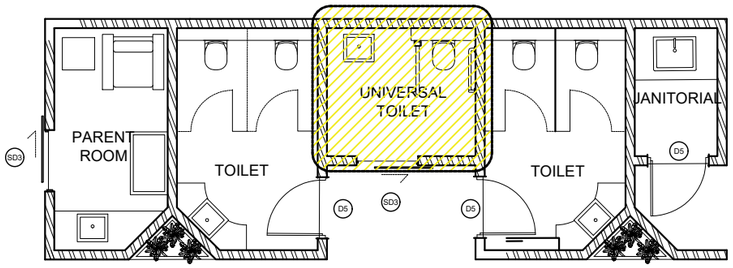

KEY PLAN
SCLAE 1:100

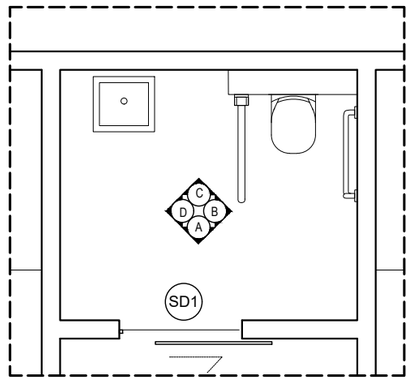

FLOOR PLAN

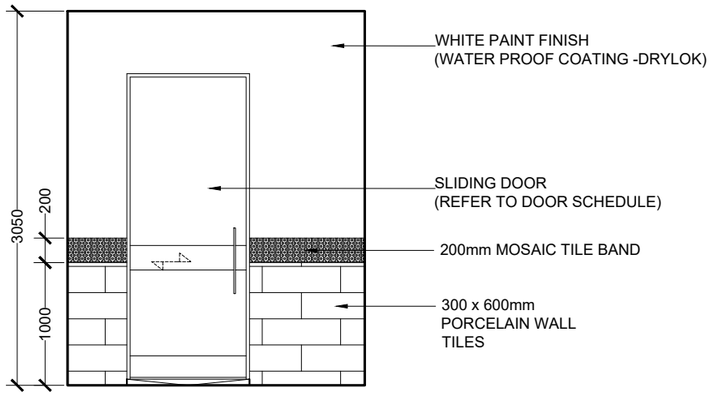

ELEVATION A

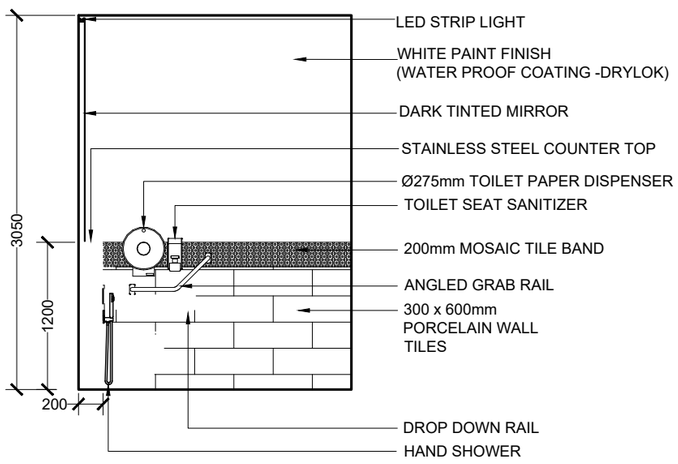

ELEVATION B

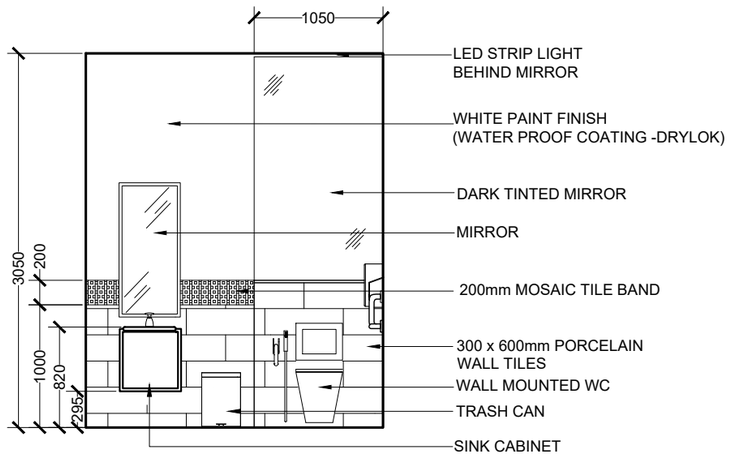

ELEVATION C

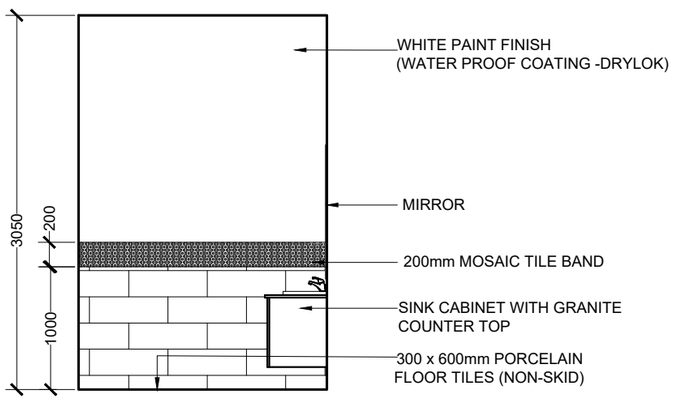

ELEVATION D

PUBLIC UNIVERSAL TOILET
LARGE SCALE VIEWS

SCALE 1:50

0 0.25 0.5 1 2 METERS

M T C C
MALDIVES TRANSPORT & CONTRACTING COMPANY PLC
SURVEY,DESIGN AND DEVELOPMENT SECTION
CONSTRUCTION AND PROJECTS MANGEMENT DEPARTMENT,
MTCC TOWER, BODU THAKURUFAANU MAGU, MALÉ 20181,
REPUBLIC OF MALDIVES,
PHONE: + (960) 332 6822 FAX: + (960) 333 2835
E-MAIL: design.development@mtcc.com.mv

PROJECT TITLE: MID HOSPITAL PROJECT	CLIENT & ADDRESS: MINISTRY OF HEALTH	DESIGN ARCHITECT: SURVEYING, DESIGN AND DEVELOPMENT SECTION			
		ENGINEER: IBRAHIM THOAM	STRUCTURAL CHECKER: ABDULLA RAMEEZ		
DRAWING TITLE: AS GIVEN	PROJECT LOCATION: -	ARCHITECT: AMINATH ZOONA	ARCHITECTURAL CHECKER: IRFAN WAHEED	PAPER: A3	SCALE: AS GVN
		DRAWN BY: AMINATH SAMAHA	CHECKED BY: HASSAN SHAHULAN	DATE: 19-08-2020	

REV	DESCRIPTION	DATE	APPR

SHEET IDENTIFICATION NUMBER
A4.01
SHEET TITLE
09

COPYRIGHT All plans, sketches, drawings, graphic representations and specifications prepared by the Architect(s) & Engineer(s) are instruments of service. The copyright and ownership of both the design and these instruments of service belong to the Architect(s) & Engineer(s) and may not be used for any other project, or sold, or offered for sale by any party other than the Architect/Engineer unless the Architect/Engineer has given written consent. Copies of the documents submitted to the client prepared by the Architect/Engineer maybe used as they were intended; once; and on the same site and project.

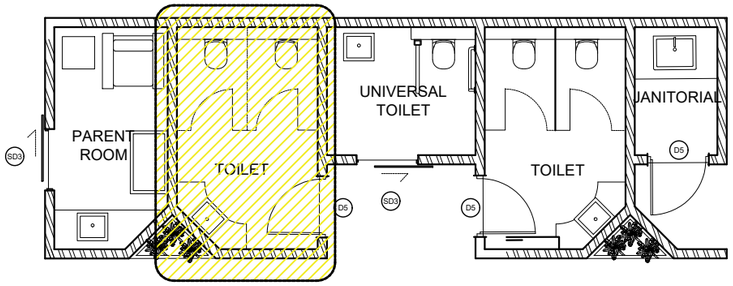

KEY PLAN
SCLAE 1:100

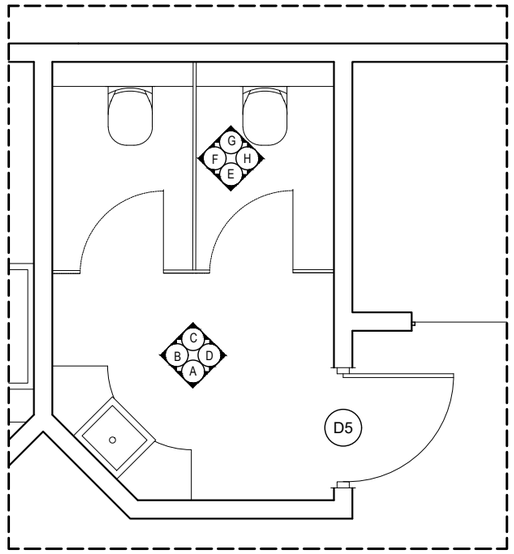

FLOOR PLAN

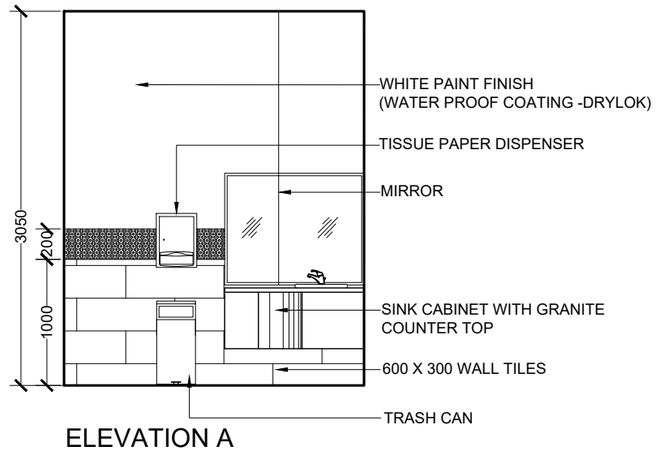

ELEVATION A

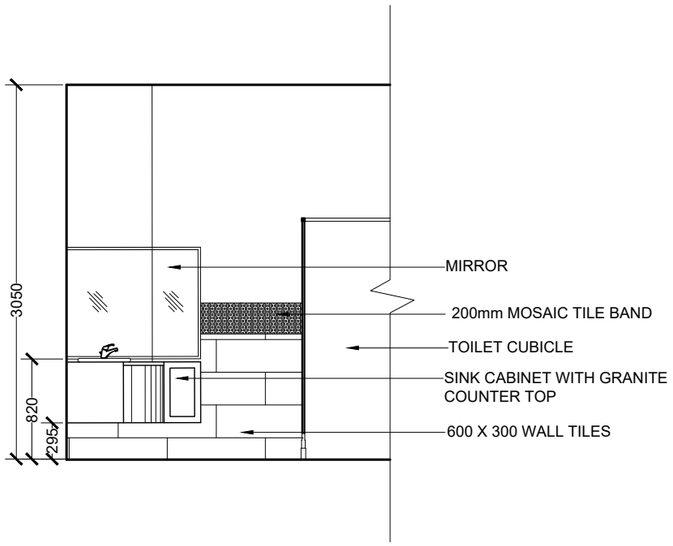

ELEVATION B

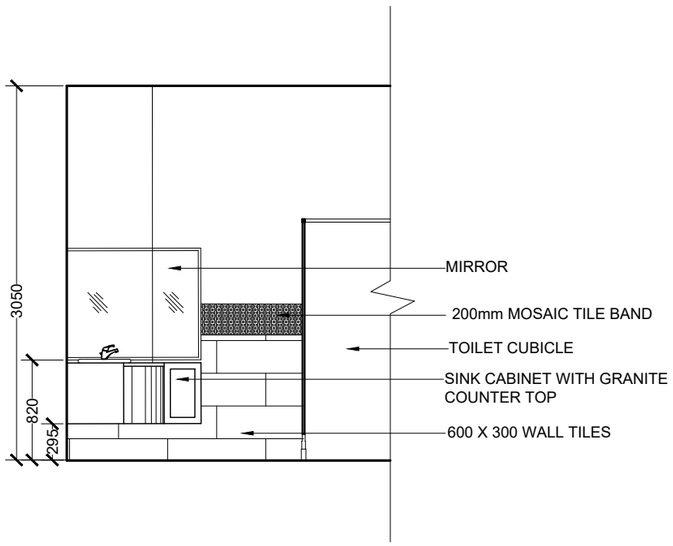

ELEVATION C

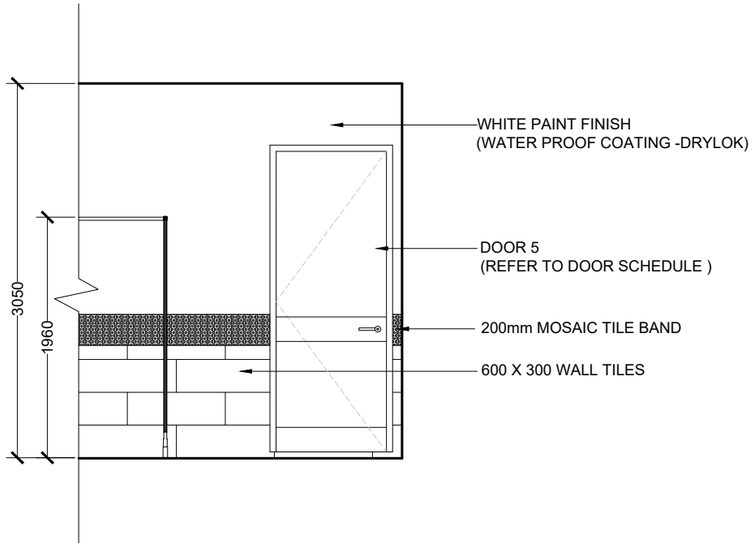

ELEVATION D

TYPICAL PUBLIC TOILETS
LARGE SCALE VIEWS

SCALE 1:50

0 0.25 0.5 1 2 METERS

M T C C
MALDIVES TRANSPORT & CONTRACTING COMPANY PLC
SURVEY,DESIGN AND DEVELOPMENT SECTION
CONSTRUCTION AND PROJECTS MANGEMENT DEPARTMENT,
MTCC TOWER, BODU THAKURUFAANU MAGU, MALE' 20181,
REPUBLIC OF MALDIVES.
PHONE: +(960) 332 6822,FAX: +(960) 333 2835
E-MAIL: design.development@mtcc.com.mv

PROJECT TITLE	MID HOSPITAL PROJECT
DRAWING TITLE	AS GIVEN
CLIENT & ADDRESS	MINISTRY OF HEALTH
PROJECT LOCATION	-
DESIGN ARCHITECT:	SURVEYING, DESIGN AND DEVELOPMENT SECTION
ENGINEER:	IBRAHIM THOAM
STRUCTURAL CHECKER:	ABDULLA RAMEEZ
ARCHITECT:	AMINATH ZOONA
ARCHITECTURAL CHECKER:	IRFAN WAHEED
PAPER	A3
SCALE	AS GVN
DRAWN BY:	AMINATH SAMAHA
CHECKED BY:	HASSAN SHAHULAN
DATE	19-08-2020

REV	DESCRIPTION	DATE	APPR

SHEET IDENTIFICATION NUMBER
A4.02
SHEET TITLE
10

COPYRIGHT All plans, sketches, drawings, graphic representations and specifications prepared by the Architect(s) & Engineer(s) are instruments of service. The copyright and ownership of both the design and these instruments of service belong to the Architect(s) & Engineer(s) and may not be used for any other project, or sold, or offered for sale by any party other than the Architect/Engineer unless the Architect/Engineer has given written consent. Copies of the documents submitted to the client prepared by the Architect/Engineer maybe used as they were intended; once; and on the same site and project.

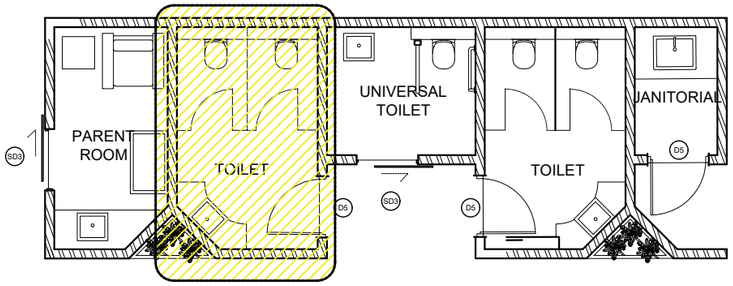

KEY PLAN
SCLAE 1:100

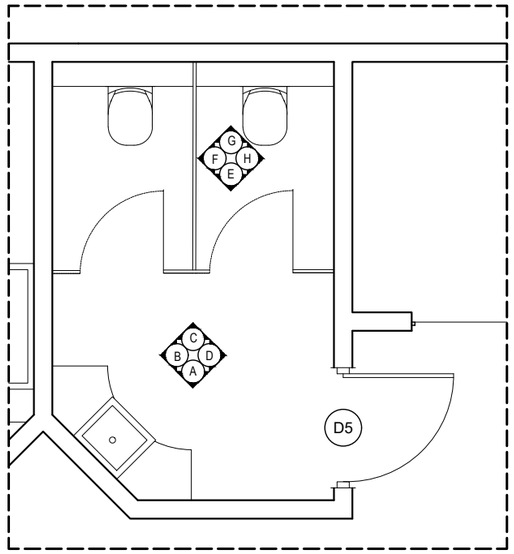

FLOOR PLAN

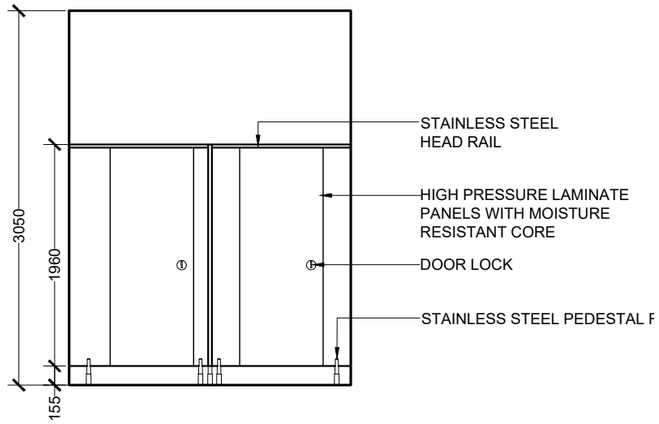

ELEVATION E

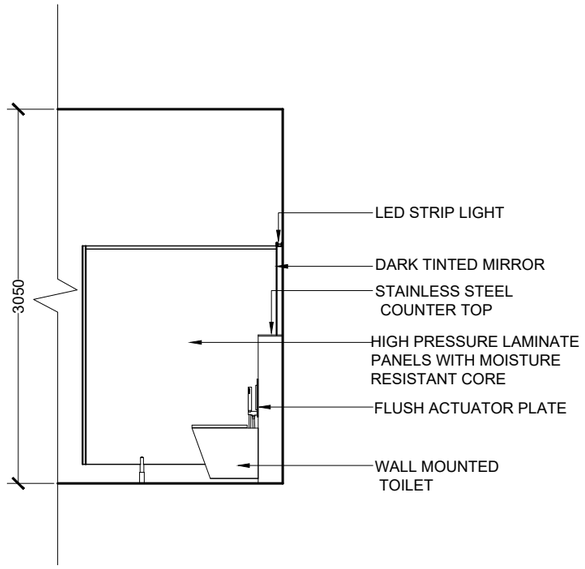

ELEVATION F

ELEVATION G

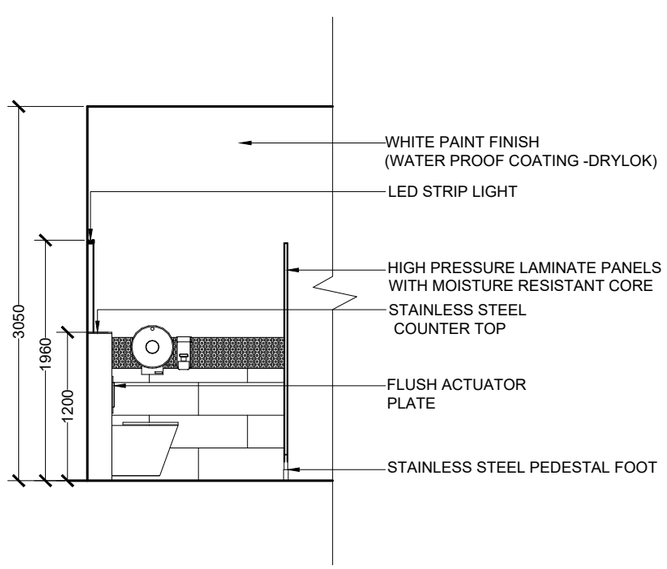

ELEVATION H

TYPICAL PUBLIC TOILETS
LARGE SCALE VIEWS

SCALE 1:50

0 0.25 0.5 1 2 METERS

M T C C
MALDIVES TRANSPORT & CONTRACTING COMPANY PLC
SURVEY,DESIGN AND DEVELOPMENT SECTION
CONSTRUCTION AND PROJECTS MANGEMENT DEPARTMENT,
MTCC TOWER, BODU THAKURUFAANU MAGU, MALE' 20181,
REPUBLIC OF MALDIVES.
PHONE: +(960) 332 6822,FAX: +(960) 333 2835
E-MAIL: design.development@mtcc.com.mv

PROJECT TITLE	MID HOSPITAL PROJECT
DRAWING TITLE	AS GIVEN
CLIENT & ADDRESS	MINISTRY OF HEALTH
PROJECT LOCATION	-
DESIGN ARCHITECT:	SURVEYING, DESIGN AND DEVELOPMENT SECTION
ENGINEER:	IBRAHIM THOAM
STRUCTURAL CHECKER:	ABDULLA RAMEEZ
ARCHITECT:	AMINATH ZOONA
ARCHITECTURAL CHECKER:	IRFAN WAHEED
PAPER	A3
SCALE	AS GVN
DRAWN BY:	AMINATH SAMAHA
CHECKED BY:	HASSAN SHAHULAN
DATE	19-08-2020

REV	DESCRIPTION	DATE	APPR

SHEET IDENTIFICATION NUMBER
A4.03
SHEET TITLE
11

COPYRIGHT All plans, sketches, drawings, graphic representations and specifications prepared by the Architect(s) & Engineer(s) are instruments of service. The copyright and ownership of both the design and these instruments of service belong to the Architect(s) & Engineer(s) and may not be used for any other project, or sold, or offered for sale by any party other than the Architect/Engineer unless the Architect/Engineer has given written consent. Copies of the documents submitted to the client prepared by the Architect/Engineer maybe used as they were intended; once; and on the same site and project.

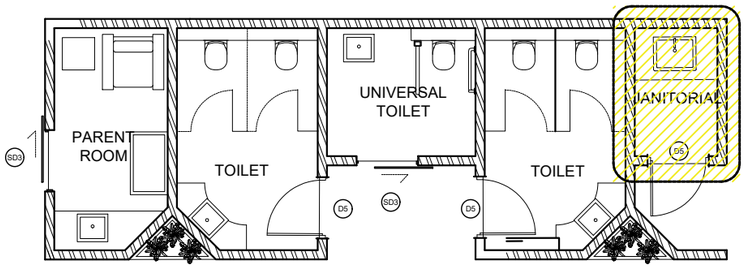

KEY PLAN
SCLAE 1:100

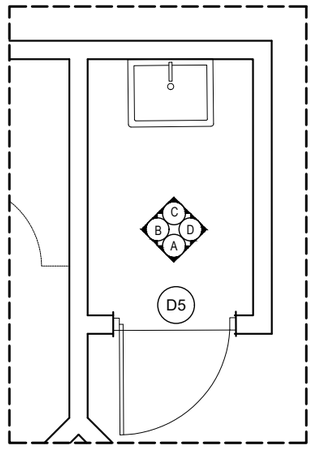

FLOOR PLAN

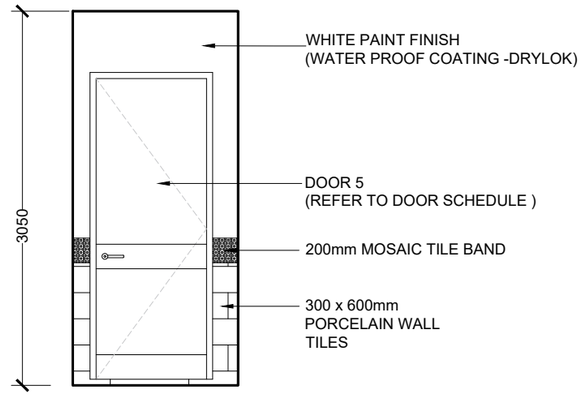

ELEVATION A

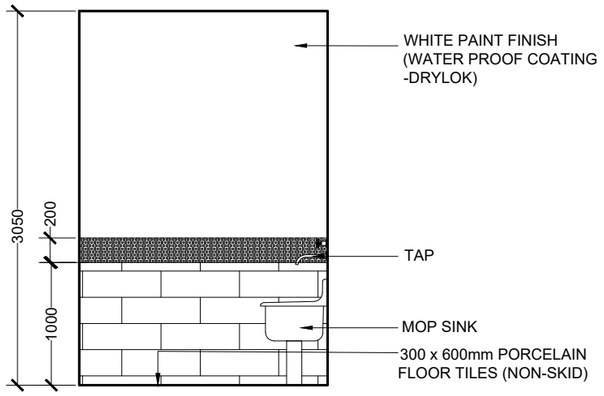

ELEVATION B

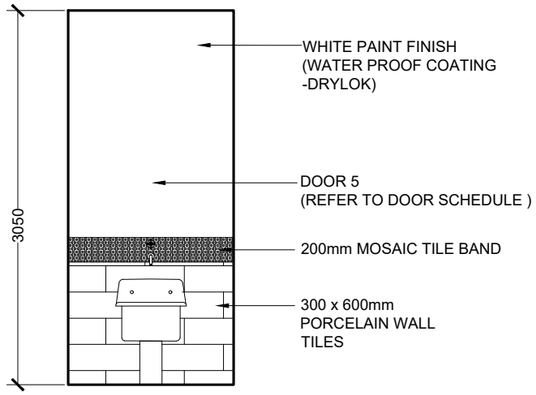

ELEVATION C

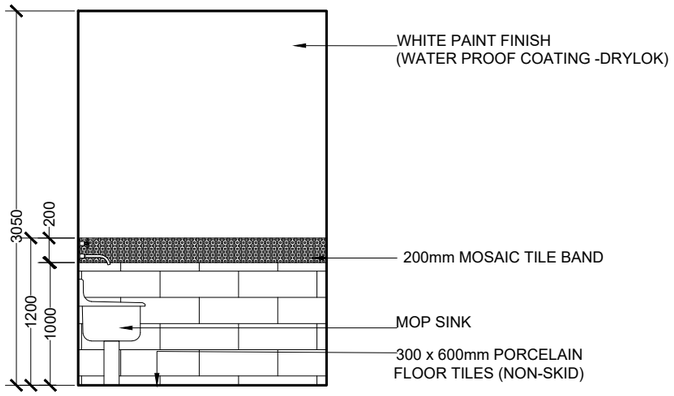

ELEVATION D

JANITORIAL
LARGE SCALE VIEWS

SCALE 1:50

0 0.25 0.5 1 2 METERS

M T C C
MALDIVES TRANSPORT & CONTRACTING COMPANY PLC
SURVEY DESIGN AND DEVELOPMENT SECTION
CONSTRUCTION AND PROJECTS MANGEMENT DEPARTMENT,
MTCC TOWER, BODU THAKURUFAANU MAGU, MALE' 20181,
REPUBLIC OF MALDIVES.
PHONE: +(960) 332 6822,FAX: +(960) 333 2835
E-MAIL: design.development@mtcc.com.mv

PROJECT TITLE	MID HOSPITAL PROJECT
DRAWING TITLE	AS GIVEN
CLIENT & ADDRESS	MINISTRY OF HEALTH
PROJECT LOCATION	-
DESIGN ARCHITECT:	SURVEYING, DESIGN AND DEVELOPMENT SECTION
ENGINEER:	IBRAHIM THOAM
STRUCTURAL CHECKER:	ABDULLA RAMEEZ
ARCHITECT:	AMINATH ZOONA
ARCHITECTURAL CHECKER:	IRFAN WAHEED
PAPER	A3
SCALE	AS GVN
DRAWN BY:	AMINATH SAMAHA
CHECKED BY:	HASSAN SHAHULAN
DATE	19-08-2020

REV	DESCRIPTION	DATE	APPR

SHEET IDENTIFICATION NUMBER
A4.04
SHEET TITLE
12

COPYRIGHT All plans, sketches, drawings, graphic representations and specifications prepared by the Architect(s) & Engineer(s) are instruments of service. The copyright and ownership of both the design and these instruments of service belong to the Architect(s) & Engineer(s) and may not be used for any other project, or sold, or offered for sale by any party other than the Architect/Engineer unless the Architect/Engineer has given written consent. Copies of the documents submitted to the client prepared by the Architect/Engineer maybe used as they were intended; once; and on the same site and project.

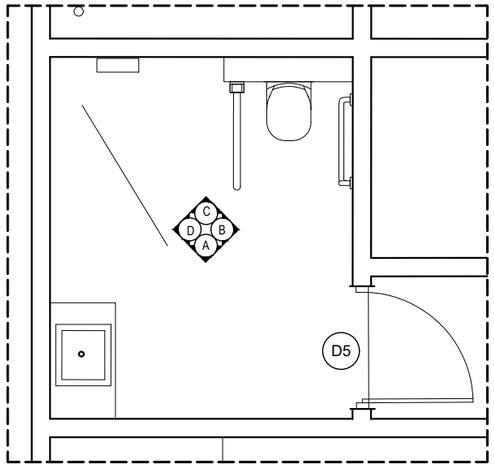

FLOOR PLAN

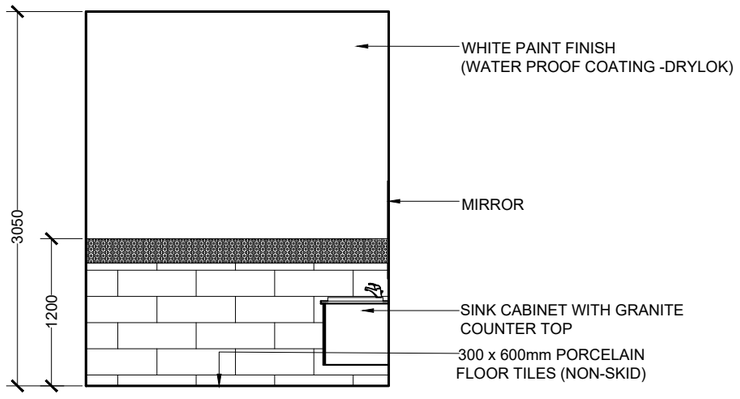

ELEVATION A

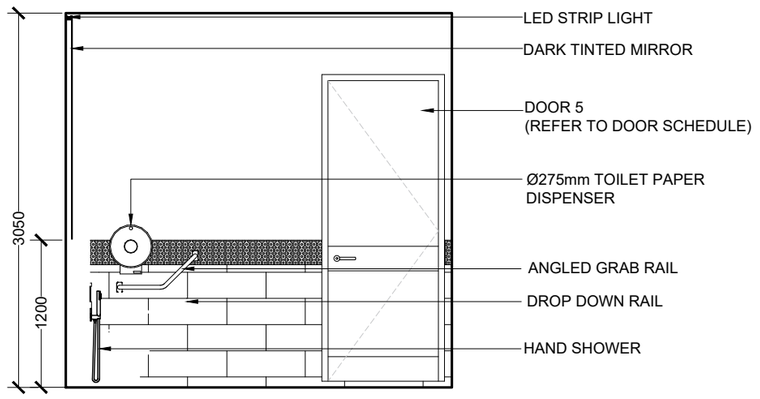

ELEVATION B

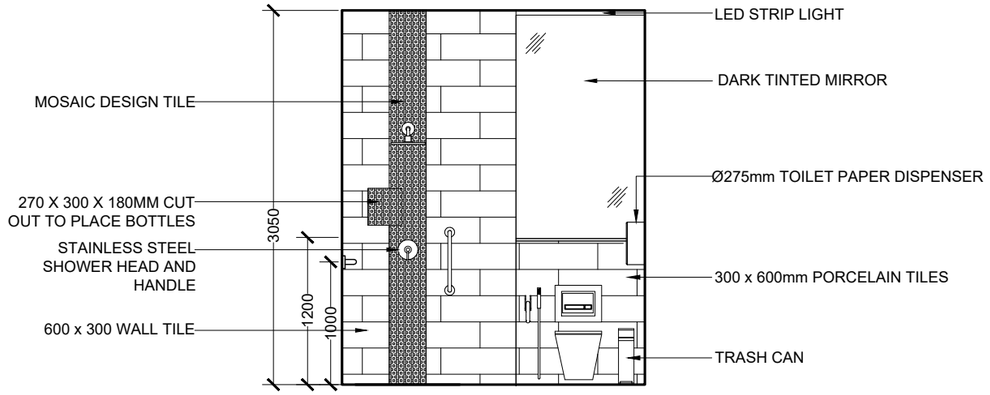

ELEVATION C

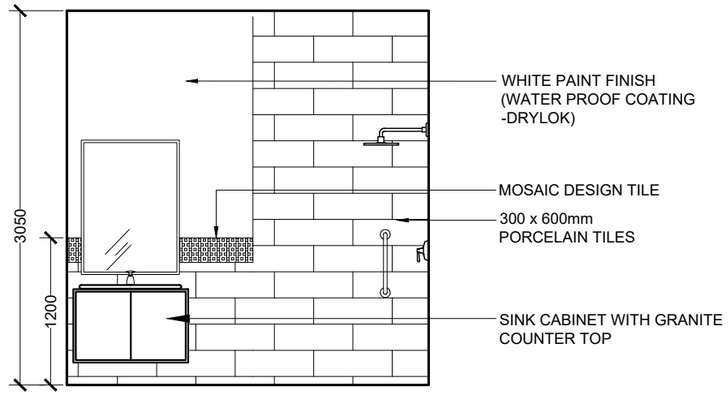

ELEVATION D

INPATIENT TOILET
LARGE SCALE VIEWS

SCALE 1:50

0 0.25 0.5 1 2 METERS

M T C C
MALDIVES TRANSPORT & CONTRACTING COMPANY PLC
SURVEY,DESIGN AND DEVELOPMENT SECTION
CONSTRUCTION AND PROJECTS MANGEMENT DEPARTMENT,
MTCC TOWER, BODU THAKURUFAANU MAGU, MALE 20181,
REPUBLIC OF MALDIVES,
PHONE: +(960) 332 6822 FAX: +(960) 333 2835
E-MAIL: design.development@mtcc.com.mv

PROJECT TITLE: MID HOSPITAL PROJECT	CLIENT & ADDRESS: MINISTRY OF HEALTH	DESIGN ARCHITECT: SURVEYING, DESIGN AND DEVELOPMENT SECTION			
		ENGINEER: IBRAHIM THOAM	STRUCTURAL CHECKER: ABDULLA RAMEEZ		
DRAWING TITLE: AS GIVEN	PROJECT LOCATION: -	ARCHITECT: AMINATH ZOONA	ARCHITECTURAL CHECKER: IRFAN WAHEED	PAPER: A3	SCALE: AS GVN
		DRAWN BY: AMINATH SAMAHA	CHECKED BY: HASSAN SHAHULAN	DATE: 19-08-2020	

REV	DESCRIPTION	DATE	APPR

SHEET IDENTIFICATION NUMBER
A4.05
SHEET TITLE
13

COPYRIGHT All plans, sketches, drawings, graphic representations and specifications prepared by the Architect(s) & Engineer(s) are instruments of service. The copyright and ownership of both the design and these instruments of service belong to the Architect(s) & Engineer(s) and may not be used for any other project, or sold, or offered for sale by any party other than the Architect/Engineer unless the Architect/Engineer has given written consent. Copies of the documents submitted to the client prepared by the Architect/Engineer maybe used as they were intended; once; and on the same site and project.

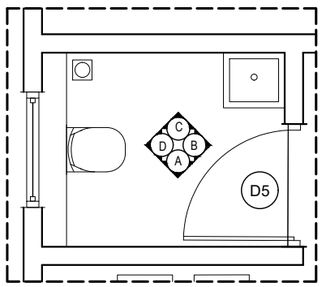

FLOOR PLAN

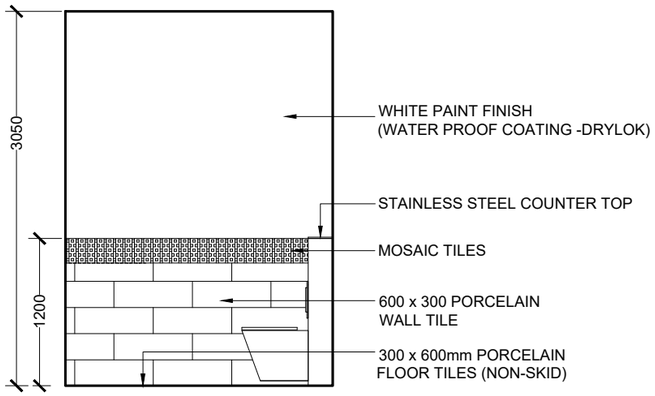

ELEVATION A

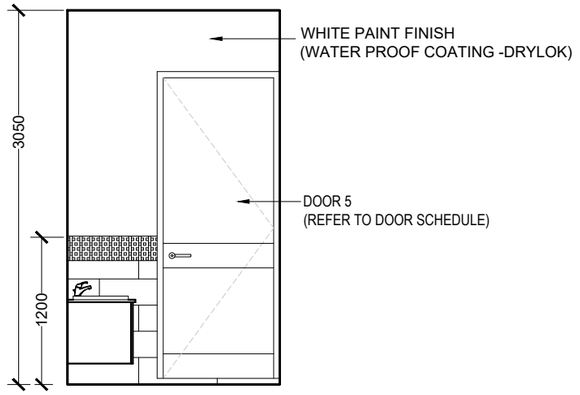

ELEVATION B

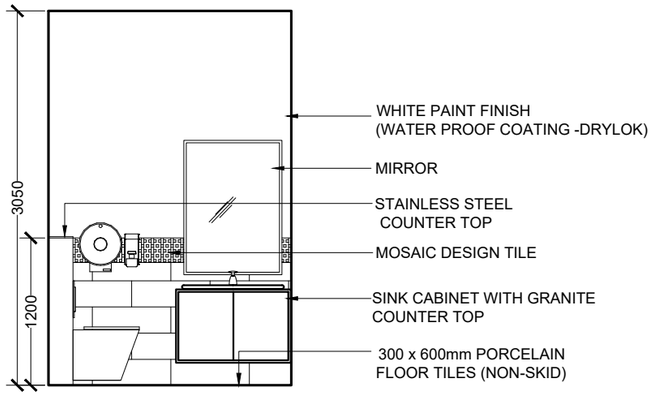

ELEVATION C

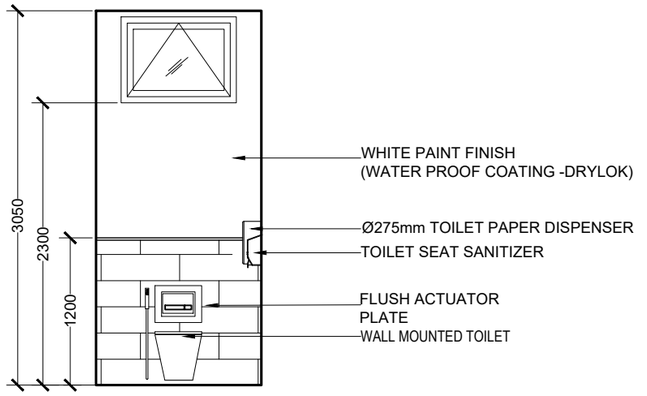

ELEVATION D

GYNECOLOGY OPD TOILET
LARGE SCALE VIEWS

SCALE 1:50

0 0.25 0.5 1 2 METERS

M T C C
MALDIVES TRANSPORT & CONTRACTING COMPANY PLC
SURVEY,DESIGN AND DEVELOPMENT SECTION
CONSTRUCTION AND PROJECTS MANGEMENT DEPARTMENT,
MTCC TOWER, BODU THAKURUFAANU MAGU, MALE 20181,
REPUBLIC OF MALDIVES.
PHONE: + (960) 332 6822,FAX: + (960) 333 2835
E-MAIL: design.development@mtcc.com.mv

PROJECT TITLE	MID HOSPITAL PROJECT
DRAWING TITLE	AS GIVEN
CLIENT & ADDRESS	MINISTRY OF HEALTH
PROJECT LOCATION	-
DESIGN ARCHITECT:	SURVEYING, DESIGN AND DEVELOPMENT SECTION
ENGINEER:	IBRAHIM THOAM
STRUCTURAL CHECKER:	ABDULLA RAMEEZ
ARCHITECT:	AMINATH ZOONA
ARCHITECTURAL CHECKER:	IRFAN WAHEED
PAPER	A3
SCALE	AS GVN
DRAWN BY:	AMINATH SAMAHA
CHECKED BY:	HASSAN SHAHULAN
DATE	19-08-2020

REV	DESCRIPTION	DATE	APPR

SHEET IDENTIFICATION NUMBER
A4.06
SHEET TITLE
14

COPYRIGHT All plans, sketches, drawings, graphic representations and specifications prepared by the Architect(s) & Engineer(s) are instruments of service. The copyright and ownership of both the design and these instruments of service belong to the Architect(s) & Engineer(s) and may not be used for any other project, or sold, or offered for sale by any party other than the Architect/Engineer unless the Architect/Engineer has given written consent. Copies of the documents submitted to the client prepared by the Architect/Engineer maybe used as they were intended; once; and on the same site and project.

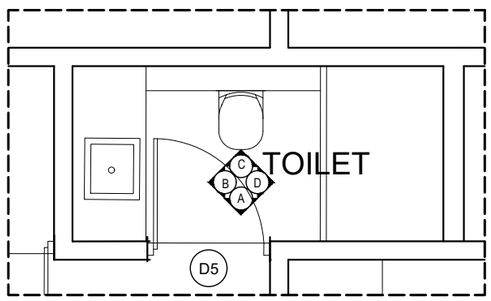

FLOOR PLAN

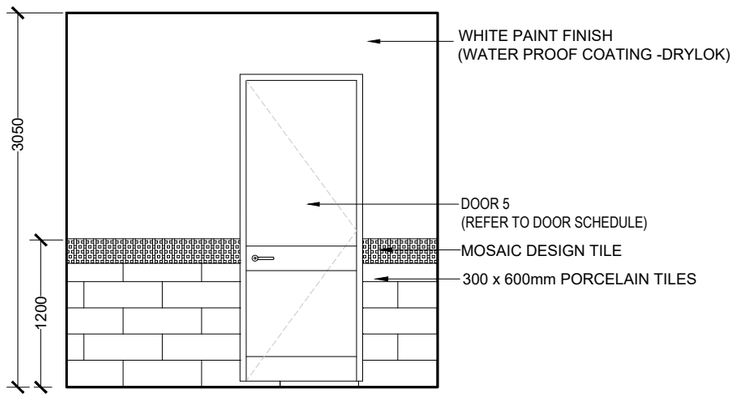

ELEVATION A

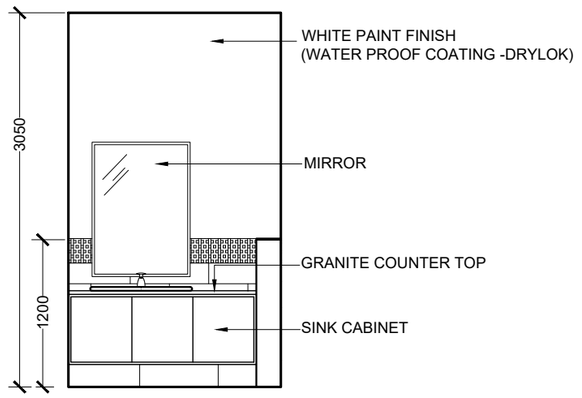

ELEVATION B

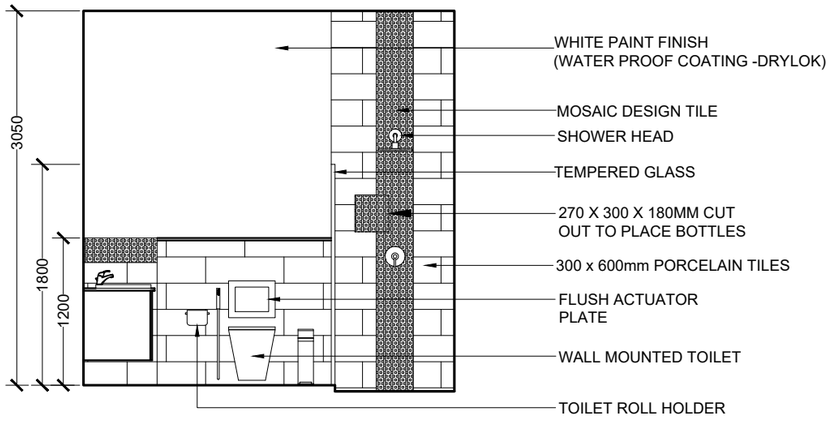

ELEVATION C

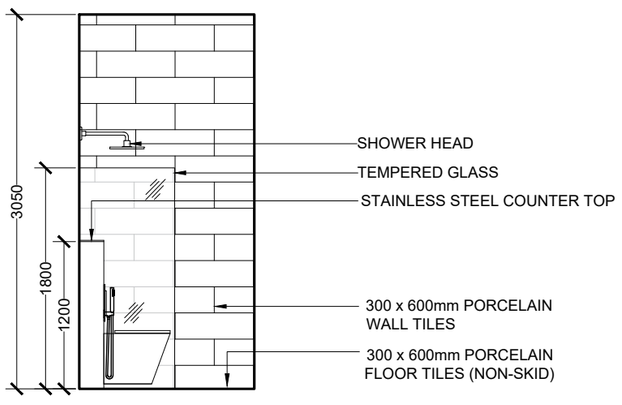

ELEVATION D

MINOR THEATER TOILET
LARGE SCALE VIEWS

SCALE 1:50

0 0.25 0.5 1 2 METERS

M T C C
MALDIVES TRANSPORT & CONTRACTING COMPANY PLC
SURVEY,DESIGN AND DEVELOPMENT SECTION
CONSTRUCTION AND PROJECTS MANGEMENT DEPARTMENT,
MTCC TOWER, BODU THAKURUFAANU MAGU, MALE' 20181,
REPUBLIC OF MALDIVES.
PHONE: +(960) 332 6822,FAX: +(960) 333 2835
E-MAIL: design.development@mtcc.com.mv

PROJECT TITLE	MID HOSPITAL PROJECT
DRAWING TITLE	AS GIVEN
CLIENT & ADDRESS	MINISTRY OF HEALTH
PROJECT LOCATION	-
DESIGN ARCHITECT:	SURVEYING, DESIGN AND DEVELOPMENT SECTION
ENGINEER:	IBRAHIM THOAM
STRUCTURAL CHECKER:	ABDULLA RAMEEZ
ARCHITECT:	AMINATH ZOONA
ARCHITECTURAL CHECKER:	IRFAN WAHEED
PAPER	A3
SCALE	AS GVN
DRAWN BY:	AMINATH SAMAHA
CHECKED BY:	HASSAN SHAHULAN
DATE	19-08-2020

REV	DESCRIPTION	DATE	APPR

SHEET IDENTIFICATION NUMBER

A4.07

SHEET TITLE

15

COPYRIGHT All plans, sketches, drawings, graphic representations and specifications prepared by the Architect(s) & Engineer(s) are instruments of service. The copyright and ownership of both the design and these instruments of service belong to the Architect(s) & Engineer(s) and may not be used for any other project, or sold, or offered for sale by any party other than the Architect/Engineer unless the Architect/Engineer has given written consent. Copies of the documents submitted to the client prepared by the Architect/Engineer maybe used as they were intended; once; and on the same site and project.

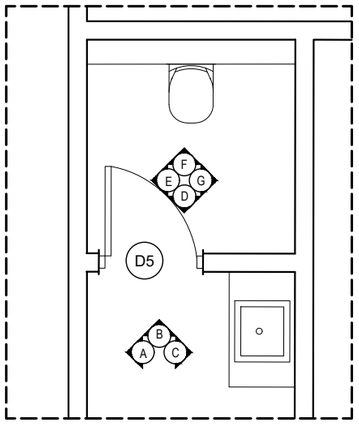

FLOOR PLAN

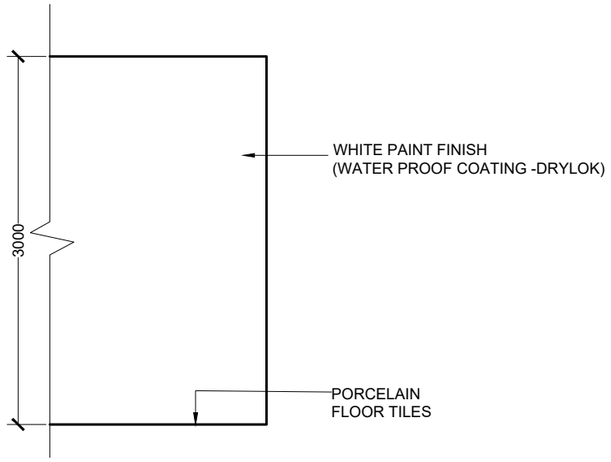

ELEVATION A

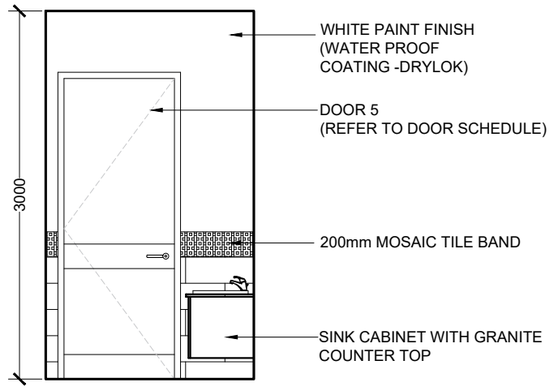

ELEVATION B

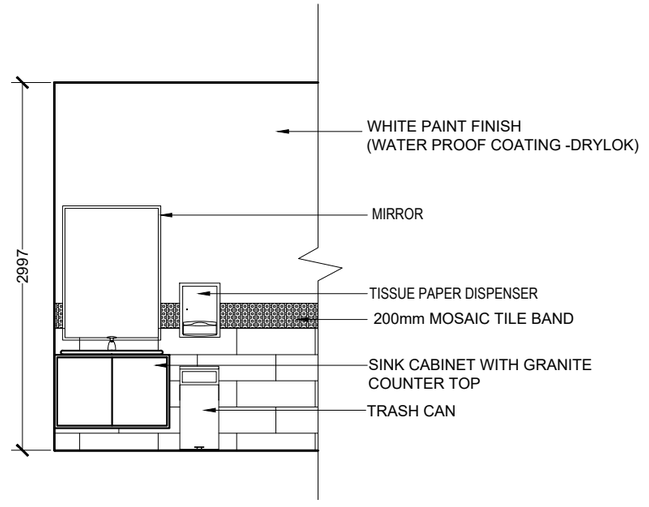

ELEVATION C

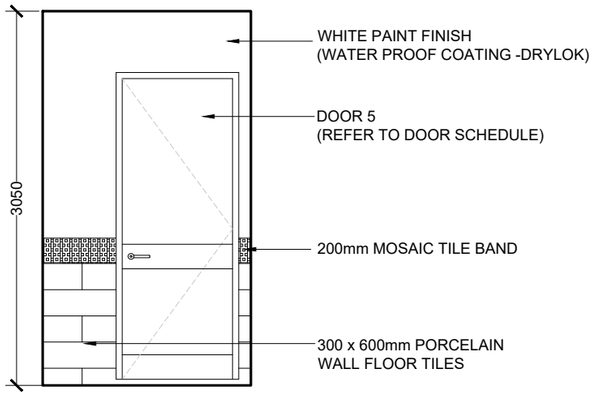

ELEVATION D

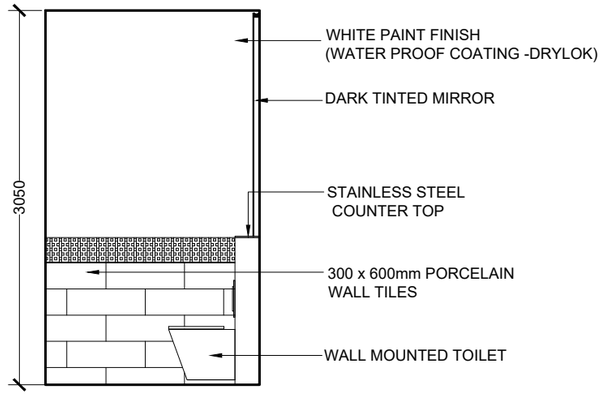

ELEVATION D

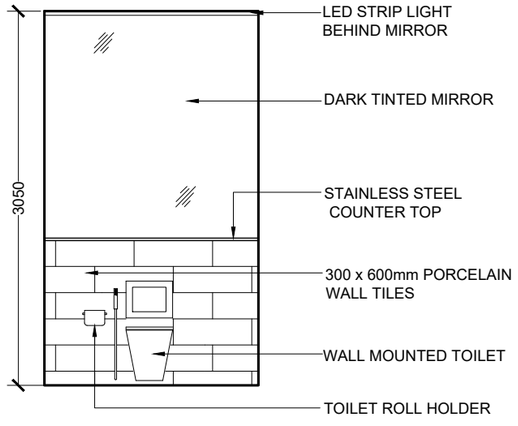

ELEVATION E

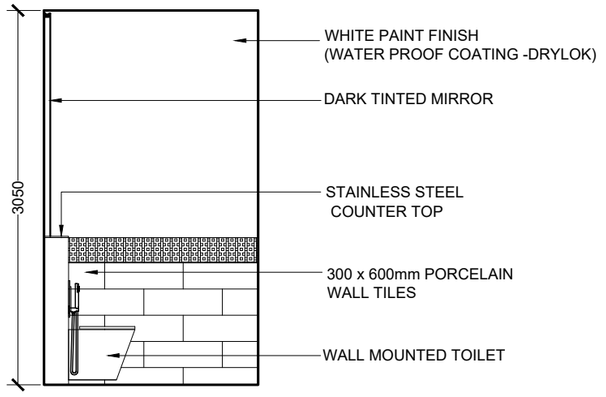

ELEVATION E

STAFF TOILET TYPE 1
LARGE SCALE VIEWS

SCALE 1:50

0 0.25 0.5 1 2 METERS

M T C C
MALDIVES TRANSPORT & CONTRACTING COMPANY PLC
SURVEY,DESIGN AND DEVELOPMENT SECTION
CONSTRUCTION AND PROJECTS MANGEMENT DEPARTMENT,
MTCC TOWER, BODU THAKURUFAANU MAGU, MALE 20181,
REPUBLIC OF MALDIVES.
PHONE: + (960) 332 6822,FAX: + (960) 333 2835
E-MAIL: design.development@mtcc.com.mv

PROJECT TITLE	MID HOSPITAL PROJECT
DRAWING TITLE	AS GIVEN
CLIENT & ADDRESS	MINISTRY OF HEALTH
PROJECT LOCATION	-
DESIGN ARCHITECT:	SURVEYING, DESIGN AND DEVELOPMENT SECTION
ENGINEER:	IBRAHIM THOAM
STRUCTURAL CHECKER:	ABDULLA RAMEEZ
ARCHITECT:	AMINATH ZOONA
ARCHITECTURAL CHECKER:	IRFAN WAHEED
PAPER	A3
SCALE	AS GVN
DRAWN BY:	AMINATH SAMAHA
CHECKED BY:	HASSAN SHAHULAN
DATE	19-08-2020

REV	DESCRIPTION	DATE	APPR

SHEET IDENTIFICATION NUMBER

A4.08

SHEET TITLE

16

COPYRIGHT All plans, sketches, drawings, graphic representations and specifications prepared by the Architect(s) & Engineer(s) are instruments of service. The copyright and ownership of both the design and these instruments of service belong to the Architect(s) & Engineer(s) and may not be used for any other project, or sold, or offered for sale by any party other than the Architect/Engineer unless the Architect/Engineer has given written consent. Copies of the documents submitted to the client prepared by the Architect/Engineer maybe used as they were intended; once; and on the same site and project.

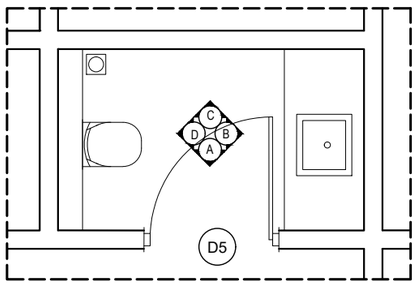

FLOOR PLAN

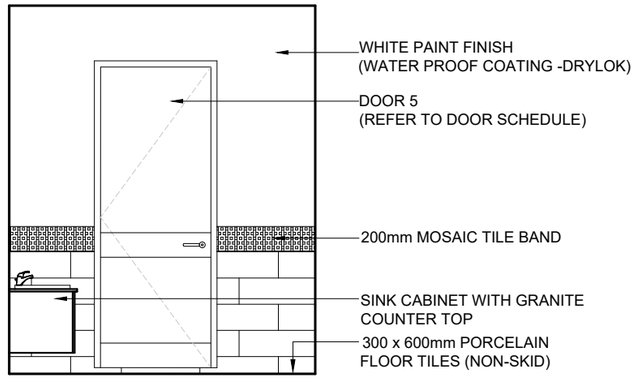

ELEVATION A

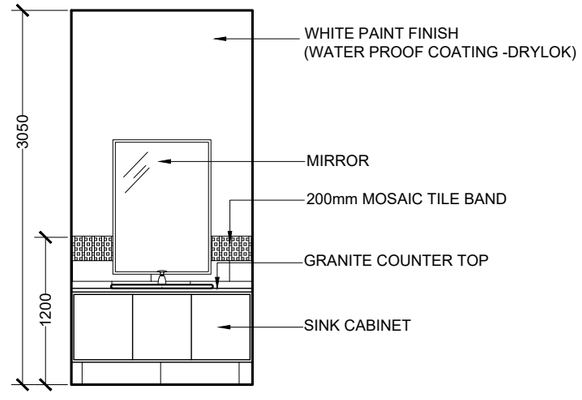

ELEVATION B

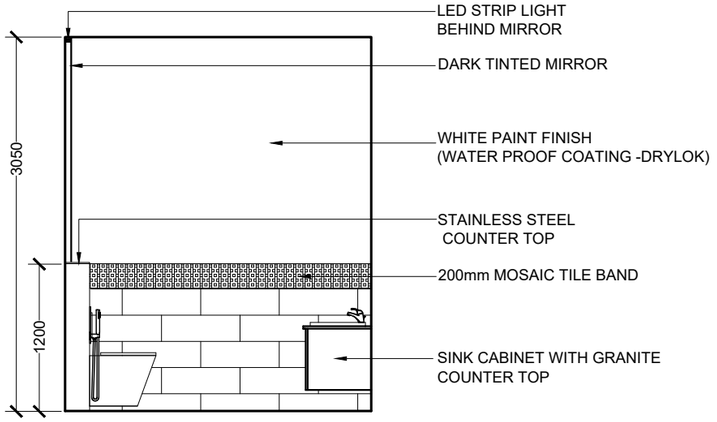

ELEVATION C

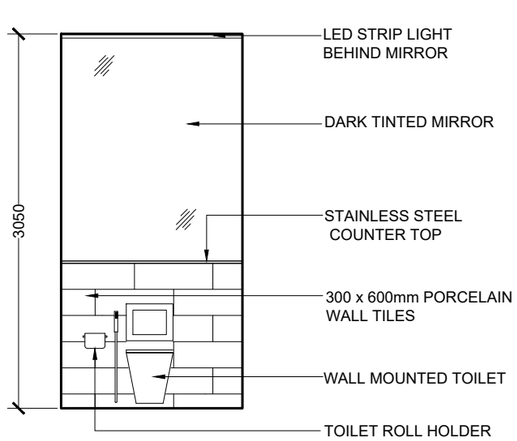

ELEVATION D

STAFF TOILET TYPE 2
LARGE SCALE VIEWS

SCALE 1:50

0 0.25 0.5 1 2 METERS

M T C C
MALDIVES TRANSPORT & CONTRACTING COMPANY PLC
SURVEY,DESIGN AND DEVELOPMENT SECTION
CONSTRUCTION AND PROJECTS MANGEMENT DEPARTMENT,
MTCC TOWER, BODU THAKURUFAANU MAGU, MALE' 20181,
REPUBLIC OF MALDIVES.
PHONE: +(960) 332 6822,FAX: +(960) 333 2835
E-MAIL: design.development@mtcc.com.mv

PROJECT TITLE	MID HOSPITAL PROJECT
DRAWING TITLE	AS GIVEN
CLIENT & ADDRESS	MINISTRY OF HEALTH
PROJECT LOCATION	-
DESIGN ARCHITECT:	SURVEYING, DESIGN AND DEVELOPMENT SECTION
ENGINEER:	IBRAHIM THOAM
STRUCTURAL CHECKER:	ABDULLA RAMEEZ
ARCHITECT:	AMINATH ZOONA
ARCHITECTURAL CHECKER:	IRFAN WAHEED
PAPER	A3
SCALE	AS GVN
DRAWN BY:	AMINATH SAMAHA
CHECKED BY:	HASSAN SHAHULAN
DATE	19-08-2020

REV	DESCRIPTION	DATE	APPR

SHEET IDENTIFICATION NUMBER

A4.09

SHEET TITLE

17

COPYRIGHT All plans, sketches, drawings, graphic representations and specifications prepared by the Architect(s) & Engineer(s) are instruments of service. The copyright and ownership of both the design and these instruments of service belong to the Architect(s) & Engineer(s) and may not be used for any other project, or sold, or offered for sale by any party other than the Architect/Engineer unless the Architect/Engineer has given written consent. Copies of the documents submitted to the client prepared by the Architect/Engineer maybe used as they were intended; once; and on the same site and project.

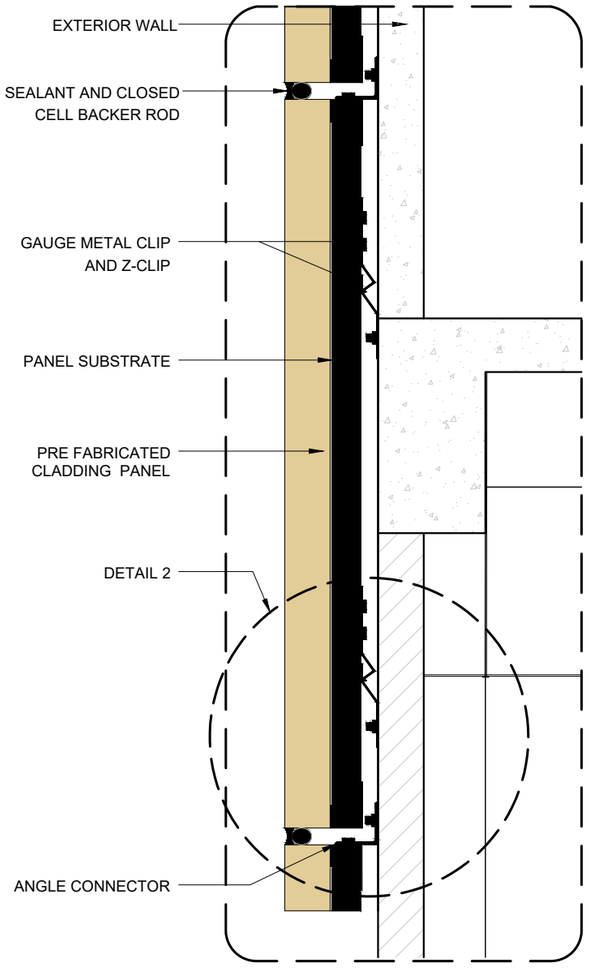

WALL CLADDING DETAIL
DETAIL 1

SCALE 1:20

0 0.1 0.2 0.4 0.8 METERS

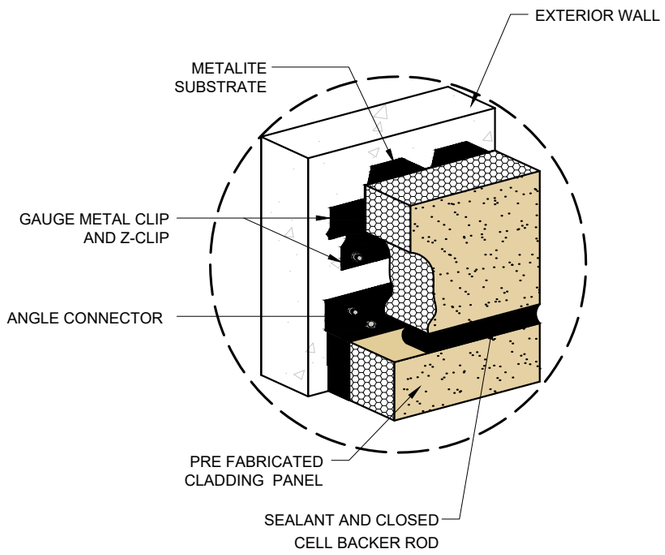

WALL CLADDING DETAIL
DETAIL 2

SCALE 1:20

0 0.1 0.2 0.4 0.8 METERS

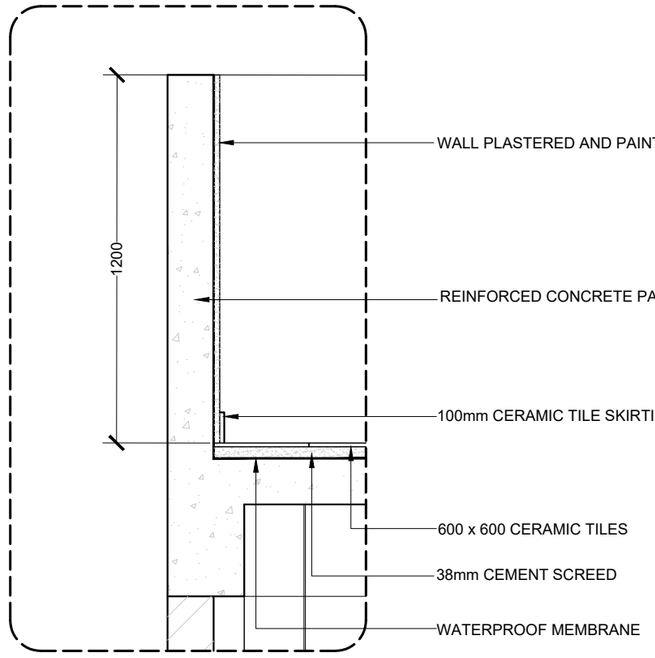

PARAPET WALL
DETAIL 3

SCALE 1:20

0 0.1 0.2 0.4 0.8 METERS

M T C C
MALDIVES TRANSPORT & CONTRACTING COMPANY PLC

SURVEY,DESIGN AND DEVELOPMENT SECTION
CONSTRUCTION AND PROJECTS MANGEMENT DEPARTMENT,
MTCC TOWER, BODU THAKURUFAANU MAGU, MALE' 20181,
REPUBLIC OF MALDIVES.
PHONE:+(960) 332 6822,FAX: +(960) 333 2835
E-MAIL: design.development@mtcc.com.mv

PROJECT TITLE	MID HOSPITAL PROJECT
DRAWING TITLE	AS GIVEN
CLIENT & ADDRESS	MINISTRY OF HEALTH
PROJECT LOCATION	-
DESIGN ARCHITECT:	SURVEYING, DESIGN AND DEVELOPMENT SECTION
ENGINEER:	IBRAHIM THOAM
STRUCTURAL CHECKER:	ABDULLA RAMEEZ
ARCHITECT:	AMINATH ZOONA
ARCHITECTURAL CHECKER:	IRFAN WAHEED
PAPER	A3
SCALE	AS GVN
DRAWN BY:	AMINATH SAMAHA
CHECKED BY:	HASSAN SHAHULAN
DATE	19-08-2020

REV	DESCRIPTION	DATE	APPR

SHEET IDENTIFICATION NUMBER

A5.01

SHEET TITLE

18

COPYRIGHT All plans, sketches, drawings, graphic representations and specifications prepared by the Architect(s) & Engineer(s) are instruments of service. The copyright and ownership of both the design and these instruments of service belong to the Architect(s) & Engineer(s) and may not be used for any other project, or sold, or offered for sale by any party other than the Architect/Engineer unless the Architect/Engineer has given written consent. Copies of the documents submitted to the client prepared by the Architect/Engineer maybe used as they were intended; once; and on the same site and project.

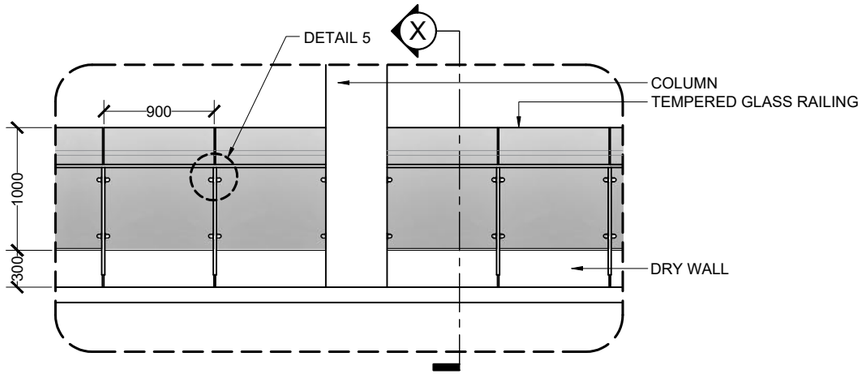

RAILING DETAIL
DETAIL 4

SCALE 1:50

0 0.25 0.5 1 2 METERS

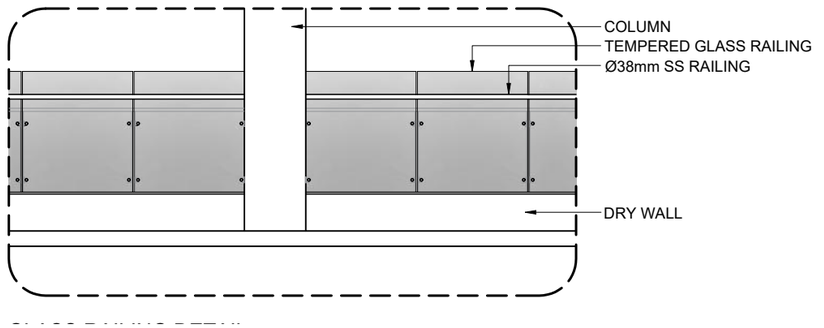

RAILING BACK ELEVATION

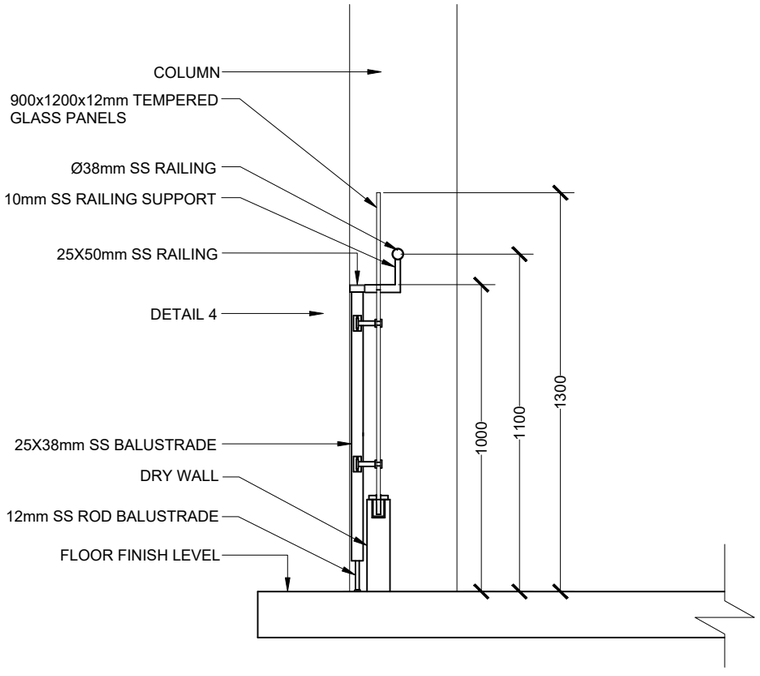

TYPICAL GLASS RAILING SECTION

SCALE 1:20

0 0.1 0.2 0.4 0.8 METERS

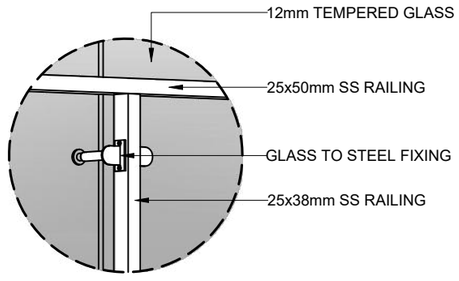

DETAIL 5
[GLASS RAILING FRONT VIEW]

SCALE 1:10

0 0.05 0.1 0.2 0.4 METERS

DETAIL 6
[GLASS RAILING BACK VIEW]

SCALE 1:10

0 0.05 0.1 0.2 0.4 METERS

RAILING DETAIL

M T C C
MALDIVES TRANSPORT & CONTRACTING COMPANY PLC
SURVEY,DESIGN AND DEVELOPMENT SECTION
CONSTRUCTION AND PROJECTS MANGEMENT DEPARTMENT,
MTCC TOWER, BODU THAKURUFAANU MAGU, MALE' 20181,
REPUBLIC OF MALDIVES.
PHONE: +(960) 332 6822,FAX: +(960) 333 2835
E-MAIL: design.development@mtcc.com.mv

PROJECT TITLE	MID HOSPITAL PROJECT
DRAWING TITLE	AS GIVEN
CLIENT & ADDRESS	MINISTRY OF HEALTH
PROJECT LOCATION	-
DESIGN ARCHITECT:	SURVEYING, DESIGN AND DEVELOPMENT SECTION
ENGINEER:	IBRAHIM THOAM
STRUCTURAL CHECKER:	ABDULLA RAMEEZ
ARCHITECT:	AMINATH ZOONA
ARCHITECTURAL CHECKER:	IRFAN WAHEED
PAPER	A3
SCALE	AS GVN
DRAWN BY:	AMINATH SAMAHA
CHECKED BY:	HASSAN SHAHULAN
DATE	19-08-2020

REV	DESCRIPTION	DATE	APPR

SHEET IDENTIFICATION NUMBER
A5.02
SHEET TITLE
19

COPYRIGHT All plans, sketches, drawings, graphic representations and specifications prepared by the Architect(s) & Engineer(s) are instruments of service. The copyright and ownership of both the design and these instruments of service belong to the Architect(s) & Engineer(s) and may not be used for any other project, or sold, or offered for sale by any party other than the Architect/Engineer unless the Architect/Engineer has given written consent. Copies of the documents submitted to the client prepared by the Architect/Engineer maybe used as they were intended, once, and on the same site and project.

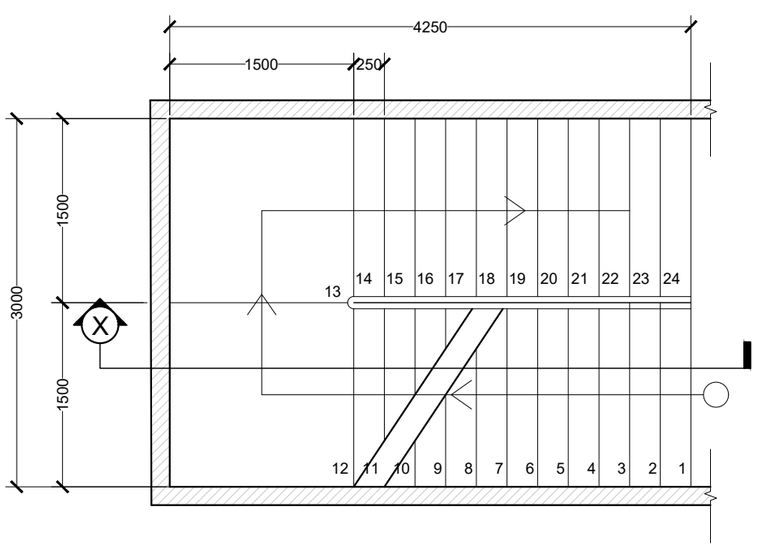

STAIR PLAN VIEW

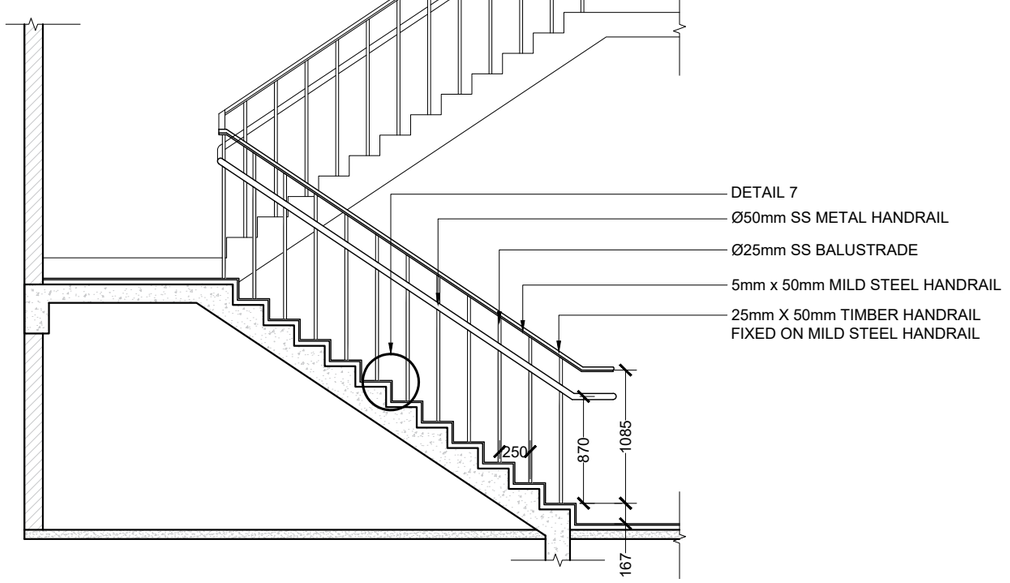

STAIR SECTION VIEW

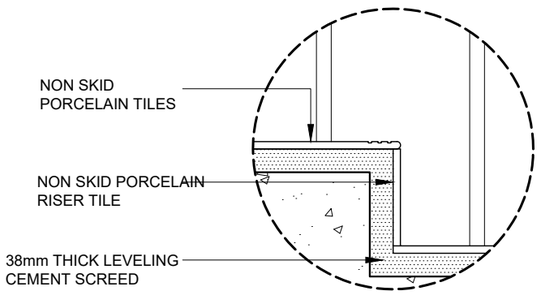

DETAIL 7
[STAIR DETAIL]

SCALE 1:10

0 0.05 0.1 0.2 0.4 METERS

STAIR DETAIL

SCALE 1:50

0 0.25 0.5 1 2 METERS

M T C C
MALDIVES TRANSPORT & CONTRACTING COMPANY PLC
SURVEY,DESIGN AND DEVELOPMENT SECTION
CONSTRUCTION AND PROJECTS MANGEMENT DEPARTMENT,
MTCC TOWER, BODU THAKURUFAANU MAGU, MALE' 20181,
REPUBLIC OF MALDIVES.
PHONE: + (960) 332 6822,FAX: + (960) 333 2835
E-MAIL: design.development@mtcc.com.mv

PROJECT TITLE	MID HOSPITAL PROJECT
DRAWING TITLE	AS GIVEN
CLIENT & ADDRESS	MINISTRY OF HEALTH
PROJECT LOCATION	-
DESIGN ARCHITECT:	SURVEYING, DESIGN AND DEVELOPMENT SECTION
ENGINEER:	IBRAHIM THOAM
STRUCTURAL CHECKER:	ABDULLA RAMEEZ
ARCHITECT:	AMINATH ZOONA
ARCHITECTURAL CHECKER:	IRFAN WAHEED
PAPER	A3
SCALE	AS GVN
DRAWN BY:	AMINATH SAMAHA
CHECKED BY:	HASSAN SHAHULAN
DATE	19-08-2020

REV	DESCRIPTION	DATE	APPR

SHEET IDENTIFICATION NUMBER

A5.03

SHEET TITLE

20

COPYRIGHT All plans, sketches, drawings, graphic representations and specifications prepared by the Architect(s) & Engineer(s) are instruments of service. The copyright and ownership of both the design and these instruments of service belong to the Architect(s) & Engineer(s) and may not be used for any other project, or sold, or offered for sale by any party other than the Architect/Engineer unless the Architect/Engineer has given written consent. Copies of the documents submitted to the client prepared by the Architect/Engineer maybe used as they were intended; once; and on the same site and project.

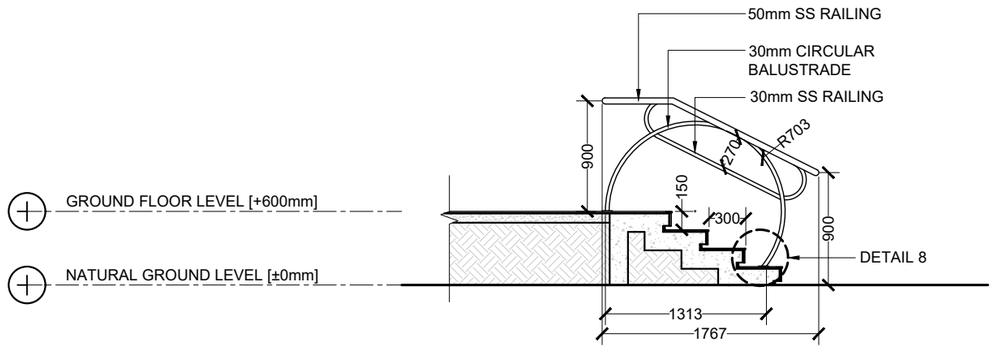

TYPICAL STAIR FROM GROUND TO GROUND FLOOR SECTION

SCALE 1:50

0 0.25 0.5 1 2 METERS

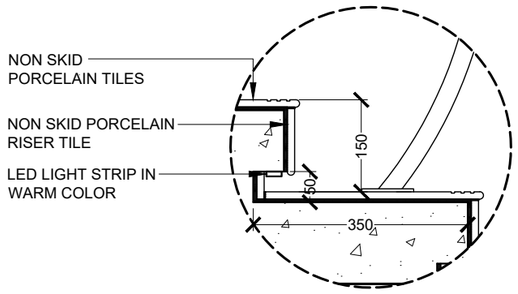

DETAIL 8

SCALE 1:50

0 0.25 0.5 1 2 METERS

M T C C
MALDIVES TRANSPORT & CONTRACTING COMPANY PLC
SURVEY,DESIGN AND DEVELOPMENT SECTION
CONSTRUCTION AND PROJECTS MANGEMENT DEPARTMENT,
MTCC TOWER, BODU THAKURUFAANU MAGU, MALE 20181,
REPUBLIC OF MALDIVES,
PHONE: +(960) 332 6822 FAX: +(960) 333 2835
E-MAIL: design.development@mtcc.com.mv

PROJECT TITLE: MID HOSPITAL PROJECT	CLIENT & ADDRESS: MINISTRY OF HEALTH	DESIGN ARCHITECT: SURVEYING, DESIGN AND DEVELOPMENT SECTION		
		ENGINEER: IBRAHIM THOAM	STRUCTURAL CHECKER: ABDULLA RAMEEZ	
DRAWING TITLE: AS GIVEN	PROJECT LOCATION: -	ARCHITECT: AMINATH ZOONA	ARCHITECTURAL CHECKER: IRFAN WAHEED	PAPER: A3 / SCALE: AS GVN
		DRAWN BY: AMINATH SAMAHA	CHECKED BY: HASSAN SHAHULAN	DATE: 19-08-2020

REV	DESCRIPTION	DATE	APPR

SHEET IDENTIFICATION NUMBER

A5.04

SHEET TITLE

21

COPYRIGHT All plans, sketches, drawings, graphic representations and specifications prepared by the Architect(s) & Engineer(s) are instruments of service. The copyright and ownership of both the design and these instruments of service belong to the Architect(s) & Engineer(s) and may not be used for any other project, or sold, or offered for sale by any party other than the Architect/Engineer unless the Architect/Engineer has given written consent. Copies of the documents submitted to the client prepared by the Architect/Engineer maybe used as they were intended; once; and on the same site and project.

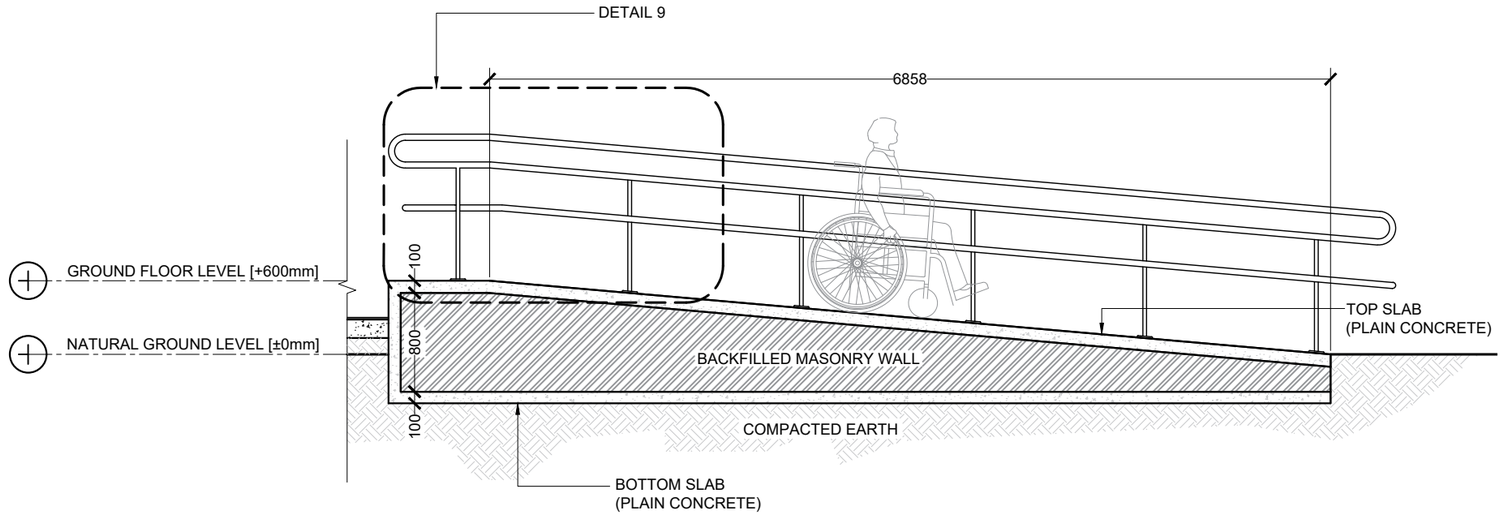

LONGITUDINAL SECTION

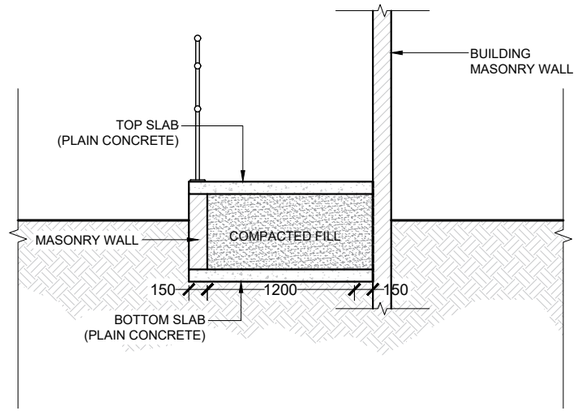

TRANSVERSE SECTION

TYPICAL RAMP FROM GROUND TO GROUND FLOOR

SCALE 1:50

0 0.25 0.5 1 2 METERS

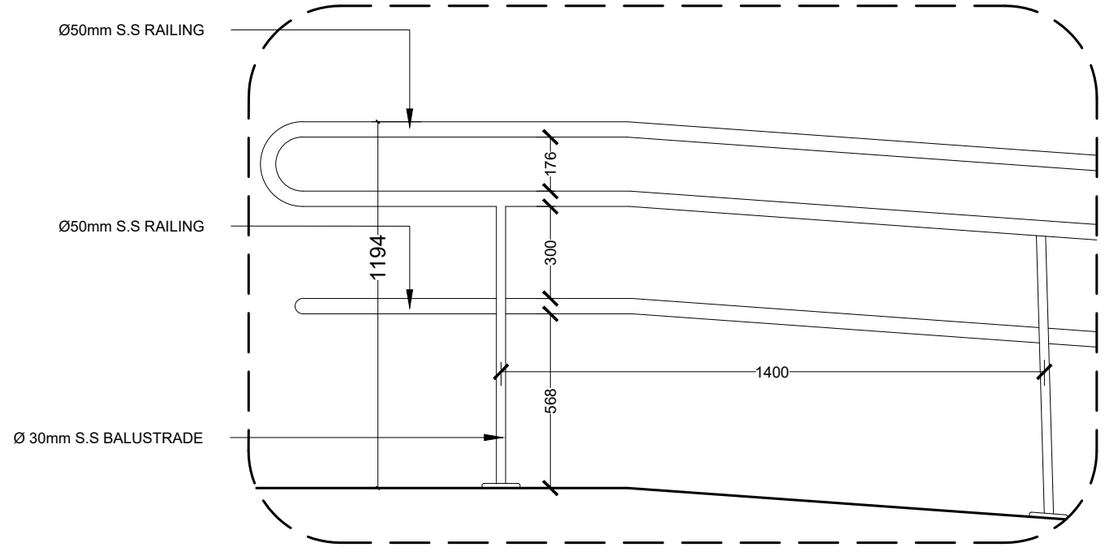

DETAIL 9
[RAMP RAILING]

SCALE 1:50

0 0.25 0.5 1 2 METERS

M T C C
MALDIVES TRANSPORT & CONTRACTING COMPANY PLC

SURVEY,DESIGN AND DEVELOPMENT SECTION
CONSTRUCTION AND PROJECTS MANGEMENT DEPARTMENT,
MTCC TOWER, BODU THAKURUFAANU MAGU, MALE 20181,
REPUBLIC OF MALDIVES,
PHONE:- (960) 332 6822,FAX: +(960) 333 2835
E-MAIL:- design.development@mtcc.com.mv

PROJECT TITLE	MID HOSPITAL PROJECT
DRAWING TITLE	AS GIVEN
CLIENT & ADDRESS	MINISTRY OF HEALTH
PROJECT LOCATION	-
DESIGN ARCHITECT:	SURVEYING, DESIGN AND DEVELOPMENT SECTION
ENGINEER:	IBRAHIM THOAM
STRUCTURAL CHECKER:	ABDULLA RAMEEZ
ARCHITECT:	AMINATH ZOONA
ARCHITECTURAL CHECKER:	IRFAN WAHEED
PAPER	A3
SCALE	AS GVN
DRAWN BY:	AMINATH SAMAHA
CHECKED BY:	HASSAN SHAHULAN
DATE	19-08-2020

REV	DESCRIPTION	DATE	APPR

SHEET IDENTIFICATION NUMBER

A5.05

SHEET TITLE

22

COPYRIGHT All plans, sketches, drawings, graphic representations and specifications prepared by the Architect(s) & Engineer(s) are instruments of service. The copyright and ownership of both the design and these instruments of service belong to the Architect(s) & Engineer(s) and may not be used for any other project, or sold, or offered for sale by any party other than the Architect/Engineer unless the Architect/Engineer has given written consent. Copies of the documents submitted to the client prepared by the Architect/Engineer maybe used as they were intended; once; and on the same site and project.

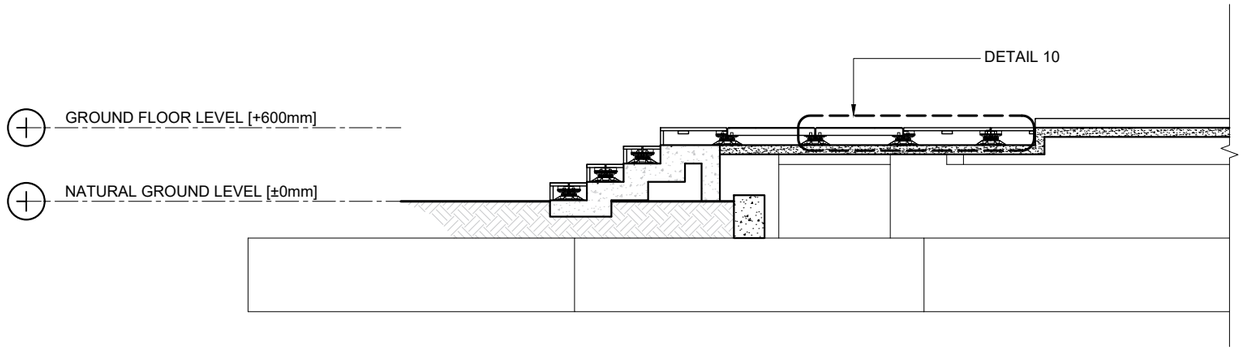

DECK DETAIL

SCALE 1:50

0 0.25 0.5 1 2 METERS

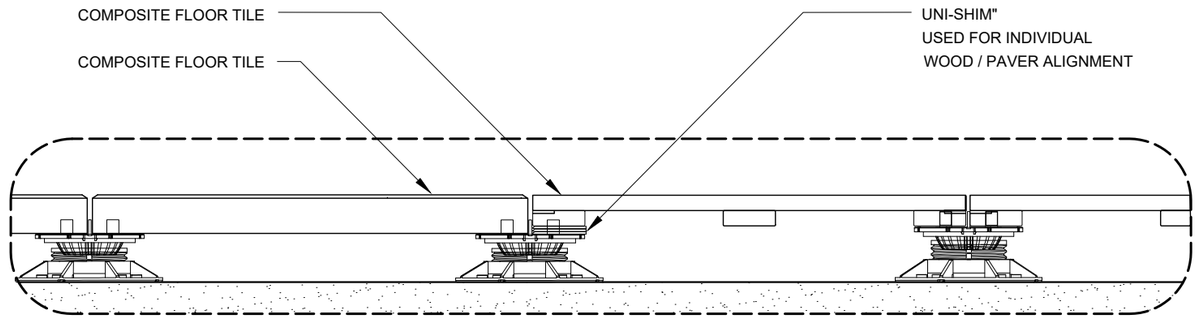

DETAIL 10

SCALE 1:10

0 0.05 0.1 0.2 0.4 METERS

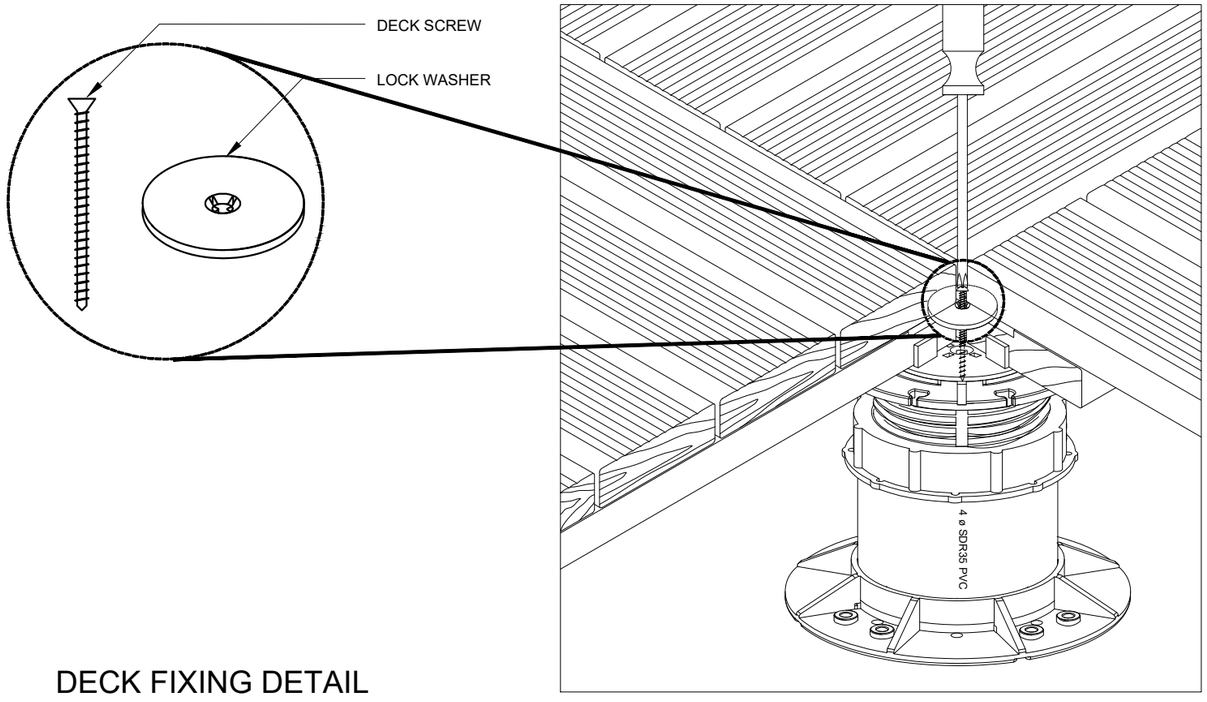

DECK FIXING DETAIL

SCALE NTS

NOTE:

INSERT THE LOCK WASHER IN TO THE KURF CUT BETWEEN THE UPPER SLAT AND BOTTOM RAIL OF 3 WOOD PAVERS. INSERT THE 4th PAVER IN TO THE 4TH CORNER. ONCE ALL 4 PAVERS ARE TIGHTLY IN PLACE INSERT SCREW THROUGH LOCK WASHER AND HAND TIGHTEN IN TO PEDESTAL TOP UNTIL ALL 4 PAVERS ARE SECURELY FASTENED TO THE PEDESTAL. DO NOT OVER TIGHTEN.

M T C C
MALDIVES TRANSPORT & CONTRACTING COMPANY PLC
SURVEY,DESIGN AND DEVELOPMENT SECTION
CONSTRUCTION AND PROJECTS MANGEMENT DEPARTMENT,
MTCC TOWER, BODU THAKURUFAANU MAGU, MALE' 20181,
REPUBLIC OF MALDIVES.
PHONE: + (960) 332 6822,FAX : + (960) 333 2835
E-MAIL: design.development@mtcc.com.mv

PROJECT TITLE	MID HOSPITAL PROJECT
DRAWING TITLE	AS GIVEN
CLIENT & ADDRESS	MINISTRY OF HEALTH
PROJECT LOCATION	-
DESIGN ARCHITECT:	SURVEYING, DESIGN AND DEVELOPMENT SECTION
ENGINEER:	IBRAHIM THOAM
STRUCTURAL CHECKER:	ABDULLA RAMEEZ
ARCHITECT:	AMINATH ZOONA
ARCHITECTURAL CHECKER:	IRFAN WAHEED
PAPER	A3
SCALE	AS GVN
DRAWN BY:	AMINATH SAMAHA
CHECKED BY:	HASSAN SHAHULAN
DATE	19-08-2020

REV	DESCRIPTION	DATE	APPR

SHEET IDENTIFICATION NUMBER

A5.06

SHEET TITLE

23

COPYRIGHT All plans, sketches, drawings, graphic representations and specifications prepared by the Architect(s) & Engineer(s) are instruments of service. The copyright and ownership of both the design and these instruments of service belong to the Architect(s) & Engineer(s) and may not be used for any other project, or sold, or offered for sale by any party other than the Architect/Engineer unless the Architect/Engineer has given written consent. Copies of the documents submitted to the client prepared by the Architect/Engineer maybe used as they were intended; once; and on the same site and project.

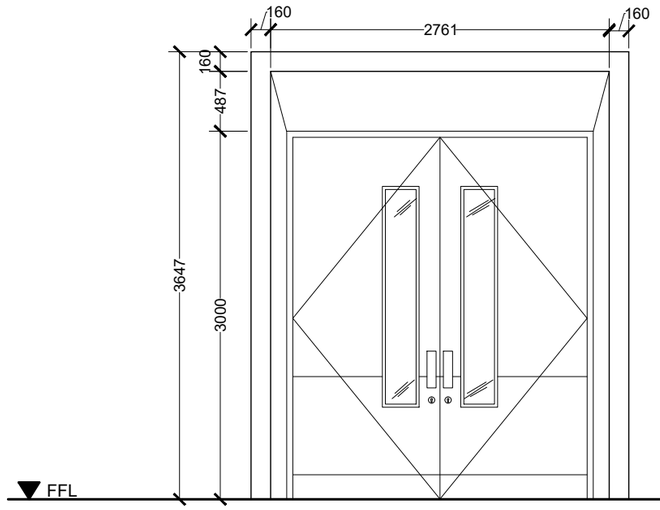

TYPICAL SHADING
DOUBLE DOOR

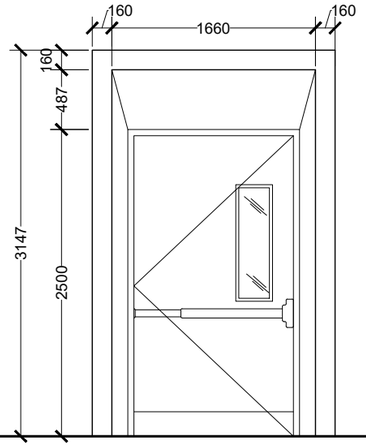

TYPICAL SHADING
SINGLE DOOR

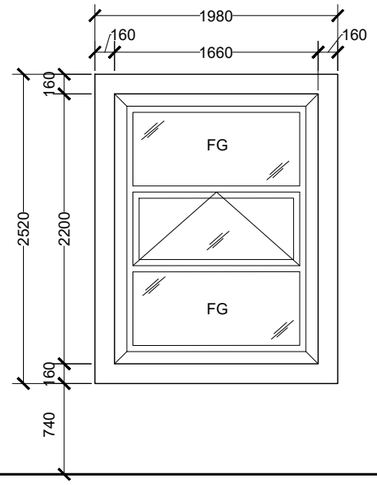

TYPICAL SHADING
WINDOW

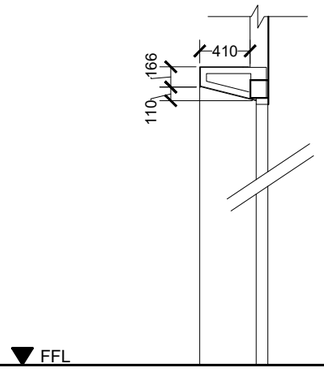

DOOR SHADING SECTION

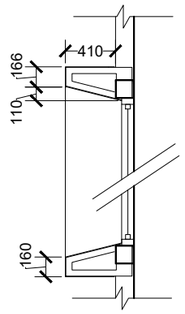

WINDOW SHADING SECTION

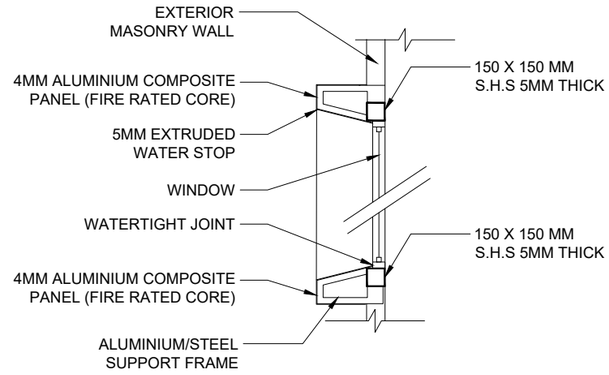

DETAIL 11
[SHADING SECTION]

DOOR WINDOW CLADDING SHADINGS DETAIL

SCALE 1:50

0 0.25 0.5 1 2 METERS

IMPORTANT NOTES:

- ALL MEASUREMENTS TO BE CHECKED AND VERIFIED ON SITE BEFORE FABRICATION.
- EXTERNAL UNITS COMPLY WITH THE FOLLOWING WEATHER CONDITIONS:
  WIND: 200KG/SQM
  WATER TIGHTNESS: 25KG/SQM
- ALL EXTERNAL FRAMES/ WALL JOINTS MUST BE SEALED WITH ANTI-FUNGAL EXTERIOR GRADE SILICON SEALANT
- DOOR SWINGS INDICATED ON FLOOR PLANS
- DOOR KNOBS SHALL BE 900MM ABOVE FINISHED FLOOR LEVEL

M T C C
MALDIVES TRANSPORT & CONTRACTING COMPANY PLC
SURVEY,DESIGN AND DEVELOPMENT SECTION
CONSTRUCTION AND PROJECTS MANAGEMENT DEPARTMENT,
MTCC TOWER, BODU THAKURUFAANU MAGU, MALE' 20181,
REPUBLIC OF MALDIVES.
PHONE: +(960) 332 6822 FAX: +(960) 333 2835
E-MAIL: design.development@mtcc.com.mv

PROJECT TITLE: MID HOSPITAL PROJECT	CLIENT & ADDRESS: MINISTRY OF HEALTH	DESIGN ARCHITECT: SURVEYING, DESIGN AND DEVELOPMENT SECTION			
		ENGINEER: IBRAHIM THOAM	STRUCTURAL CHECKER: ABDULLA RAMEEZ		
DRAWING TITLE: AS GIVEN	PROJECT LOCATION: -	ARCHITECT: AMINATH ZOONA	ARCHITECTURAL CHECKER: IRFAN WAHEED	PAPER: A3	SCALE: AS GVN
		DRAWN BY: AMINATH SAMAHA	CHECKED BY: HASSAN SHAHULAN	DATE: 19-08-2020	

REV	DESCRIPTION	DATE	APPR

SHEET IDENTIFICATION NUMBER
A5.07
SHEET TITLE
24

COPYRIGHT All plans, sketches, drawings, graphic representations and specifications prepared by the Architect(s) & Engineer(s) are instruments of service. The copyright and ownership of both the design and these instruments of service belong to the Architect(s) & Engineer(s) and may not be used for any other project, or sold, or offered for sale by any party other than the Architect/Engineer unless the Architect/Engineer has given written consent. Copies of the documents submitted to the client prepared by the Architect/Engineer maybe used as they were intended; once; and on the same site and project.

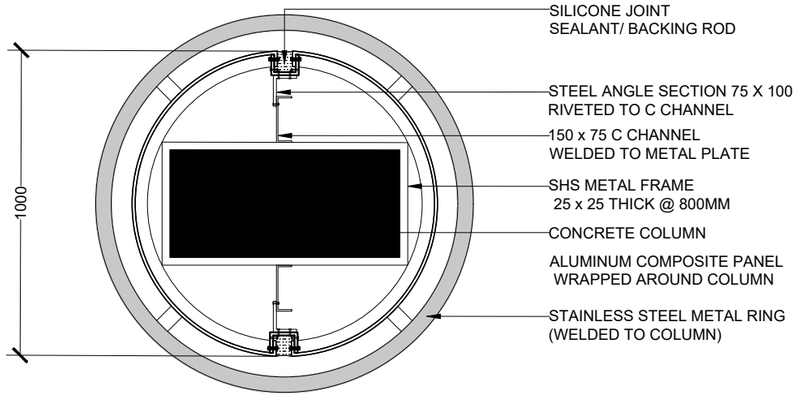

COLUMN CLAD PLAN VIEW

SCALE 1:20

0 0.1 0.2 0.4 0.8 METERS

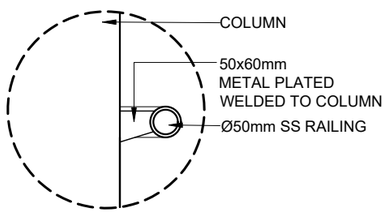

DETAIL 12
[COLUMN RAILING]

SCALE 1:20

0 0.1 0.2 0.4 0.8 METERS

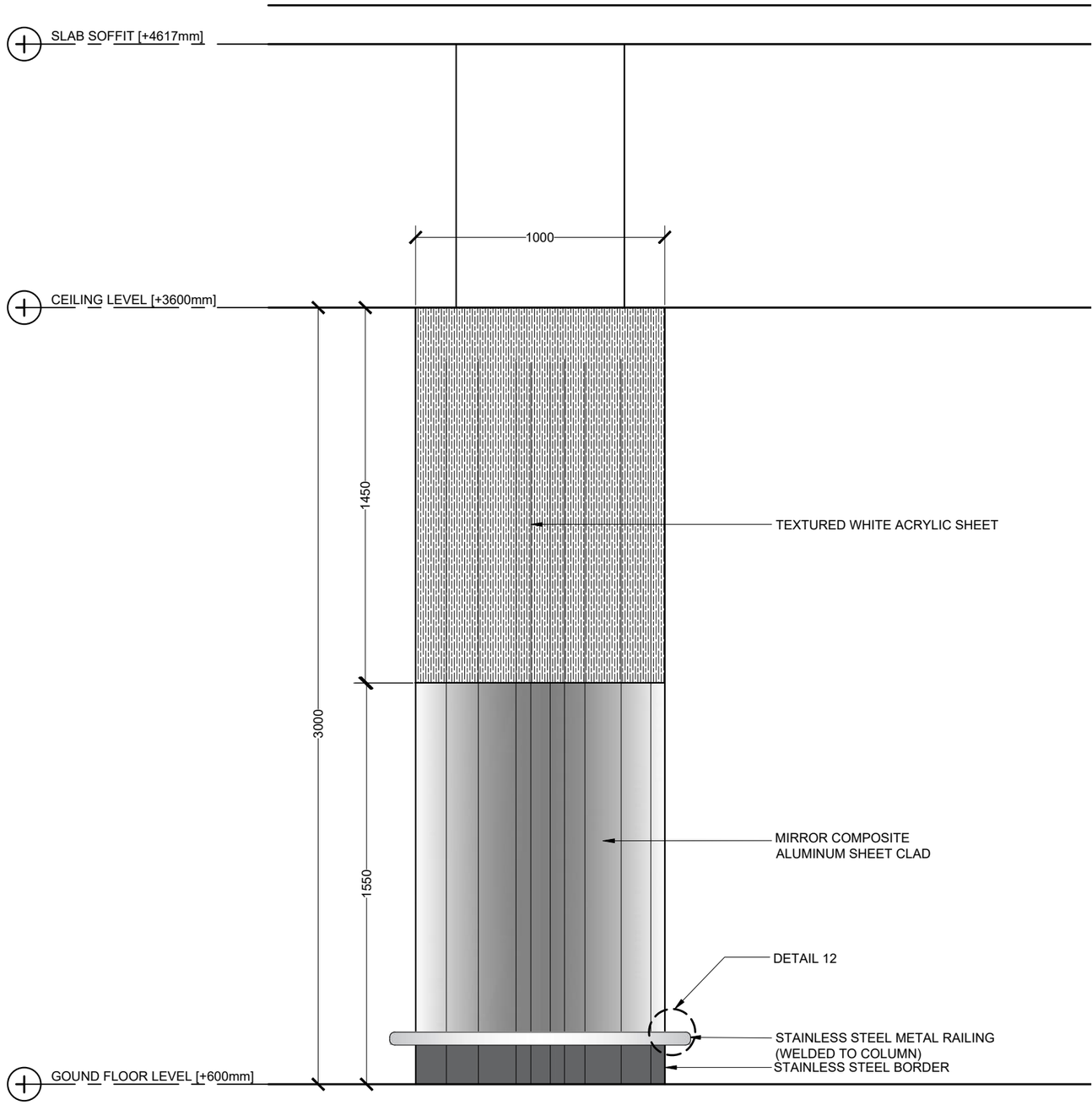

COLUMN ELEVATION

SCALE 1:20

0 0.1 0.2 0.4 0.8 METERS

INTERIOR COLUMN DETAIL

M T C C
MALDIVES TRANSPORT & CONTRACTING COMPANY PLC
SURVEY,DESIGN AND DEVELOPMENT SECTION
CONSTRUCTION AND PROJECTS MANGEMENT DEPARTMENT,
MTCC TOWER, BODU THAKURUFAANU MAGU, MALE 20181,
REPUBLIC OF MALDIVES,
PHONE: (+960) 332 6822 FAX: (+960) 333 2835
E-MAIL: design.development@mtcc.com.mv

PROJECT TITLE: MID HOSPITAL PROJECT	CLIENT & ADDRESS: MINISTRY OF HEALTH	DESIGN ARCHITECT: SURVEYING, DESIGN AND DEVELOPMENT SECTION				
		ENGINEER: IBRAHIM THOAM	STRUCTURAL CHECKER: ABDULLA RAMEEZ			
DRAWING TITLE: AS GIVEN	PROJECT LOCATION: -	ARCHITECT: AMINATH ZOONA	ARCHITECTURAL CHECKER: IRFAN WAHEED	PAPER: A3	SCALE: AS GVN	
		DRAWN BY: AMINATH SAMAHA	CHECKED BY: HASSAN SHAHULAN	DATE: 19-08-2020		

REV	DESCRIPTION	DATE	APPR

SHEET IDENTIFICATION NUMBER: A5.08

SHEET TITLE: 25

COPYRIGHT All plans, sketches, drawings, graphic representations and specifications prepared by the Architect(s) & Engineer(s) are instruments of service. The copyright and ownership of both the design and these instruments of service belong to the Architect(s) & Engineer(s) and may not be used for any other project, or sold, or offered for sale by any party other than the Architect/Engineer unless the Architect/Engineer has given written consent. Copies of the documents submitted to the client prepared by the Architect/Engineer maybe used as they were intended; once; and on the same site and project.

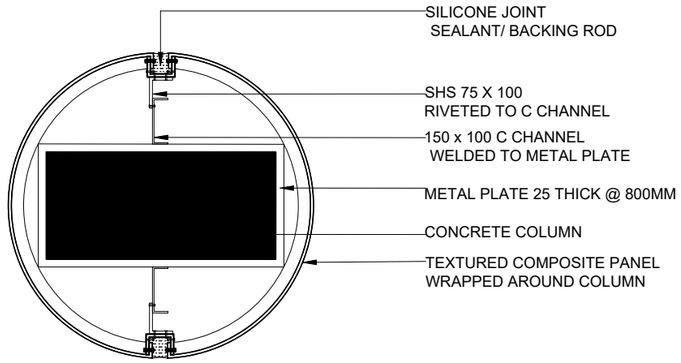

COLUMN CLAD PLAN VIEW

SCALE 1:20

0 0.1 0.2 0.4 0.8 METERS

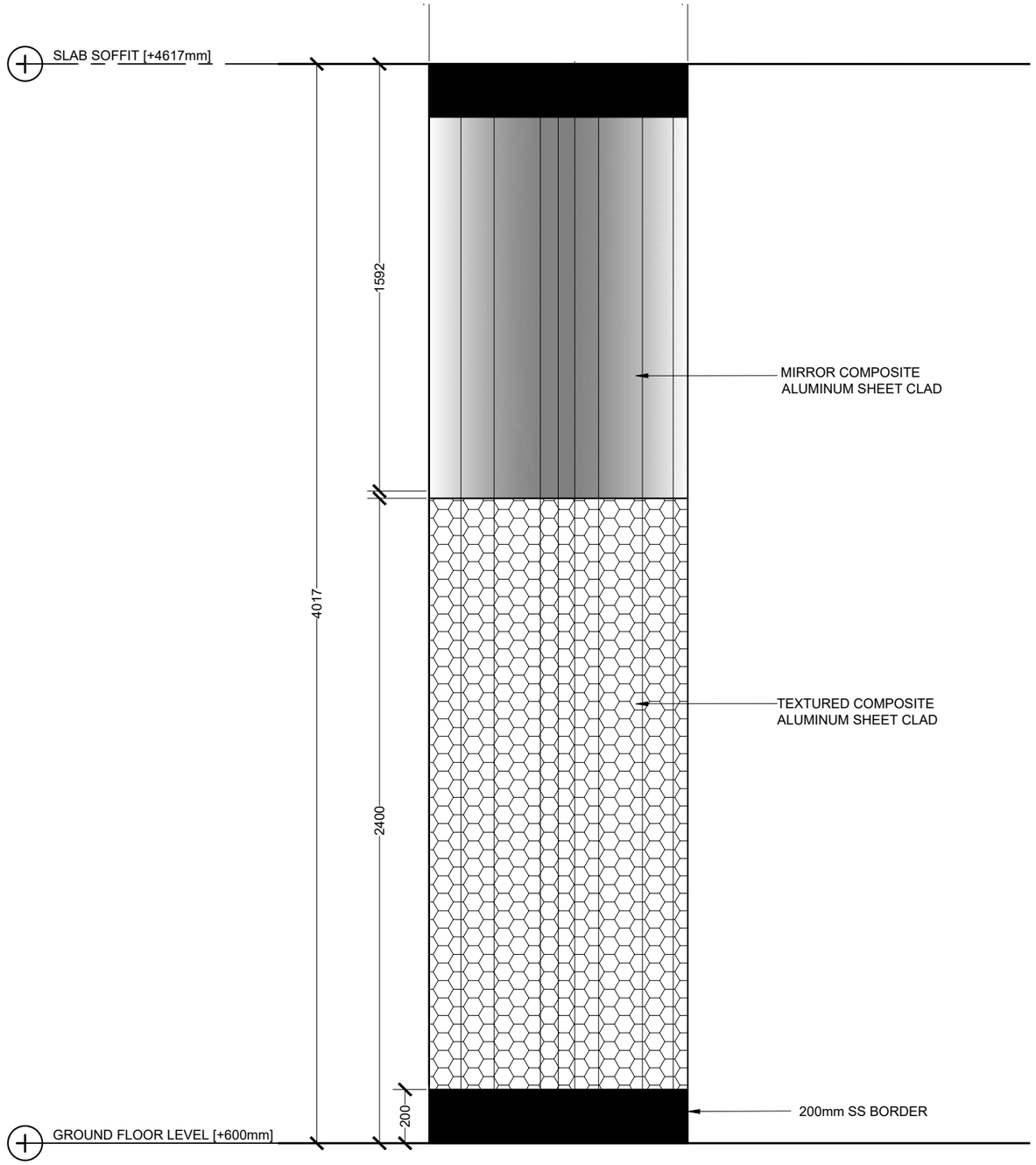

COLUMN ELEVATION

SCALE 1:20

0 0.1 0.2 0.4 0.8 METERS

EXTERIOR COLUMN 1 DETAIL

M T C C
MALDIVES TRANSPORT & CONTRACTING COMPANY PLC
SURVEY,DESIGN AND DEVELOPMENT SECTION
CONSTRUCTION AND PROJECTS MANGEMENT DEPARTMENT,
MTCC TOWER, BODU THAKURUFAANU MAGU, MALE 20181,
REPUBLIC OF MALDIVES,
PHONE: +(960) 332 6822,FAX: +(960) 333 2835
E-MAIL: design.development@mtcc.com.mv

PROJECT TITLE	MID HOSPITAL PROJECT
DRAWING TITLE	AS GIVEN
CLIENT & ADDRESS	MINISTRY OF HEALTH
PROJECT LOCATION	-
DESIGN ARCHITECT:	SURVEYING, DESIGN AND DEVELOPMENT SECTION
ENGINEER:	IBRAHIM THOAM
STRUCTURAL CHECKER:	ABDULLA RAMEEZ
ARCHITECT:	AMINATH ZOONA
ARCHITECTURAL CHECKER:	IRFAN WAHEED
PAPER	A3
SCALE	AS GVN
DRAWN BY:	AMINATH SAMAHA
CHECKED BY:	HASSAN SHAHULAN
DATE	19-08-2020

REV	DESCRIPTION	DATE	APPR

SHEET IDENTIFICATION NUMBER

A5.09

SHEET TITLE

26

COPYRIGHT All plans, sketches, drawings, graphic representations and specifications prepared by the Architect(s) & Engineer(s) are instruments of service. The copyright and ownership of both the design and these instruments of service belong to the Architect(s) & Engineer(s) and may not be used for any other project, or sold, or offered for sale by any party other than the Architect/Engineer unless the Architect/Engineer has given written consent. Copies of the documents submitted to the client prepared by the Architect/Engineer maybe used as they were intended; once; and on the same site and project.

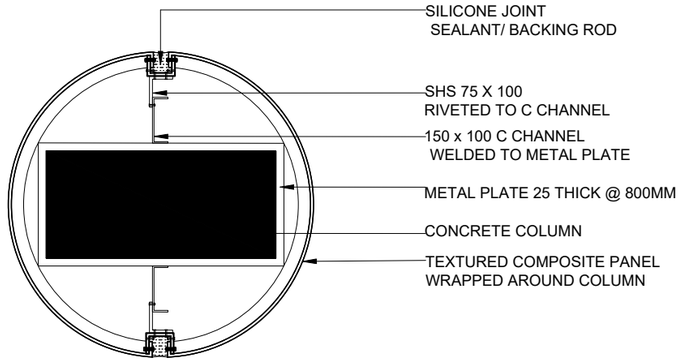

COLUMN CLAD PLAN VIEW

SCALE 1:20

0 0.1 0.2 0.4 0.8 METERS

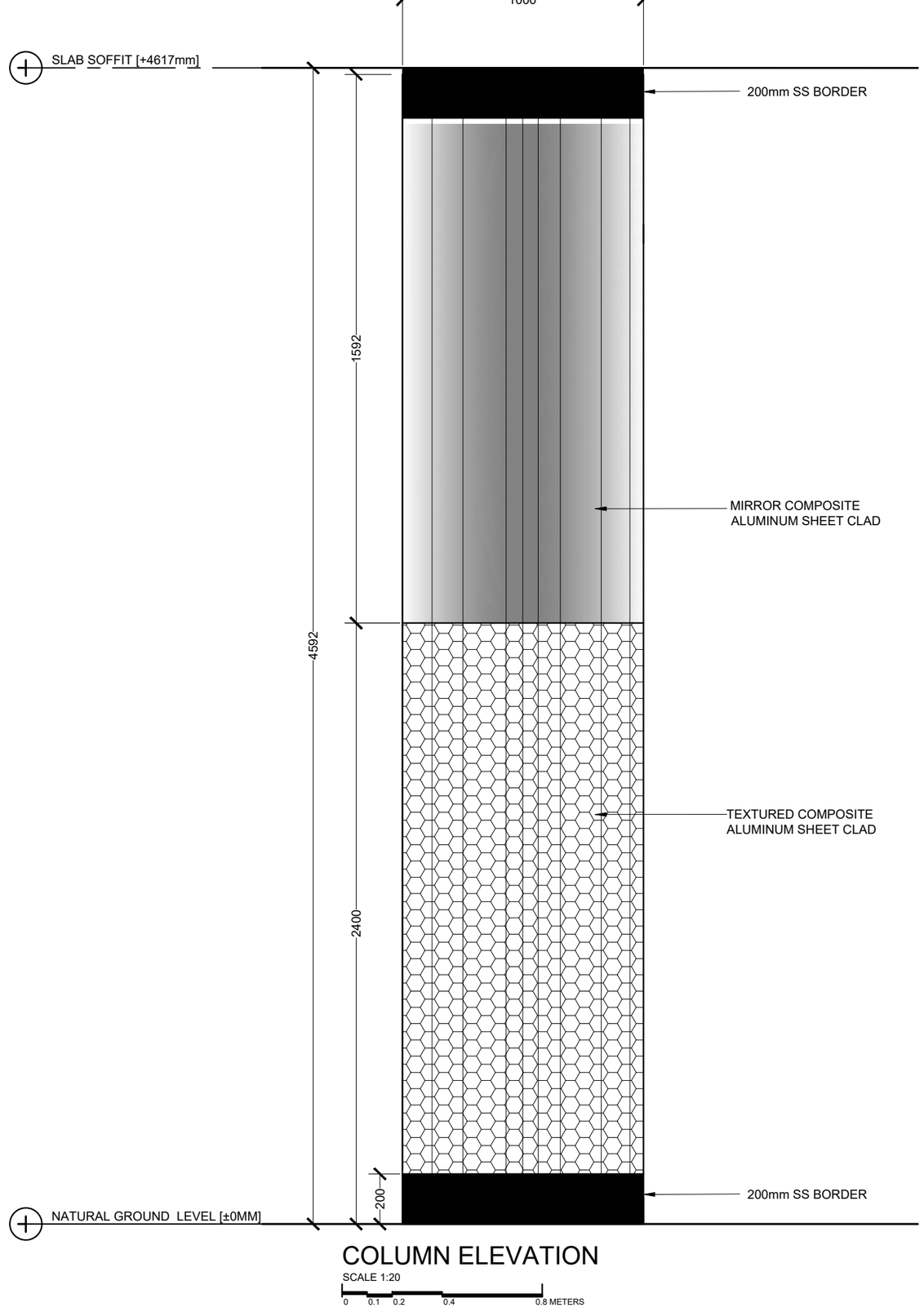

COLUMN ELEVATION

SCALE 1:20

0 0.1 0.2 0.4 0.8 METERS

EXTERIOR COLUMN 2 DETAIL

M T C C
MALDIVES TRANSPORT & CONTRACTING COMPANY PLC
SURVEY,DESIGN AND DEVELOPMENT SECTION
CONSTRUCTION AND PROJECTS MANGEMENT DEPARTMENT,
MTCC TOWER, BODU THAKURUFAANU MAGU, MALE 20181,
REPUBLIC OF MALDIVES,
PHONE: + (960) 332 6822,FAX: +(960) 333 2835
E-MAIL: design.development@mtcc.com.mv

PROJECT TITLE	MID HOSPITAL PROJECT
DRAWING TITLE	AS GIVEN
CLIENT & ADDRESS	MINISTRY OF HEALTH
PROJECT LOCATION	-
DESIGN ARCHITECT:	SURVEYING, DESIGN AND DEVELOPMENT SECTION
ENGINEER:	IBRAHIM THOAM
STRUCTURAL CHECKER:	ABDULLA RAMEEZ
ARCHITECT:	AMINATH ZOONA
ARCHITECTURAL CHECKER:	IRFAN WAHEED
PAPER	A3
SCALE	AS GVN
DRAWN BY:	AMINATH SAMAHA
CHECKED BY:	HASSAN SHAHULAN
DATE	19-08-2020

REV	DESCRIPTION	DATE	APPR

SHEET IDENTIFICATION NUMBER

A5.10

SHEET TITLE

27

COPYRIGHT All plans, sketches, drawings, graphic representations and specifications prepared by the Architect(s) & Engineer(s) are instruments of service. The copyright and ownership of both the design and these instruments of service belong to the Architect(s) & Engineer(s) and may not be used for any other project, or sold, or offered for sale by any party other than the Architect/Engineer unless the Architect/Engineer has given written consent. Copies of the documents submitted to the client prepared by the Architect/Engineer maybe used as they were intended; once; and on the same site and project.

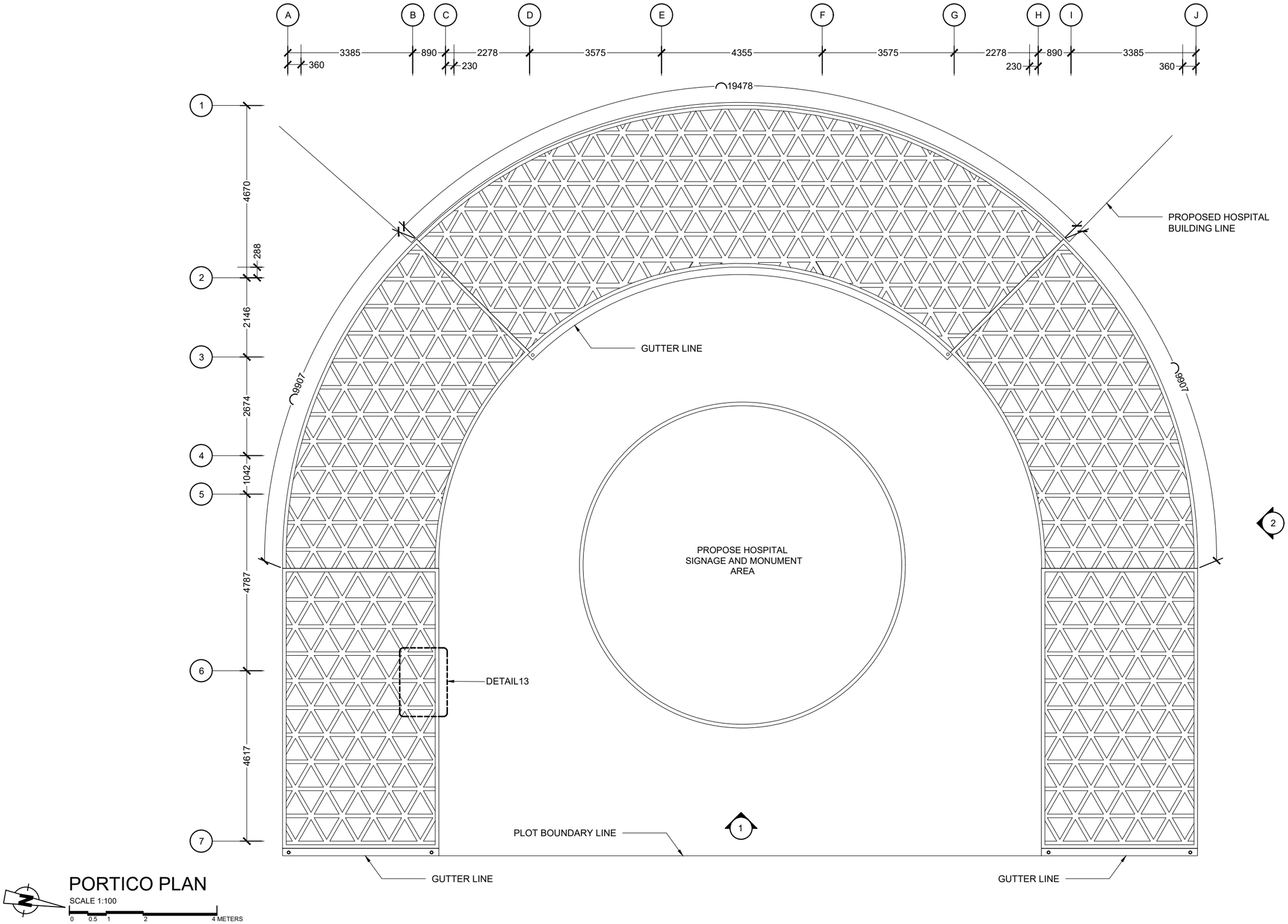

PORTICO PLAN

SCALE 1:100

0 0.5 1 2 4 METERS

M T C C
MALDIVES TRANSPORT & CONTRACTING COMPANY PLC
SURVEY,DESIGN AND DEVELOPMENT SECTION
CONSTRUCTION AND PROJECTS MANGEMENT DEPARTMENT
MTCC TOWER, BODU THAKURUFAANU MAGU, MALE' 20181,
REPUBLIC OF MALDIVES,
PHONE: + (960) 332 6822,FAX: + (960) 333 2835
E-MAIL: design.development@mtcc.com.mv

PROJECT TITLE	HA. HOARAFUSHI HOSPITAL BUILDING
DRAWING TITLE	AS GIVEN
CLIENT & ADDRESS	MINISTRY OF HEALTH
PROJECT LOCATION	HA. HOARAFUSHI
DESIGN ARCHITECT:	SURVEYING, DESIGN AND DEVELOPMENT SECTION
ENGINEER:	IBRAHIM THOAM
STRUCTURAL CHECKER:	ABDULLA RAMEEZ
ARCHITECT:	AMINATH ZOONA
ARCHITECTURAL CHECKER:	IRFAN WAHEED
PAPER	A3
SCALE	AS GVN
DRAWN BY:	HASSAN SHAHULAN
CHECKED BY:	AMINATH SAMAHA
DATE	02-07-2020

REV	DESCRIPTION	DATE	APPR

SHEET IDENTIFICATION NUMBER

A5.11

SHEET TITLE

28

COPYRIGHT All plans, sketches, drawings, graphic representations and specifications prepared by the Architect(s) & Engineer(s) are instruments of service. The copyright and ownership of both the design and these instruments of service belong to the Architect(s) & Engineer(s) and may not be used for any other project, or sold, or offered for sale by any party other than the Architect/Engineer unless the Architect/Engineer has given written consent. Copies of the documents submitted to the client prepared by the Architect/Engineer maybe used as they were intended; once; and on the same site and project.

ELEVATION 1

SCALE 1:100

0 0.5 1 2 4 METERS

MTCC
MALDIVES TRANSPORT & CONTRACTING COMPANY PLC

SURVEY,DESIGN AND DEVELOPMENT SECTION
CONSTRUCTION AND PROJECTS MANGEMENT DEPARTMENT,
MTCC TOWER, BODU THAKURUFAANU MAGU, MALÉ 20181,
REPUBLIC OF MALDIVES.
PHONE:+(960) 332 6822,FAX: +(960) 333 2835
E-MAIL: design.development@mtcc.com.mv

PROJECT TITLE	HA. HOARAFUSHI HOSPITAL BUILDING
DRAWING TITLE	AS GIVEN
CLIENT & ADDRESS	MINISTRY OF HEALTH
PROJECT LOCATION	HA. HOARAFUSHI
DESIGN ARCHITECT:	SURVEYING, DESIGN AND DEVELOPMENT SECTION
ENGINEER:	IBRAHIM THOAM
STRUCTURAL CHECKER:	ABDULLA RAMEEZ
ARCHITECT:	AMINATH ZOONA
ARCHITECTURAL CHECKER:	IRFAN WAHEED
PAPER	A3
SCALE	AS GVN
DRAWN BY:	HASSAN SHAHULAN
CHECKED BY:	AMINATH SAMAHA
DATE	02-07-2020

REV	DESCRIPTION	DATE	APPR

SHEET IDENTIFICATION NUMBER

A5.12

SHEET TITLE

29

COPYRIGHT All plans, sketches, drawings, graphic representations and specifications prepared by the Architect(s) & Engineer(s) are instruments of service. The copyright and ownership of both the design and these instruments of service belong to the Architect(s) & Engineer(s) and may not be used for any other project, or sold, or offered for sale by any party other than the Architect/Engineer unless the Architect/Engineer has given written consent. Copies of the documents submitted to the client prepared by the Architect/Engineer maybe used as they were intended; once; and on the same site and project.

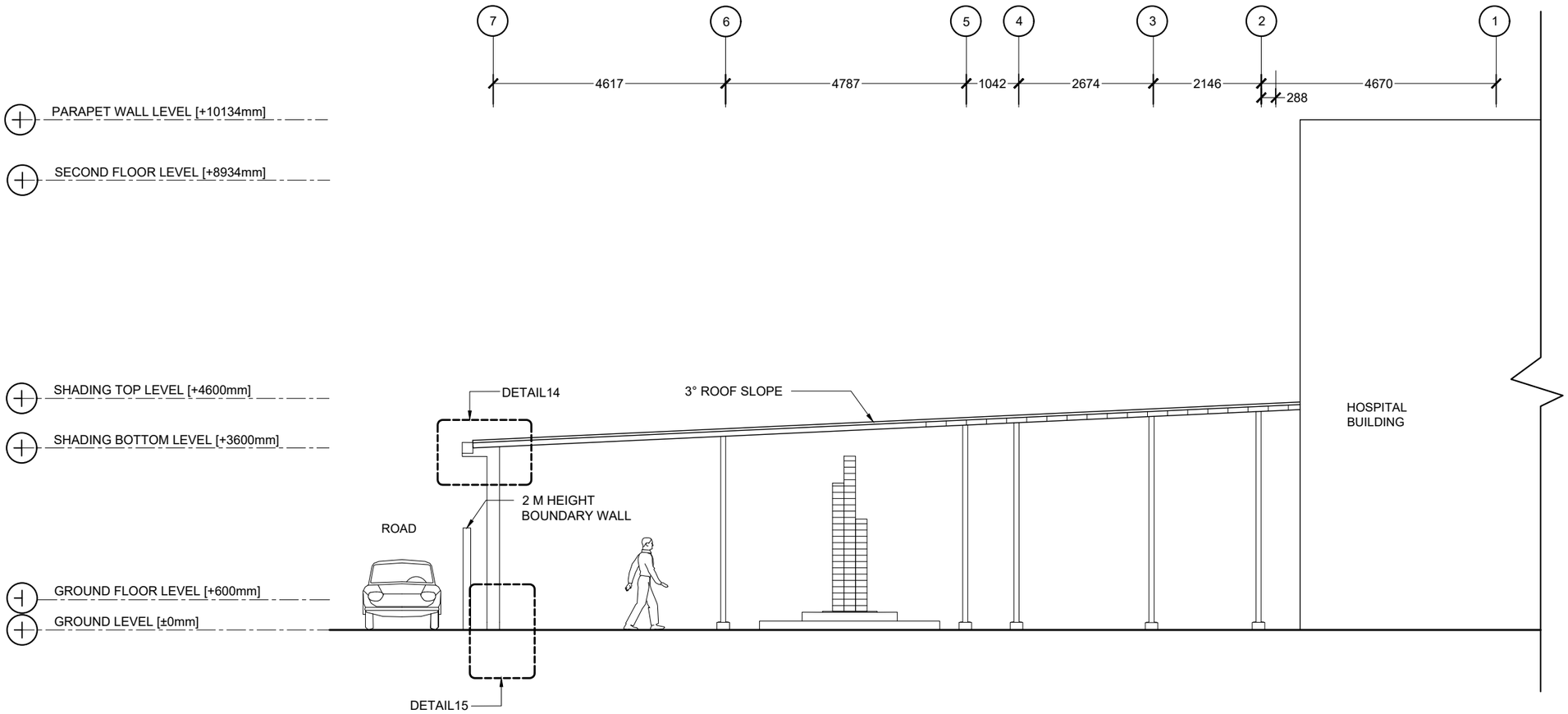

ELEVATION 2

SCALE 1:100

0 0.5 1 2 4 METERS

MTCC MALDIVES TRANSPORT & CONTRACTING COMPANY PLC SURVEY,DESIGN AND DEVELOPMENT SECTION CONSTRUCTION AND PROJECTS MANGEMENT DEPARTMENT, MTCC TOWER, BODU THAKURUFAANU MAGU, MALE' 20181, REPUBLIC OF MALDIVES. PHONE: +(960) 332 6822,FAX: +(960) 333 2835 E-MAIL: design.development@mtcc.com.mv	PROJECT TITLE: HA. HOARAFUSHI HOSPITAL BUILDING DRAWING TITLE: AS GIVEN	CLIENT & ADDRESS: MINISTRY OF HEALTH PROJECT LOCATION: HA. HOARAFUSHI	DESIGN ARCHITECT: SURVEYING, DESIGN AND DEVELOPMENT SECTION ENGINEER: IBRAHIM THOAM STRUCTURAL CHECKER: ABDULLA RAMEEZ ARCHITECT: AMINATH ZOONA ARCHITECTURAL CHECKER: IRFAN WAHEED PAPER: A3 SCALE: AS GVN DRAWN BY: HASSAN SHAHULAN CHECKED BY: AMINATH SAMAHA DATE: 02-07-2020	REV / DESCRIPTION / DATE / APPR		SHEET IDENTIFICATION NUMBER A5.13 SHEET TITLE 30

COPYRIGHT All plans, sketches, drawings, graphic representations and specifications prepared by the Architect(s) & Engineer(s) are instruments of service. The copyright and ownership of both the design and these instruments of service belong to the Architect(s) & Engineer(s) and may not be used for any other project, or sold, or offered for sale by any party other than the Architect/Engineer unless the Architect/Engineer has given written consent. Copies of the documents submitted to the client prepared by the Architect/Engineer maybe used as they were intended; once; and on the same site and project.

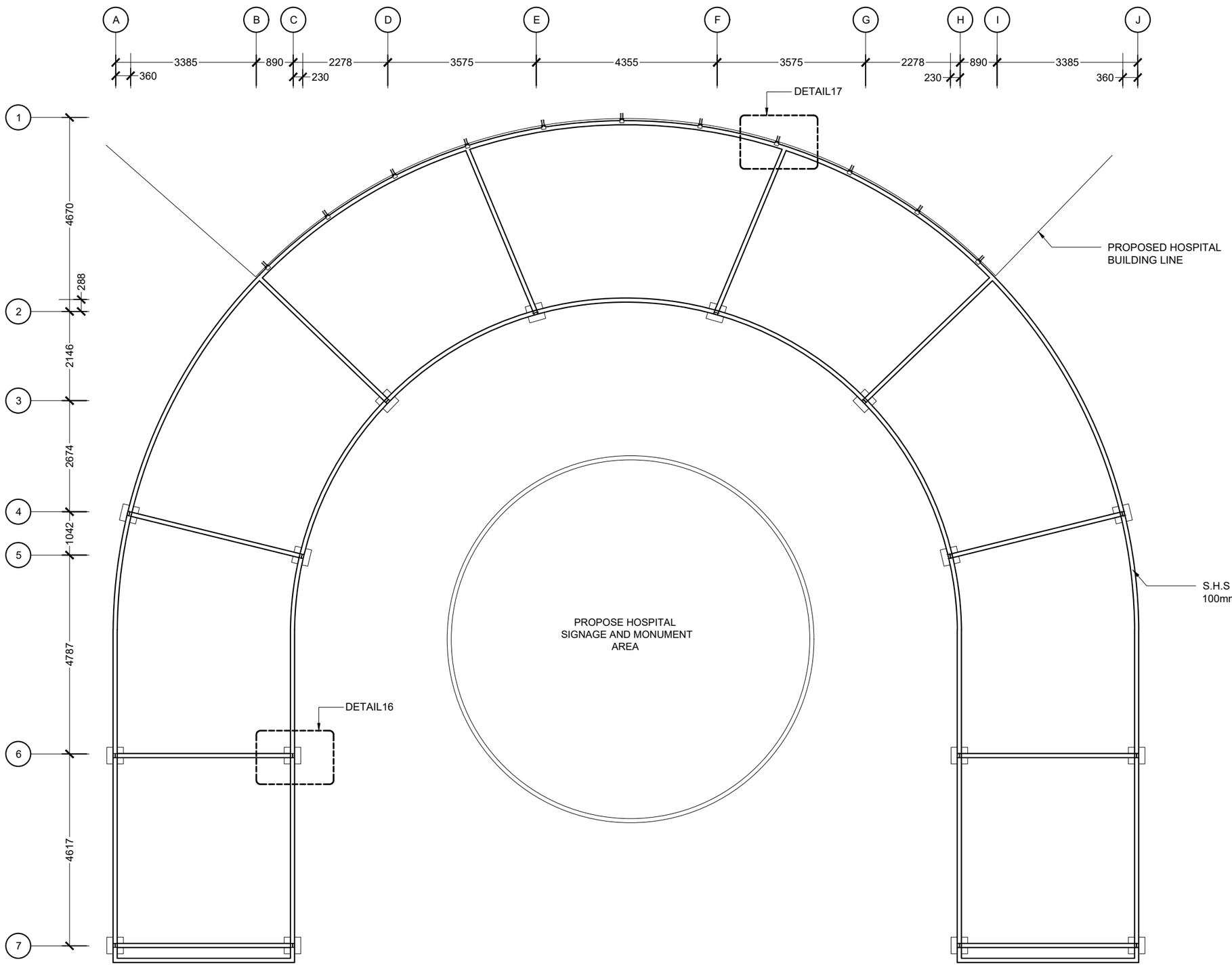

FRAMING PLAN

SCALE 1:100

0 0.5 1 2 4 METERS

M T C C
MALDIVES TRANSPORT & CONTRACTING COMPANY PLC

SURVEY,DESIGN AND DEVELOPMENT SECTION
CONSTRUCTION AND PROJECTS MANGEMENT DEPARTMENT,
MTCC TOWER, BODU THAKURUFAANU MAGU, MALE' 20181,
REPUBLIC OF MALDIVES.
PHONE:+(960) 332 6822,FAX: +(960) 333 2835
E-MAIL: design.development@mtcc.com.mv

PROJECT TITLE	HA. HOARAFUSHI HOSPITAL BUILDING
DRAWING TITLE	AS GIVEN
CLIENT & ADDRESS	MINISTRY OF HEALTH
PROJECT LOCATION	HA. HOARAFUSHI
DESIGN ARCHITECT:	SURVEYING, DESIGN AND DEVELOPMENT SECTION
ENGINEER:	IBRAHIM THOAM
STRUCTURAL CHECKER:	ABDULLA RAMEEZ
ARCHITECT:	AMINATH ZOONA
ARCHITECTURAL CHECKER:	IRFAN WAHEED
PAPER	A3
SCALE	AS GVN
DRAWN BY:	HASSAN SHAHULAN
CHECKED BY:	AMINATH SAMAHA
DATE	02-07-2020

REV	DESCRIPTION	DATE	APPR

SHEET IDENTIFICATION NUMBER

A5.14

SHEET TITLE

31

COPYRIGHT: All plans, sketches, drawings, graphic representations and specifications prepared by the Architect(s) & Engineer(s) are instruments of service. The copyright and ownership of both the design and these instruments of service belong to the Architect(s) & Engineer(s) and may not be used for any other project, or sold, or offered for sale by any party other than the Architect/Engineer unless the Architect/Engineer has given written consent. Copies of the documents submitted to the client prepared by the Architect/Engineer maybe used as they were intended; once, and on the same site and project.

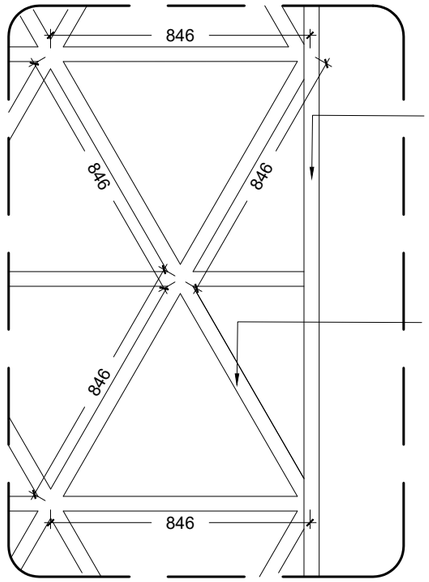

ROOF OUTER FRAME
S.H.S 100mm X 50mm
[WELD TO S.H.S COLUMNS]
WHITE PAINTED FINISH

TOP INTERNAL
METAL GRILL
S.H.S 50mm X 50mm
[WELD TO SUPPORTING
OUTER FRAME WORK]
WHITE PAINTED FINISH

DETAIL13
[METAL FRAME DETAILS]

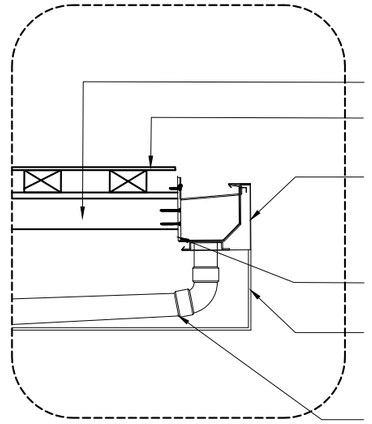

100mm X 50mm S.H.S SHADING FRAME

POLYCARBONATE SOLID SHEET
[REFER INSTALLATION DETAIL]

ALUMINUM FASCIA 255 MM LENGTH
WITH 100MM EXPANSION REVEAL JOIN
(WHITE FINISH)

ALUMINUM SUPPORT BRACKET

PIPE CLAD COVER
ALUMINUM SHEET
WHITE PAINTED FINISH

PVC DOWN PIPE
(ATTACHED TO NEAREST COLUMN)

DETAIL14
[SHADING & GUTTER DETAIL]

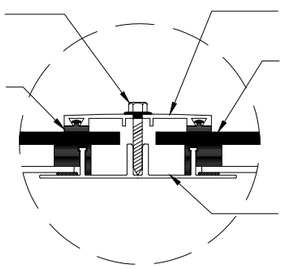

COACH SCREW
WITH RUBBER WASHER

SEALED
RUBBER PACKING

ALUMINUM TOP PROFILE

POLYCARBONATE SOLID SHEET
10mm THICK - FROSTED FINISH

BOTTOM ALUMINUM PROFILE

POLYCARBONATE INSTALLATION DETAIL
SCALE 1:5

DETAILS

SCALE 1:20

0 0.1 0.2 0.4 0.8 METERS

M T C C
MALDIVES TRANSPORT & CONTRACTING COMPANY PLC
SURVEY,DESIGN AND DEVELOPMENT SECTION
CONSTRUCTION AND PROJECTS MANGEMENT DEPARTMENT,
MTCC TOWER, BODU THAKURUFAANU MAGU, MALE' 20181,
REPUBLIC OF MALDIVES.
PHONE:+(960) 332 6822,FAX: +(960) 333 2835
E-MAIL: design.development@mtcc.com.mv

PROJECT TITLE	MID HOSPITAL PROJECT
DRAWING TITLE	AS GIVEN
CLIENT & ADDRESS	MINISTRY OF HEALTH
PROJECT LOCATION	-
DESIGN ARCHITECT:	SURVEYING, DESIGN AND DEVELOPMENT SECTION
ENGINEER:	IBRAHIM THOAM
STRUCTURAL CHECKER:	ABDULLA RAMEEZ
ARCHITECT:	AMINATH ZOONA
ARCHITECTURAL CHECKER:	IRFAN WAHEED
PAPER	A0
SCALE	AS GVN
DRAWN BY:	AMINATH SAMAHA
CHECKED BY:	HASSAN SHAHULAN
DATE	19-08-2020

REV	DESCRIPTION	DATE	APPR

SHEET IDENTIFICATION NUMBER
A5.15
SHEET TITLE
32

COPYRIGHT All plans, sketches, drawings, graphic representations and specifications prepared by the Architect(s) & Engineer(s) are instruments of service. The copyright and ownership of both the design and these instruments of service belong to the Architect(s) & Engineer(s) and may not be used for any other project, or sold, or offered for sale by any party other than the Architect/Engineer unless the Architect/Engineer has given written consent. Copies of the documents submitted to the client prepared by the Architect/Engineer maybe used as they were intended; once; and on the same site and project.

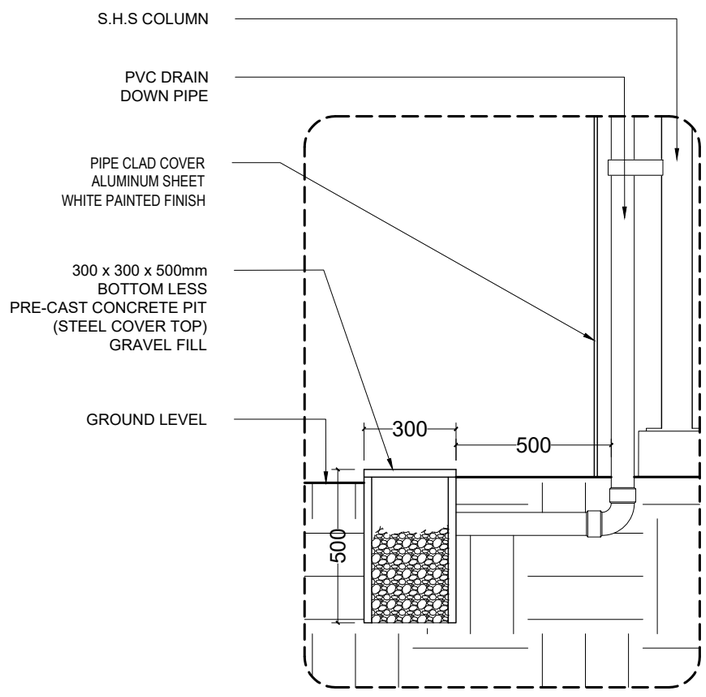

DETAIL15
[DRAINAGE DETAILS]

DETAILS

SCALE 1:20

0 0.1 0.2 0.4 0.8 METERS

M T C C
MALDIVES TRANSPORT & CONTRACTING COMPANY PLC
SURVEY,DESIGN AND DEVELOPMENT SECTION
CONSTRUCTION AND PROJECTS MANGEMENT DEPARTMENT,
MTCC TOWER, BODU THAKURUFAANU MAGU, MALE' 20181 ,
REPUBLIC OF MALDIVES,
PHONE: + (960) 332 6822,FAX: +(960) 333 2835
E-MAIL: design.development@mtcc.com.mv

PROJECT TITLE	HA. HOARAFUSHI HOSPITAL BUILDING
DRAWING TITLE	AS GIVEN
CLIENT & ADDRESS	MINISTRY OF HEALTH
PROJECT LOCATION	HA. HOARAFUSHI
DESIGN ARCHITECT:	SURVEYING, DESIGN AND DEVELOPMENT SECTION
ENGINEER:	IBRAHIM THOAM
STRUCTURAL CHECKER:	ABDULLA RAMEEZ
ARCHITECT:	AMINATH ZOONA
ARCHITECTURAL CHECKER:	IRFAN WAHEED
PAPER	A3
SCALE	AS GVN
DRAWN BY:	HASSAN SHAHULAN
CHECKED BY:	AMINATH SAMAHA
DATE	02-07-2020

REV	DESCRIPTION	DATE	APPR

SHEET IDENTIFICATION NUMBER

A5.16

SHEET TITLE

33

COPYRIGHT All plans, sketches, drawings, graphic representations and specifications prepared by the Architect(s) & Engineer(s) are instruments of service. The copyright and ownership of both the design and these instruments of service belong to the Architect(s) & Engineer(s) and may not be used for any other project, or sold, or offered for sale by any party other than the Architect/Engineer unless the Architect/Engineer has given written consent. Copies of the documents submitted to the client prepared by the Architect/Engineer maybe used as they were intended; once; and on the same site and project.

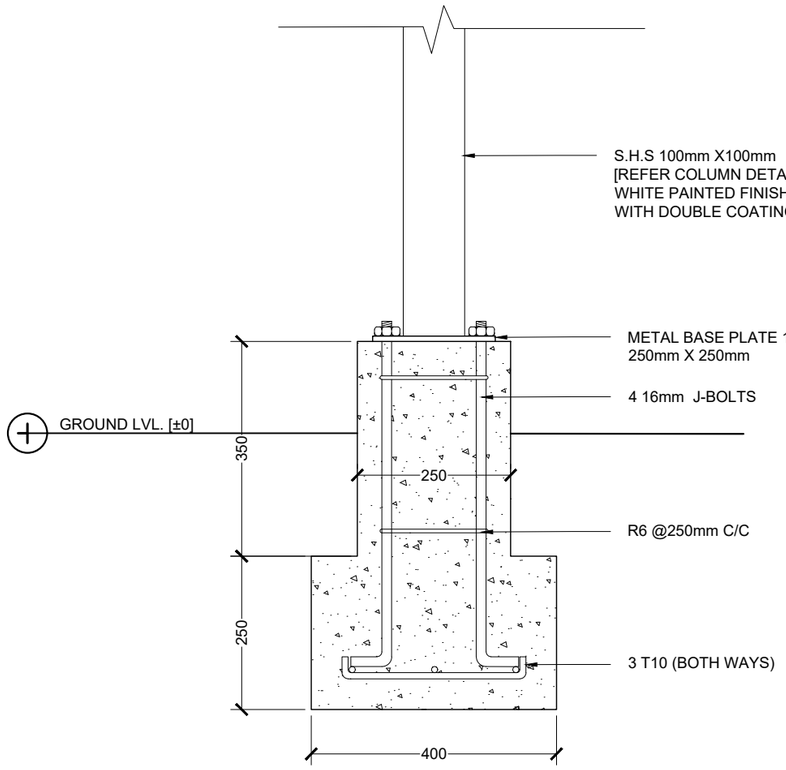

SECTION

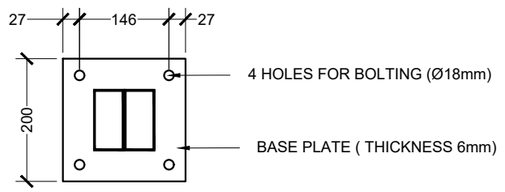

BASE PLATE DETAIL

COLUMN & BEAMS

DETAIL 16
[SHADED AREA FOOTING DETAIL]

SCALE 1:10

0 0.05 0.1 0.2 0.4 METERS

M T C C
MALDIVES TRANSPORT & CONTRACTING COMPANY PLC
SURVEY,DESIGN AND DEVELOPMENT SECTION
CONSTRUCTION AND PROJECTS MANGEMENT DEPARTMENT
MTCC TOWER, BODU THAKURUFAANU MAGU, MALE' 20181,
REPUBLIC OF MALDIVES.
PHONE: + (960) 332 6822 FAX: + (960) 333 2835
E-MAIL: design.development@mtcc.com.mv

PROJECT TITLE	HA. HOARAFUSHI HOSPITAL BUILDING
DRAWING TITLE	AS GIVEN
CLIENT & ADDRESS	MINISTRY OF HEALTH
PROJECT LOCATION	HA. HOARAFUSHI
DESIGN ARCHITECT:	SURVEYING, DESIGN AND DEVELOPMENT SECTION
ENGINEER:	IBRAHIM THOAM
STRUCTURAL CHECKER:	ABDULLA RAMEEZ
ARCHITECT:	AMINATH ZOONA
ARCHITECTURAL CHECKER:	IRFAN WAHEED
PAPER	A3
SCALE	AS GVN
DRAWN BY:	HASSAN SHAHULAN
CHECKED BY:	AMINATH SAMAHA
DATE	02-07-2020

REV	DESCRIPTION	DATE	APPR

SHEET IDENTIFICATION NUMBER
A5.17
SHEET TITLE
34

COPYRIGHT All plans, sketches, drawings, graphic representations and specifications prepared by the Architect(s) & Engineer(s) are instruments of service. The copyright and ownership of both the design and these instruments of service belong to the Architect(s) & Engineer(s) and may not be used for any other project, or sold, or offered for sale by any party other than the Architect/Engineer unless the Architect/Engineer has given written consent. Copies of the documents submitted to the client prepared by the Architect/Engineer maybe used as they were intended; once; and on the same site and project.

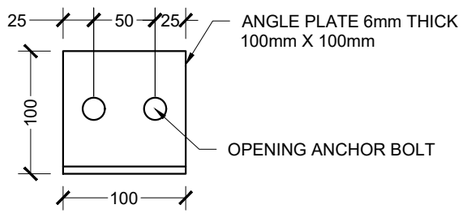

PLAN VIEW

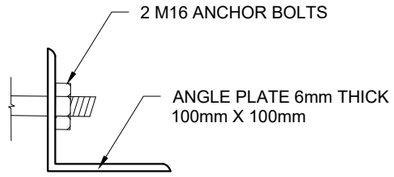

ELEVATION VIEW

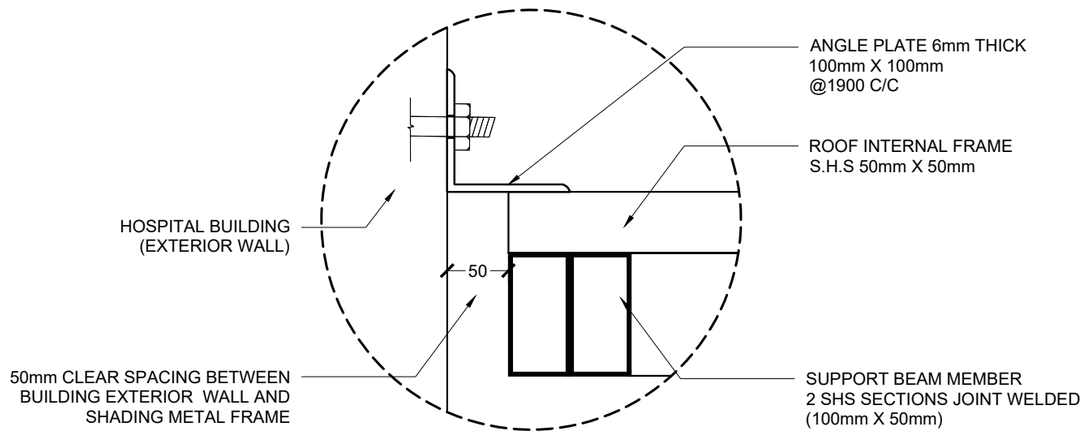

FIXING DETAIL

DETAIL 17
[SUPPORT PLATE DETAILS]

SCALE 1:05

0 0.025 0.05 0.1 0.2 METERS

M T C C
MALDIVES TRANSPORT & CONTRACTING COMPANY PLC

SURVEY,DESIGN AND DEVELOPMENT SECTION
CONSTRUCTION AND PROJECTS MANGEMENT DEPARTMENT,
MTCC TOWER, BODU THAKURUFAANU MAGU, MALÉ 20181,
REPUBLIC OF MALDIVES.
PHONE: + (960) 332 6822,FAX: +(960) 333 2835
E-MAIL: design.development@mtcc.com.mv

PROJECT TITLE	HA. HOARAFUSHI HOSPITAL BUILDING
DRAWING TITLE	AS GIVEN
CLIENT & ADDRESS	MINISTRY OF HEALTH
PROJECT LOCATION	HA. HOARAFUSHI
DESIGN ARCHITECT:	SURVEYING, DESIGN AND DEVELOPMENT SECTION
ENGINEER:	IBRAHIM THOAM
STRUCTURAL CHECKER:	ABDULLA RAMEEZ
ARCHITECT:	AMINATH ZOONA
ARCHITECTURAL CHECKER:	IRFAN WAHEED
PAPER	A3
SCALE	AS GVN
DRAWN BY:	HASSAN SHAHULAN
CHECKED BY:	AMINATH SAMAHA
DATE	02-07-2020

REV	DESCRIPTION	DATE	APPR

SHEET IDENTIFICATION NUMBER

A5.18

SHEET TITLE

35

COPYRIGHT All plans, sketches, drawings, graphic representations and specifications prepared by the Architect(s) & Engineer(s) are instruments of service. The copyright and ownership of both the design and these instruments of service belong to the Architect(s) & Engineer(s) and may not be used for any other project, or sold, or offered for sale by any party other than the Architect/Engineer unless the Architect/Engineer has given written consent. Copies of the documents submitted to the client prepared by the Architect/Engineer maybe used as they were intended; once; and on the same site and project.

LABEL	D1	D2	D3	D4	D5
	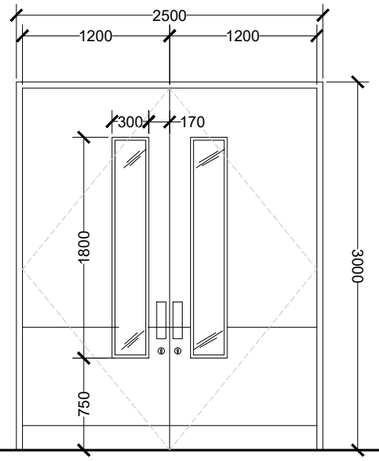	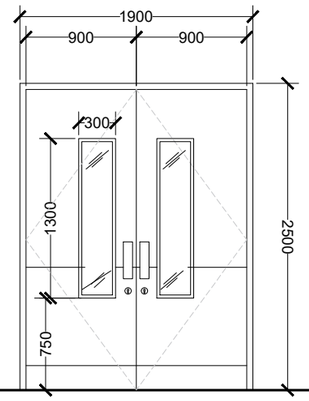	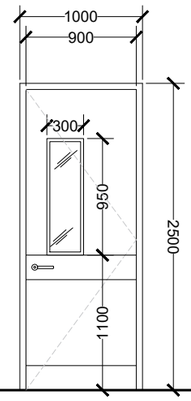	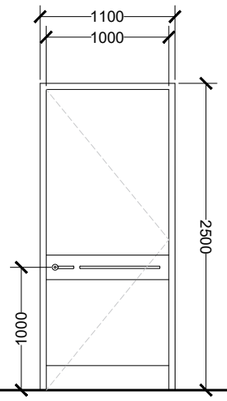	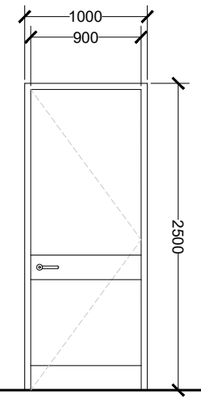
DESCRIPTION	GRP DOOR	GRP DOOR	GRP DOOR	GRP DOOR	GRPDOOR
DOOR FRAME	POWDER COATED ALUMINUM IN BLACK	POWDER COATED ALUMINUM IN BLACK	POWDER COATED ALUMINUM IN BLACK	POWDER COATED ALUMINUM IN BLACK	POWDER COATED ALUMINUM IN BLACK
DOOR PANEL	GRP DOOR PANEL WITH GLAZING	GRP DOOR PANEL WITH GLAZING	GRP DOOR PANEL WITH GLAZING	GRP DOOR PANEL	GRP DOOR PANEL
HARDWARE	AUTOMATIC SWING DOOR OPERATORS, CONCEALED DOOR CLOSER, SS HINGES AND HANDLES	AUTOMATIC SWING DOOR OPERATORS, CONCEALED DOOR CLOSER, SS HINGES AND HANDLES	CONCEALED DOOR CLOSER, SS HINGES AND HANDLES	CONCEALED DOOR CLOSER, SS HINGES AND HANDLES, SS GARB BAR FROM THE INSIDE ONLY	CONCEALED DOOR CLOSER, SS HINGES AND HANDLES
COMMENTS	200mm STAINLESS STEEL BORDER @ BOTTOM OF DOOR	200mm STAINLESS STEEL BORDER @ BOTTOM OF DOOR	200mm STAINLESS STEEL BORDER @ BOTTOM OF DOOR AND @ 900mm	200mm STAINLESS STEEL BORDER @ BOTTOM OF DOOR AND @ 900mm	200mm STAINLESS STEEL BORDER @ BOTTOM OF DOOR
LOCATION(S)	EMERGENCY ROOM	EMERGENCY ROOM, LABOUR, SERVICE CORRIDOR, WARD ENTRANCES, LABORATORY	ALL UTILITY ROOMS, DIRTY CORRIDOR	ALL IN-PATEINT TOILETS	STAFF TOILET, JANITORIAL, PUBLIC TOILETS, PRAYER ROOMS, TEA ROOM.
NO(S)	1	12	33	12	28

DOOR WINDOW SCHEDULE

SCALE 1:50

0 0.25 0.5 1 2 METERS

IMPORTANT NOTES:

- FG - FIXED GLASS
- ALL MEASUREMENTS TO BE CHECKED AND VERIFIED ON SITE BEFORE FABRICATION.
- EXTERNAL UNITS COMPLY WITH THE FOLLOWING WEATHER CONDITIONS:
  WIND: 200KG/SQM
  WATER TIGHTNESS: 25KG/SQM
- ALL EXTERNAL FRAMES/ WALL JOINTS MUST BE SEALED WITH ANTI-FUNGAL EXTERIOR GRADE SILICON SEALANT
- DOOR SWINGS INDICATED ON FLOOR PLANS
- DOOR KNOBS SHALL BE 900MM ABOVE FINISHED FLOOR LEVEL

M T C C
MALDIVES TRANSPORT & CONTRACTING COMPANY PLC
SURVEY,DESIGN AND DEVELOPMENT SECTION
CONSTRUCTION AND PROJECTS MANGEMENT DEPARTMENT,
MTCC TOWER, BODU THAKURUFAANU MAGU, MALE' 20181,
REPUBLIC OF MALDIVES.
PHONE:+(960) 332 6822,FAX: +(960) 333 2835
E-MAIL: design.development@mtcc.com.mv

PROJECT TITLE: MID HOSPITAL PROJECT

DRAWING TITLE: AS GIVEN

CLIENT & ADDRESS: MINISTRY OF HEALTH

PROJECT LOCATION: -

DESIGN ARCHITECT: SURVEYING, DESIGN AND DEVELOPMENT SECTION

ENGINEER: IBRAHIM THOAM

STRUCTURAL CHECKER: ABDULLA RAMEEZ

ARCHITECT: AMINATH ZOONA

ARCHITECTURAL CHECKER: IRFAN WAHEED

PAPER: A3

SCALE: AS GVN

DRAWN BY: AMINATH SAMAHA

CHECKED BY: HASSAN SHAHULAN

DATE: 19-08-2020

REV	DESCRIPTION	DATE	APPR

SHEET IDENTIFICATION NUMBER: A6.01

SHEET TITLE: 36

COPYRIGHT All plans, sketches, drawings, graphic representations and specifications prepared by the Architect(s) & Engineer(s) are instruments of service. The copyright and ownership of both the design and these instruments of service belong to the Architect(s) & Engineer(s) and may not be used for any other project, or sold, or offered for sale by any party other than the Architect/Engineer unless the Architect/Engineer has given written consent. Copies of the documents submitted to the client prepared by the Architect/Engineer maybe used as they were intended; once; and on the same site and project.

LABEL	D6	D6A	D7	D8	D8A
	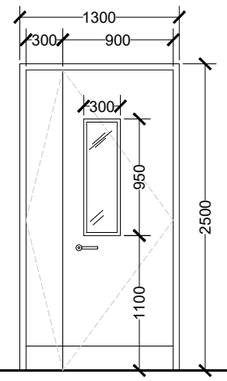	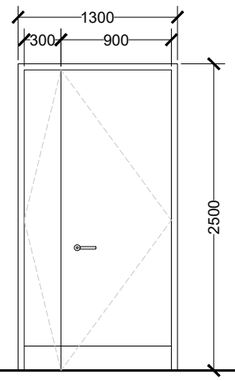	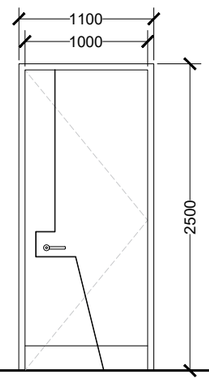	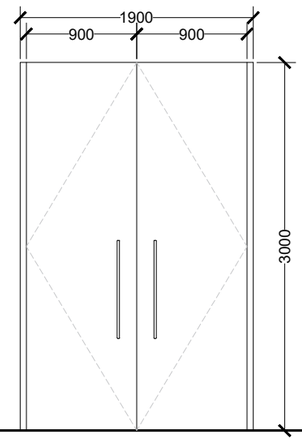	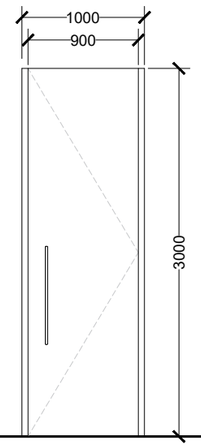
DESCRIPTION	GRP DOOR	GRP DOOR	GRP DOOR	WOODEN DOOR	WOODEN DOOR
DOOR FRAME	POWDER COATED ALUMINUM IN BLACK	POWDER COATED ALUMINUM IN BLACK	POWDER COATED ALUMINUM IN BLACK	POWDER COATED ALUMINUM IN BLACK	POWDER COATED ALUMINUM IN BLACK
DOOR PANEL	GRP DOOR PANEL, WITH GLAZING	GRP DOOR PANEL WITH LED LINING	GRP DOOR PANEL WITH 10mm GROOVE IN BLACK	WOOD DOOR PANEL	WOOD DOOR PANEL
HARDWARE	CONCEALED DOOR CLOSER, SS HINGES AND HANDLES	CONCEALED DOOR CLOSER, SS HINGES AND HANDLES	CONCEALED DOOR CLOSER, SS HINGES AND HANDLES	CONCEALED DOOR CLOSER, SS HINGES WITH BLACK SS HANDLES	CONCEALED DOOR CLOSER, SS HINGES WITH BLACK SS HANDLES
COMMENTS	200mm STAINLESS STEEL BORDER @ BOTTOM OF DOOR	200mm STAINLESS STEEL BORDER @ BOTTOM OF DOOR	200mm STAINLESS STEEL BORDER @ BOTTOM OF DOOR	-	-
LOCATION(S)	PRIVATE ROOMS, ISOLATION WARD, LABOUR AREA, MINIOR THEATER AND NICU	XRAY ROOM	CONSULTATION ROOMS, TREATMENT ROOMS, PROCEDURE ROOM, ECG ROOM,	WAITING AND REFRESHMENT AREA FOR CONFERENCE AND TRAINING ROOM	MEETING ROOM , MANAGERS OFFICE
NO(S)	14	1	18	1	3

DOOR WINDOW SCHEDULE

SCALE 1:50

0 0.25 0.5 1 2 METERS

IMPORTANT NOTES:

- FG - FIXED GLASS
- ALL MEASUREMENTS TO BE CHECKED AND VERIFIED ON SITE BEFORE FABRICATION.
- EXTERNAL UNITS COMPLY WITH THE FOLLOWING WEATHER CONDITIONS:
  WIND: 200KG/SQM
  WATER TIGHTNESS: 25KG/SQM
- ALL EXTERNAL FRAMES/ WALL JOINTS MUST BE SEALED WITH ANTI-FUNGAL EXTERIOR GRADE SILICON SEALANT
- DOOR SWINGS INDICATED ON FLOOR PLANS
- DOOR KNOBS SHALL BE 900MM ABOVE FINISHED FLOOR LEVEL

M T C C
MALDIVES TRANSPORT & CONTRACTING COMPANY PLC
SURVEY,DESIGN AND DEVELOPMENT SECTION
CONSTRUCTION AND PROJECTS MANGEMENT DEPARTMENT,
MTCC TOWER, BODU THAKURUFAANU MAGU, MALE' 20181,
REPUBLIC OF MALDIVES,
PHONE:+(960) 332 6822,FAX: +(960) 333 2835
E-MAIL: design.development@mtcc.com.mv

PROJECT TITLE: MID HOSPITAL PROJECT

DRAWING TITLE: AS GIVEN

CLIENT & ADDRESS: MINISTRY OF HEALTH

PROJECT LOCATION: -

DESIGN ARCHITECT: SURVEYING, DESIGN AND DEVELOPMENT SECTION

ENGINEER: IBRAHIM THOAM

STRUCTURAL CHECKER: ABDULLA RAMEEZ

ARCHITECT: AMINATH ZOONA

ARCHITECTURAL CHECKER: IRFAN WAHEED

PAPER: A3

SCALE: AS GVN

DRAWN BY: AMINATH SAMAHA

CHECKED BY: HASSAN SHAHULAN

DATE: 19-08-2020

REV	DESCRIPTION	DATE	APPR

SHEET IDENTIFICATION NUMBER: A6.02

SHEET TITLE: 37

COPYRIGHT All plans, sketches, drawings, graphic representations and specifications prepared by the Architect(s) & Engineer(s) are instruments of service. The copyright and ownership of both the design and these instruments of service belong to the Architect(s) & Engineer(s) and may not be used for any other project, or sold, or offered for sale by any party other than the Architect/Engineer unless the Architect/Engineer has given written consent. Copies of the documents submitted to the client prepared by the Architect/Engineer maybe used as they were intended; once; and on the same site and project.

LABEL	D9	D10	D11	D12	D13
	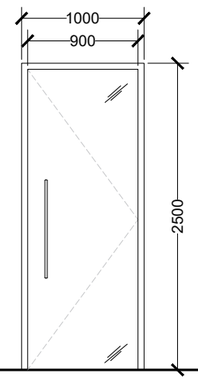	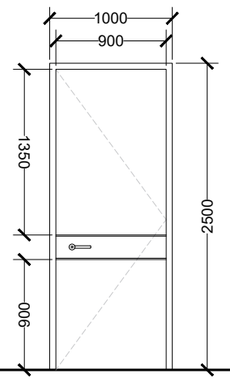	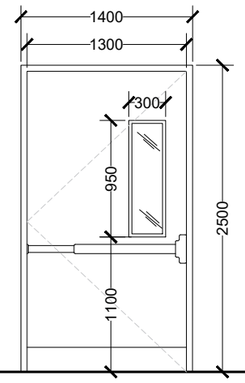	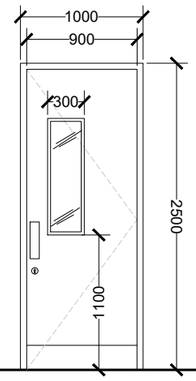	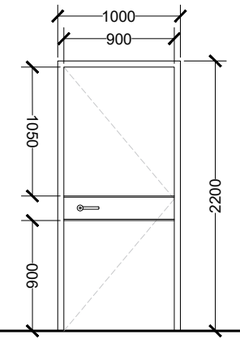
DESCRIPTION	TEMPERED GLASS DOOR	GRP DOOR	GPR DOOR	GRP DOOR	GRP DOOR
DOOR FRAME	POWDER COATED ALUMINUM IN BLACK	POWDER COATED ALUMINUM IN BLACK	POWDER COATED ALUMINUM IN BLACK	POWDER COATED ALUMINUM IN BLACK	POWDER COATED ALUMINUM IN BLACK
DOOR PANEL	20mm TEMPERED GLASS DOOR	GRP DOOR PANEL, WITH 10mm GROOVE IN BLACK	GRP DOOR PANEL WITH GLAZING	GRP DOOR PANEL WITH GLAZING	GRP DOOR PANEL, WITH 10mm GROOVE IN BLACK
HARDWARE	DOOR CLOSER, SS HINGES, BLACK SS HANDLES	CONCEALED DOOR CLOSER, SS HINGES AND HANDLES	CONCEALED DOOR CLOSER, SS HINGES, EMERGENCY EXIT HANDLE	CONCEALED DOOR CLOSER, SS DOUBLE ACTING HINGES AND HANDLES	CONCEALED DOOR CLOSER, SS HINGES AND HANDLES
COMMENTS	-	-	200mm STAINLESS STEEL BORDER @ BOTTOM OF DOOR	200mm STAINLESS STEEL BORDER @ BOTTOM OF DOOR	-
LOCATION(S)	OFFICE ENTRANCES, CONFERENCE HALL, TRAINING ROOM, BLOOD BANK, LABORATORY AREAS, PLAY AREA	NURSE AND DOCTORS LOUNGE, NICU STAFF ENTRANCE, OT STAFF ENTRANCE	EMERGENCY EXIT	CANTEEN	MACHINE ROOM
NO(S)	19	9	1	1	1

DOOR WINDOW SCHEDULE

SCALE 1:50

0 0.25 0.5 1 2 METERS

IMPORTANT NOTES:

- FG - FIXED GLASS
- ALL MEASUREMENTS TO BE CHECKED AND VERIFIED ON SITE BEFORE FABRICATION.
- EXTERNAL UNITS COMPLY WITH THE FOLLOWING WEATHER CONDITIONS:
  WIND: 200KG/SQM
  WATER TIGHTNESS: 25KG/SQM
- ALL EXTERNAL FRAMES/ WALL JOINTS MUST BE SEALED WITH ANTI-FUNGAL EXTERIOR GRADE SILICON SEALANT
- DOOR SWINGS INDICATED ON FLOOR PLANS
- DOOR KNOBS SHALL BE 900MM ABOVE FINISHED FLOOR LEVEL

M T C C
MALDIVES TRANSPORT & CONTRACTING COMPANY PLC
SURVEY,DESIGN AND DEVELOPMENT SECTION
CONSTRUCTION AND PROJECTS MANGEMENT DEPARTMENT,
MTCC TOWER, BODU THAKURUFAANU MAGU, MALE 20181,
REPUBLIC OF MALDIVES.
PHONE: + (960) 332 6822,FAX: +(960) 333 2835
E-MAIL: design.development@mtcc.com.mv

PROJECT TITLE: MID HOSPITAL PROJECT

DRAWING TITLE: AS GIVEN

CLIENT & ADDRESS: MINISTRY OF HEALTH

PROJECT LOCATION: -

DESIGN ARCHITECT: SURVEYING, DESIGN AND DEVELOPMENT SECTION

ENGINEER: IBRAHIM THOAM

STRUCTURAL CHECKER: ABDULLA RAMEEZ

ARCHITECT: AMINATH ZOONA

ARCHITECTURAL CHECKER: IRFAN WAHEED

PAPER: A3

SCALE: AS GVN

DRAWN BY: AMINATH SAMAHA

CHECKED BY: HASSAN SHAHULAN

DATE: 19-08-2020

REV	DESCRIPTION	DATE	APPR

SHEET IDENTIFICATION NUMBER: A6.03

SHEET TITLE: 38

COPYRIGHT All plans, sketches, drawings, graphic representations and specifications prepared by the Architect(s) & Engineer(s) are instruments of service. The copyright and ownership of both the design and these instruments of service belong to the Architect(s) & Engineer(s) and may not be used for any other project, or sold, or offered for sale by any party other than the Architect/Engineer unless the Architect/Engineer has given written consent. Copies of the documents submitted to the client prepared by the Architect/Engineer maybe used as they were intended; once; and on the same site and project.

LABEL	SD1	SD2	SD3
	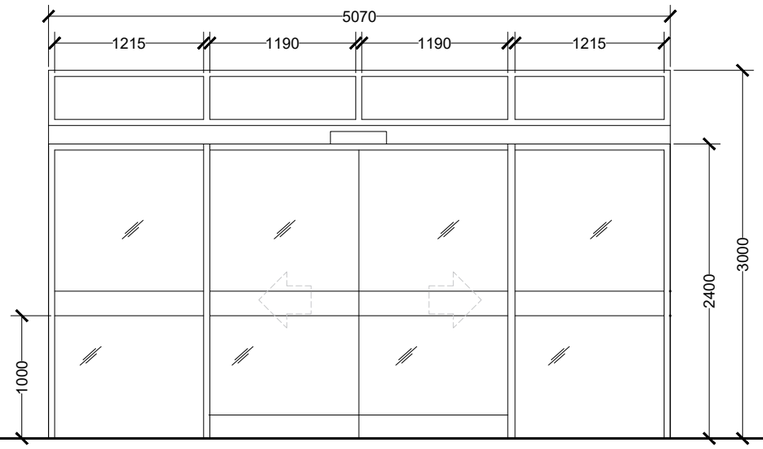	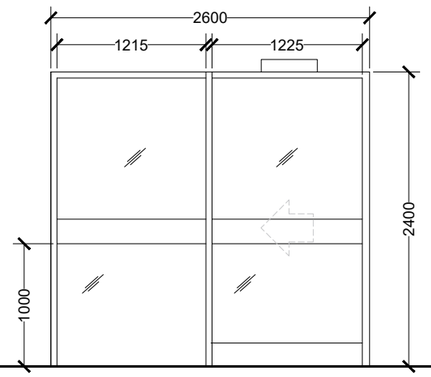	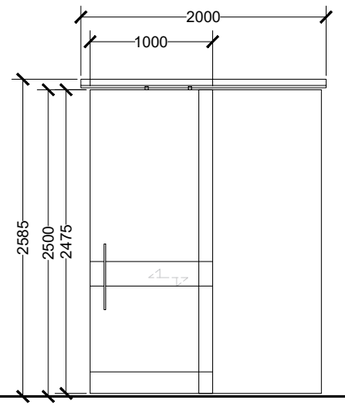
DESCRIPTION	TEMPERED GLASS DOOR	TEMPERED GLASS DOOR	SLIDING DOOR
DOOR FRAME	POWDER COATED ALUMINUM IN BLACK	POWDER COATED ALUMINUM IN BLACK	ALUMINUM TOP RAILING
DOOR PANEL	8mm TEMPERED GLASS DOOR	8mm TEMPERED GLASS DOOR	GRP DOOR PANEL
HARDWARE	AUTOMATIC DOOR SENSOR SYSTEM	AUTOMATIC DOOR SENSOR SYSTEM	TOP HUNG RAILING, DOOR STOP, HANDLE AND LOCKSET
COMMENTS	REFLECTIVE GLASS, 200mm FROSTED STICKER @1000mm	REFLECTIVE GLASS, 200mm FROSTED STICKER @1000mm	200mm STAINLESS STEEL BORDER @ BOTTOM OF DOOR AND @ 900mm
LOCATION(S)	MAIN LOBBY ENTRANCE, TRIAGE ENTRANCE	LABOUR, RADIOLOGY, INDOOR PLAY GROUND, CANTEEN, EXIT	UNIVERSAL TOILETS, FEEDING ROOMS
NO(S)	2	7	6

DOOR WINDOW SCHEDULE

SCALE 1:50

0 0.25 0.5 1 2 METERS

IMPORTANT NOTES:

- FG - FIXED GLASS
- ALL MEASUREMENTS TO BE CHECKED AND VERIFIED ON SITE BEFORE FABRICATION.
- EXTERNAL UNITS COMPLY WITH THE FOLLOWING WEATHER CONDITIONS:
  WIND: 200KG/SQM
  WATER TIGHTNESS: 25KG/SQM
- ALL EXTERNAL FRAMES/ WALL JOINTS MUST BE SEALED WITH ANTI-FUNGAL EXTERIOR GRADE SILICON SEALANT
- DOOR SWINGS INDICATED ON FLOOR PLANS
- DOOR KNOBS SHALL BE 900MM ABOVE FINISHED FLOOR LEVEL

M T C C
MALDIVES TRANSPORT & CONTRACTING COMPANY PLC
SURVEY,DESIGN AND DEVELOPMENT SECTION
CONSTRUCTION AND PROJECTS MANGEMENT DEPARTMENT,
MTCC TOWER, BODU THAKURUFAANU MAGU, MALE' 20181,
REPUBLIC OF MALDIVES,
PHONE:+ (960) 332 6822,FAX: + (960) 333 2835
E-MAIL: design.development@mtcc.com.mv

PROJECT TITLE: MID HOSPITAL PROJECT

DRAWING TITLE: AS GIVEN

CLIENT & ADDRESS: MINISTRY OF HEALTH

PROJECT LOCATION: -

DESIGN ARCHITECT: SURVEYING, DESIGN AND DEVELOPMENT SECTION

ENGINEER: IBRAHIM THOAM

STRUCTURAL CHECKER: ABDULLA RAMEEZ

ARCHITECT: AMINATH ZOONA

ARCHITECTURAL CHECKER: IRFAN WAHEED

PAPER: A3

SCALE: AS GVN

DRAWN BY: AMINATH SAMAHA

CHECKED BY: HASSAN SHAHULAN

DATE: 19-08-2020

REV	DESCRIPTION	DATE	APPR

SHEET IDENTIFICATION NUMBER: A6.04

SHEET TITLE: 39

COPYRIGHT All plans, sketches, drawings, graphic representations and specifications prepared by the Architect(s) & Engineer(s) are instruments of service. The copyright and ownership of both the design and these instruments of service belong to the Architect(s) & Engineer(s) and may not be used for any other project, or sold, or offered for sale by any party other than the Architect/Engineer unless the Architect/Engineer has given written consent. Copies of the documents submitted to the client prepared by the Architect/Engineer maybe used as they were intended; once; and on the same site and project.

LABEL	SD4	SD5	BD1
	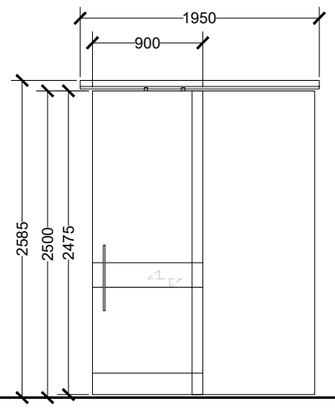	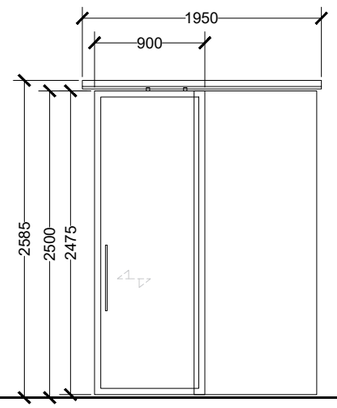	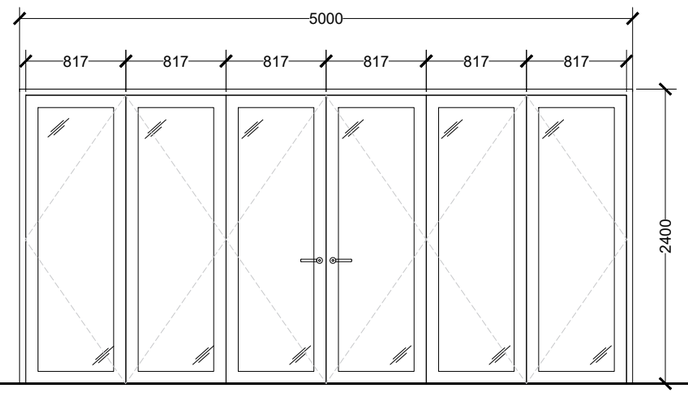
DESCRIPTION	SLIDING DOOR	SLIDING DOOR	BI-FOLDING SLIDING DOOR
DOOR FRAME	ALUMINUM TOP RAILING	ALUMINUM TOP RAILING, POWDER COATED ALUMINUM FRAME	POWDER COATED ALUMINUM FRAME IN BLACK
DOOR PANEL	GRP DOOR PANEL	GLASS DOOR, WITH POWDER COATED ALUMINUM FRAME	TEMPERED GLASS DOOR, WITH POWDER COATED ALUMINUM FRAME
HARDWARE	TOP HUNG RAILING, DOOR STOP, HANDLE AND LOCKSET	TOP HUNG RAILING, DOOR STOP, HANDLE AND LOCKSET, AUTOMATIC DOOR SENSOR SYSTEM	TOP RAILING AND BOTTOM FLOOR CONCEALED RAILING, DOOR STOP, HANDLE AND LOCKSET
COMMENTS	200mm STAINLESS STEEL BORDER @ BOTTOM OF DOOR AND @ 900mm	-	-
LOCATION(S)	NICU FEEDING ROOM AND PREPARATION ROOM	MINOR THEATER	LEADING TO OUTDOOR DECK AREA
NO(S)	2	1	2

DOOR WINDOW SCHEDULE

SCALE 1:50

0 0.25 0.5 1 2 METERS

IMPORTANT NOTES:

- FG - FIXED GLASS
- ALL MEASUREMENTS TO BE CHECKED AND VERIFIED ON SITE BEFORE FABRICATION.
- EXTERNAL UNITS COMPLY WITH THE FOLLOWING WEATHER CONDITIONS:
  WIND: 200KG/SQM
  WATER TIGHTNESS: 25KG/SQM
- ALL EXTERNAL FRAMES/ WALL JOINTS MUST BE SEALED WITH ANTI-FUNGAL EXTERIOR GRADE SILICON SEALANT
- DOOR SWINGS INDICATED ON FLOOR PLANS
- DOOR KNOBS SHALL BE 900MM ABOVE FINISHED FLOOR LEVEL

M T C C
MALDIVES TRANSPORT & CONTRACTING COMPANY PLC
SURVEY,DESIGN AND DEVELOPMENT SECTION
CONSTRUCTION AND PROJECTS MANGEMENT DEPARTMENT,
MTCC TOWER, BODU THAKURUFAANU MAGU, MALE' 20181,
REPUBLIC OF MALDIVES,
PHONE: + (960) 332 6822,FAX: + (960) 333 2835
E-MAIL: design.development@mtcc.com.mv

PROJECT TITLE: MID HOSPITAL PROJECT

DRAWING TITLE: AS GIVEN

CLIENT & ADDRESS: MINISTRY OF HEALTH

PROJECT LOCATION: -

DESIGN ARCHITECT: SURVEYING, DESIGN AND DEVELOPMENT SECTION

ENGINEER: IBRAHIM THOAM

STRUCTURAL CHECKER: ABDULLA RAMEEZ

ARCHITECT: AMINATH ZOONA

ARCHITECTURAL CHECKER: IRFAN WAHEED

PAPER: A3

SCALE: AS GVN

DRAWN BY: AMINATH SAMAHA

CHECKED BY: HASSAN SHAHULAN

DATE: 19-08-2020

REV	DESCRIPTION	DATE	APPR

SHEET IDENTIFICATION NUMBER: A6.05

SHEET TITLE: 40

COPYRIGHT All plans, sketches, drawings, graphic representations and specifications prepared by the Architect(s) & Engineer(s) are instruments of service. The copyright and ownership of both the design and these instruments of service belong to the Architect(s) & Engineer(s) and may not be used for any other project, or sold, or offered for sale by any party other than the Architect/Engineer unless the Architect/Engineer has given written consent. Copies of the documents submitted to the client prepared by the Architect/Engineer maybe used as they were intended; once; and on the same site and project.

LABEL	BD2

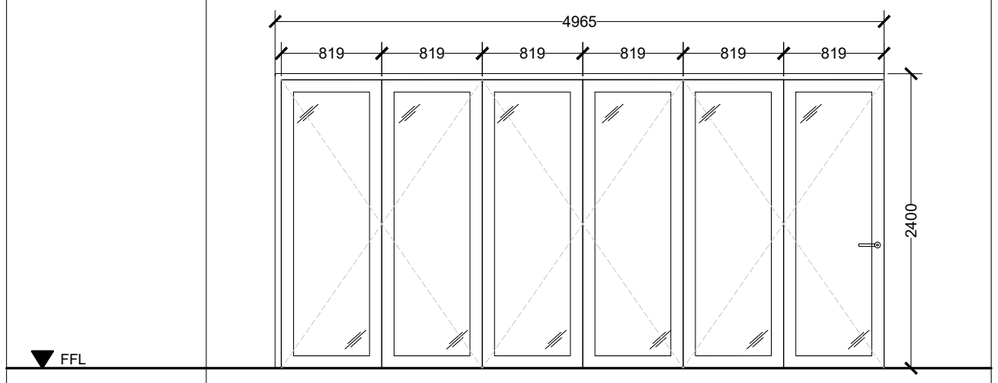

DESCRIPTION	BI-FOLDING SLIDING DOOR
DOOR FRAME	POWDER COATED ALUMINUM FRAME IN BLACK
DOOR PANEL	TEMPERED GLASS DOOR, WITH POWDER COATED ALUMINUM FRAME
HARDWARE	TOP RAILING AND BOTTOM FLOOR CONCEALED RAILING, DOOR STOP, HANDLE AND LOCKSET
COMMENTS	-
LOCATION(S)	LEADING TO OUTDOOR DECK AREA
NO(S)	2

DOOR WINDOW SCHEDULE

SCALE 1:50

0 0.25 0.5 1 2 METERS

IMPORTANT NOTES:

- FG - FIXED GLASS
- ALL MEASUREMENTS TO BE CHECKED AND VERIFIED ON SITE BEFORE FABRICATION.
- EXTERNAL UNITS COMPLY WITH THE FOLLOWING WEATHER CONDITIONS:
  WIND: 200KG/SQM
  WATER TIGHTNESS: 25KG/SQM
- ALL EXTERNAL FRAMES/ WALL JOINTS MUST BE SEALED WITH ANTI-FUNGAL EXTERIOR GRADE SILICON SEALANT
- DOOR SWINGS INDICATED ON FLOOR PLANS
- DOOR KNOBS SHALL BE 900MM ABOVE FINISHED FLOOR LEVEL

M T C C
MALDIVES TRANSPORT & CONTRACTING COMPANY PLC
SURVEY,DESIGN AND DEVELOPMENT SECTION
CONSTRUCTION AND PROJECTS MANGEMENT DEPARTMENT,
MTCC TOWER, BODU THAKURUFAANU MAGU, MALE 20181,
REPUBLIC OF MALDIVES.
PHONE :+ (960) 332 6822,FAX: +(960) 333 2835
E-MAIL: design.development@mtcc.com.mv

PROJECT TITLE: MID HOSPITAL PROJECT

DRAWING TITLE: AS GIVEN

CLIENT & ADDRESS: MINISTRY OF HEALTH

PROJECT LOCATION: -

DESIGN ARCHITECT: SURVEYING, DESIGN AND DEVELOPMENT SECTION

ENGINEER: IBRAHIM THOAM

STRUCTURAL CHECKER: ABDULLA RAMEEZ

ARCHITECT: AMINATH ZOONA

ARCHITECTURAL CHECKER: IRFAN WAHEED

PAPER: A3

SCALE: AS GVN

DRAWN BY: AMINATH SAMAHA

CHECKED BY: HASSAN SHAHULAN

DATE: 19-08-2020

REV	DESCRIPTION	DATE	APPR

SHEET IDENTIFICATION NUMBER: A6.06

SHEET TITLE: 41

COPYRIGHT All plans, sketches, drawings, graphic representations and specifications prepared by the Architect(s) & Engineer(s) are instruments of service. The copyright and ownership of both the design and these instruments of service belong to the Architect(s) & Engineer(s) and may not be used for any other project, or sold, or offered for sale by any party other than the Architect/Engineer unless the Architect/Engineer has given written consent. Copies of the documents submitted to the client prepared by the Architect/Engineer maybe used as they were intended; once; and on the same site and project.

LABEL	W1	W2	W3	W4	W5
ELEVATION VIEW	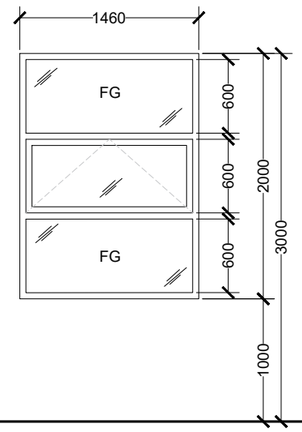	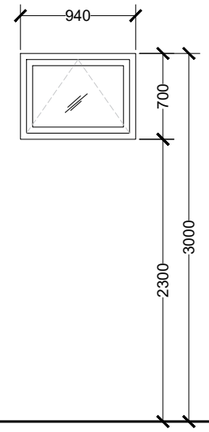	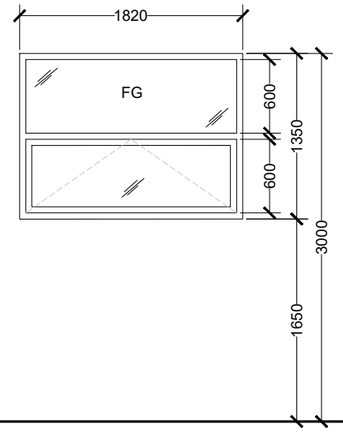	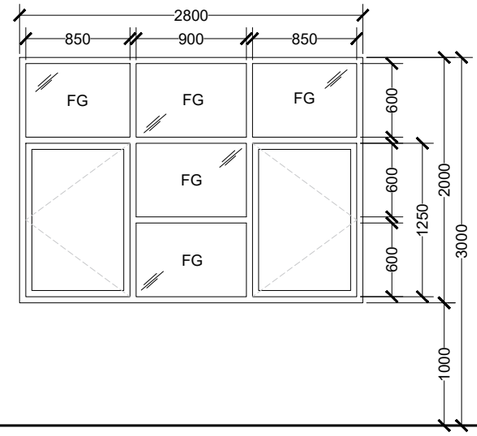	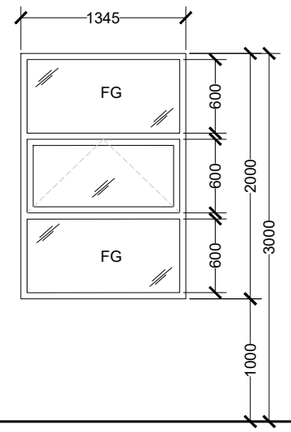
DESCRIPTION	TOP HUNG WINDOW WITH FIXED GLASS	TOP HUNG WINDOW	TOP HINGE WINDOW WITH FIXED GLASS	SIDE HINGE WINDOW WITH FIXED GLASS	TOP HUNG WINDOW WITH FIXED GLASS
DOOR FRAME	POWDER COATED ALUMINUM IN BLACK	POWDER COATED ALUMINUM IN BLACK	POWDER COATED ALUMINUM IN BLACK	POWDER COATED ALUMINUM IN BLACK	POWDER COATED ALUMINUM IN BLACK
DOOR PANEL	LOW-E TEMPERED GLASS	LOW-E TEMPERED GLASS	LOW-E TEMPERED GLASS	LOW-E TEMPERED GLASS	LOW-E TEMPERED GLASS
HARDWARE	TOP HINGE AND LOCKSET	TOP HINGE AND LOCKSET	TOP HINGE AND LOCKSET	SIDE HINGE AND LOCKSET	TOP HINGE AND LOCKSET
COMMENTS	REFLECTIVE GLASS	REFLECTIVE GLASS	REFLECTIVE GLASS	REFLECTIVE GLASS	REFLECTIVE GLASS
LOCATION(S)	PHARMACY, TREATMENT ROOM, GENERAL CONSULTATION, ISOLATION ROOM, MEDICINE STORE AND DIRTY UTILITY	TOILETS, RESTROOM, PREPARATION ROOM, PHARMACY AND TREATMENT ROOM	FEEDING ROOM, DOCTORS LOUNGE, CLEAN STORE, INJECTION ROOM, TREATMENT ROOM ,CONSULTATION ROOMS,PROCEDURE ROOM, BLOOD BANK, UTILITY ROOM, WARD, MEDICINE STORE.	DELIVERY ROOM, LABOUR, TRIAGE, OFFICE, KITCHEN, MICRO-BIOLOGY, DOCTORS LOUNGE, WARDS, NURSE LOUNGE, PRIVATE WARD	PHARMACY, TREATMENT ROOM, GENERAL CONSULTATION, ISOLATION ROOM, MEDICINE STORE AND DIRTY UTILITY
NO(S)	10	21	29	11	5

DOOR WINDOW SCHEDULE

SCALE 1:50

0 0.25 0.5 1 2 METERS

IMPORTANT NOTES:

- FG - FIXED GLASS
- ALL MEASUREMENTS TO BE CHECKED AND VERIFIED ON SITE BEFORE FABRICATION.
- EXTERNAL UNITS COMPLY WITH THE FOLLOWING WEATHER CONDITIONS:
  WIND: 200KG/SQM
  WATER TIGHTNESS: 25KG/SQM
- ALL EXTERNAL FRAMES/ WALL JOINTS MUST BE SEALED WITH ANTI-FUNGAL EXTERIOR GRADE SILICON SEALANT
- DOOR SWINGS INDICATED ON FLOOR PLANS
- DOOR KNOBS SHALL BE 900MM ABOVE FINISHED FLOOR LEVEL

M T C C
MALDIVES TRANSPORT & CONTRACTING COMPANY PLC
SURVEY,DESIGN AND DEVELOPMENT SECTION
CONSTRUCTION AND PROJECTS MANGEMENT DEPARTMENT,
MTCC TOWER, BODU THAKURUFAANU MAGU, MALE 20181,
REPUBLIC OF MALDIVES,
PHONE:+ (960) 332 6822,FAX: +(960) 333 2835
E-MAIL: design.development@mtcc.com.mv

PROJECT TITLE: MID HOSPITAL PROJECT

DRAWING TITLE: AS GIVEN

CLIENT & ADDRESS: MINISTRY OF HEALTH

PROJECT LOCATION: -

DESIGN ARCHITECT: SURVEYING, DESIGN AND DEVELOPMENT SECTION

ENGINEER: IBRAHIM THOAM

STRUCTURAL CHECKER: ABDULLA RAMEEZ

ARCHITECT: AMINATH ZOONA

ARCHITECTURAL CHECKER: IRFAN WAHEED

PAPER: A3

SCALE: AS GVN

DRAWN BY: AMINATH SAMAHA

CHECKED BY: HASSAN SHAHULAN

DATE: 19-08-2020

REV	DESCRIPTION	DATE	APPR

SHEET IDENTIFICATION NUMBER: A6.07

SHEET TITLE: 42

COPYRIGHT All plans, sketches, drawings, graphic representations and specifications prepared by the Architect(s) & Engineer(s) are instruments of service. The copyright and ownership of both the design and these instruments of service belong to the Architect(s) & Engineer(s) and may not be used for any other project, or sold, or offered for sale by any party other than the Architect/Engineer unless the Architect/Engineer has given written consent. Copies of the documents submitted to the client prepared by the Architect/Engineer maybe used as they were intended; once; and on the same site and project.

LABEL	W6	W7	FG1	FG2
ELEVATION VIEW	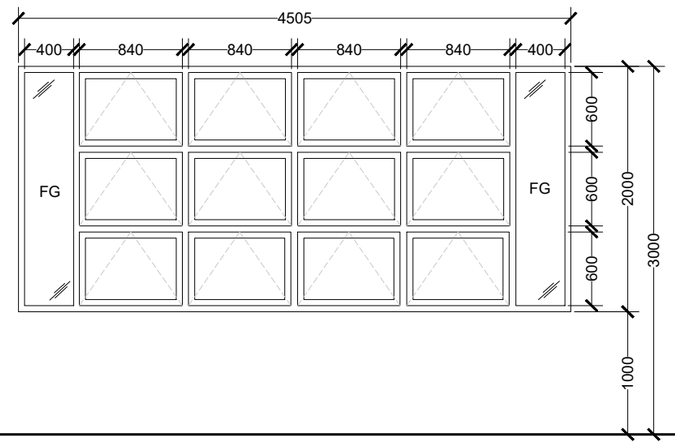	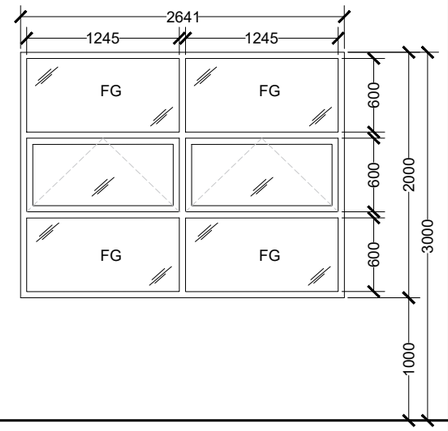	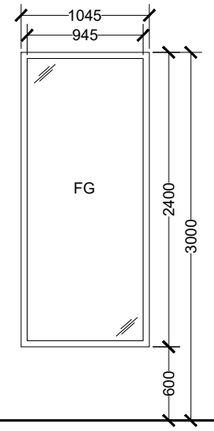	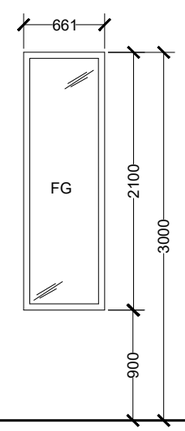
DESCRIPTION	TOP HUNG WINDOW WITH FIXED GLASS	DOUBLE TOP HUNG WINDOW WITH FIXED GLASS	TYPICAL FIXED GLASS 1	FIXED GLASS 2
DOOR FRAME	POWDER COATED ALUMINUM IN BLACK	POWDER COATED ALUMINUM IN BLACK	POWDER COATED ALUMINUM IN BLACK	POWDER COATED ALUMINUM IN BLACK
DOOR PANEL	LOW-E TEMPERED GLASS	LOW-E TEMPERED GLASS	LOW-E TEMPERED GLASS	TEMPERED GLASS
HARDWARE	TOP HINGE AND LOCKSET	TOP HINGE AND LOCKSET	-	-
COMMENTS	REFLECTIVE GLASS	REFLECTIVE GLASS	REFLECTIVE GLASS	TEMPERED CLEAR GLASS
LOCATION(S)	CANTEEN KITCHEN, LABOUR, LABORATORY	LABORATORY, PRIVATE WARD	TRIAGE, OPD AREA, OFFICE, PRIVATE WARD	LABOUR
NO(S)	5	2	15	5

DOOR WINDOW SCHEDULE

SCALE 1:50

0 0.25 0.5 1 2 METERS

IMPORTANT NOTES:

- FG - FIXED GLASS
- ALL MEASUREMENTS TO BE CHECKED AND VERIFIED ON SITE BEFORE FABRICATION.
- EXTERNAL UNITS COMPLY WITH THE FOLLOWING WEATHER CONDITIONS:
  WIND: 200KG/SQM
  WATER TIGHTNESS: 25KG/SQM
- ALL EXTERNAL FRAMES/ WALL JOINTS MUST BE SEALED WITH ANTI-FUNGAL EXTERIOR GRADE SILICON SEALANT
- DOOR SWINGS INDICATED ON FLOOR PLANS
- DOOR KNOBS SHALL BE 900MM ABOVE FINISHED FLOOR LEVEL

M T C C
MALDIVES TRANSPORT & CONTRACTING COMPANY PLC
SURVEY,DESIGN AND DEVELOPMENT SECTION
CONSTRUCTION AND PROJECTS MANGEMENT DEPARTMENT,
MTCC TOWER, BODU THAKURUFAANU MAGU, MALE' 20181,
REPUBLIC OF MALDIVES,
PHONE: + (960) 332 6822,FAX: + (960) 333 2835
E-MAIL: design.development@mtcc.com.mv

PROJECT TITLE: MID HOSPITAL PROJECT

DRAWING TITLE: AS GIVEN

CLIENT & ADDRESS: MINISTRY OF HEALTH

PROJECT LOCATION: -

DESIGN ARCHITECT: SURVEYING, DESIGN AND DEVELOPMENT SECTION

ENGINEER: IBRAHIM THOAM

STRUCTURAL CHECKER: ABDULLA RAMEEZ

ARCHITECT: AMINATH ZOONA

ARCHITECTURAL CHECKER: IRFAN WAHEED

PAPER: A3

SCALE: AS GVN

DRAWN BY: AMINATH SAMAHA

CHECKED BY: HASSAN SHAHULAN

DATE: 19-08-2020

REV	DESCRIPTION	DATE	APPR

SHEET IDENTIFICATION NUMBER: A6.08

SHEET TITLE: 43

COPYRIGHT All plans, sketches, drawings, graphic representations and specifications prepared by the Architect(s) & Engineer(s) are instruments of service. The copyright and ownership of both the design and these instruments of service belong to the Architect(s) & Engineer(s) and may not be used for any other project, or sold, or offered for sale by any party other than the Architect/Engineer unless the Architect/Engineer has given written consent. Copies of the documents submitted to the client prepared by the Architect/Engineer maybe used as they were intended; once; and on the same site and project.

LABEL	FG3	FG3A	FG4	FG5
ELEVATION VIEW	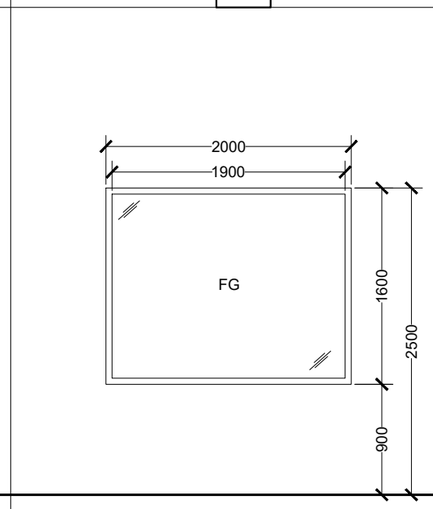	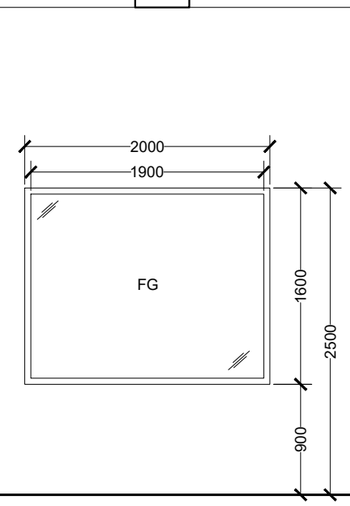	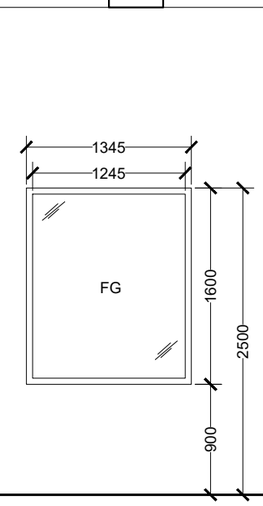	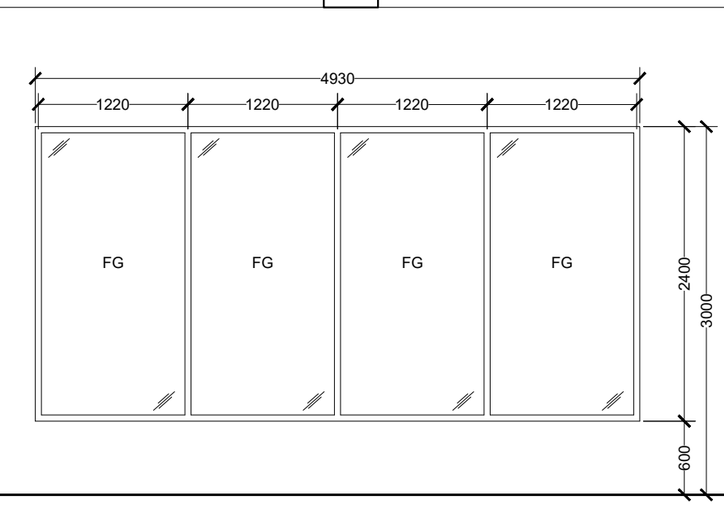
DESCRIPTION	FIXED GLASS 3	FIXED GLASS 3A	FIXED GLASS 4	FIXED GLASS SET 5
DOOR FRAME	POWDER COATED ALUMINUM IN BLACK	LEAD LINED WINDOW FRAME	POWDER COATED ALUMINUM IN BLACK	POWDER COATED ALUMINUM IN BLACK
DOOR PANEL	TEMPERED GLASS	LEADED GLASS	TEMPERED GLASS	LOW-E TEMPERED GLASS
HARDWARE	-	-	-	-
COMMENTS	TEMPERED CLEAR GLASS	LEADED GLASS	TEMPERED CLEAR GLASS	REFLECTIVE GLASS
LOCATION(S)	ISOLATION ROOM	X-RAY ROOM	DOCTORS LOUNGE AND REST ROOM	MAIN LOBBY ENTRANCE AREA
NO(S)	3	1	2	4

DOOR WINDOW SCHEDULE

SCALE 1:50

0 0.25 0.5 1 2 METERS

IMPORTANT NOTES:

- FG - FIXED GLASS
- ALL MEASUREMENTS TO BE CHECKED AND VERIFIED ON SITE BEFORE FABRICATION.
- EXTERNAL UNITS COMPLY WITH THE FOLLOWING WEATHER CONDITIONS:
  WIND: 200KG/SQM
  WATER TIGHTNESS: 25KG/SQM
- ALL EXTERNAL FRAMES/ WALL JOINTS MUST BE SEALED WITH ANTI-FUNGAL EXTERIOR GRADE SILICON SEALANT
- DOOR SWINGS INDICATED ON FLOOR PLANS
- DOOR KNOBS SHALL BE 900MM ABOVE FINISHED FLOOR LEVEL

M T C C
MALDIVES TRANSPORT & CONTRACTING COMPANY PLC
SURVEY,DESIGN AND DEVELOPMENT SECTION
CONSTRUCTION AND PROJECTS MANGEMENT DEPARTMENT,
MTCC TOWER, BODU THAKURUFAANU MAGU, MALÉ 20181,
REPUBLIC OF MALDIVES,
PHONE:- (960) 332 6822,FAX: +(960) 333 2835
E-MAIL: design.development@mtcc.com.mv

PROJECT TITLE: MID HOSPITAL PROJECT

DRAWING TITLE: AS GIVEN

CLIENT & ADDRESS: MINISTRY OF HEALTH

PROJECT LOCATION: -

DESIGN ARCHITECT: SURVEYING, DESIGN AND DEVELOPMENT SECTION

ENGINEER: IBRAHIM THOAM

STRUCTURAL CHECKER: ABDULLA RAMEEZ

ARCHITECT: AMINATH ZOONA

ARCHITECTURAL CHECKER: IRFAN WAHEED

PAPER: A3

SCALE: AS GVN

DRAWN BY: AMINATH SAMAHA

CHECKED BY: HASSAN SHAHULAN

DATE: 19-08-2020

REV	DESCRIPTION	DATE	APPR

SHEET IDENTIFICATION NUMBER: A6.09

SHEET TITLE: 44

COPYRIGHT All plans, sketches, drawings, graphic representations and specifications prepared by the Architect(s) & Engineer(s) are instruments of service. The copyright and ownership of both the design and these instruments of service belong to the Architect(s) & Engineer(s) and may not be used for any other project, or sold, or offered for sale by any party other than the Architect/Engineer unless the Architect/Engineer has given written consent. Copies of the documents submitted to the client prepared by the Architect/Engineer maybe used as they were intended; once; and on the same site and project.

LABEL	FG6	FG7
ELEVATION VIEW	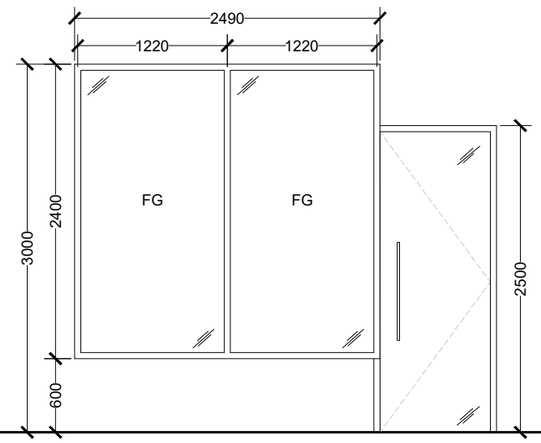	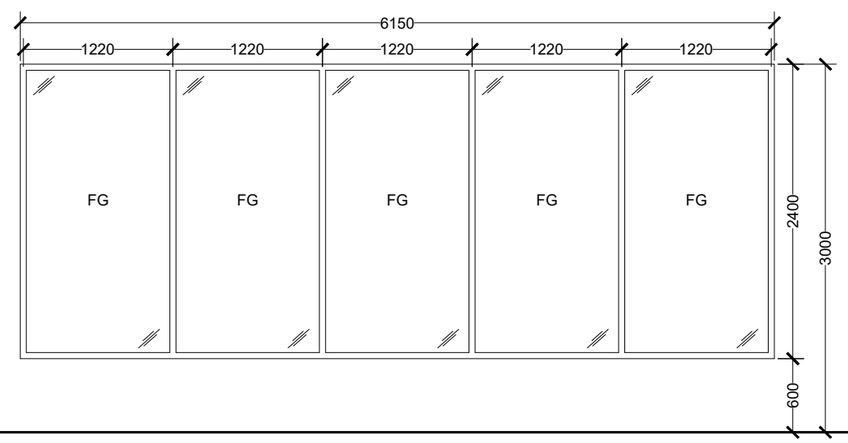
DESCRIPTION	FIXED GLASS SET 5	FIXED GLASS SET 7
DOOR FRAME	POWDER COATED ALUMINUM IN BLACK	POWDER COATED ALUMINUM IN BLACK
DOOR PANEL	LOW-E TEMPERED GLASS	LOW-E TEMPERED GLASS
HARDWARE	-	-
COMMENTS	REFLECTIVE GLASS, FIXED GLASS FRAMED TOGETHER WITH DOOR 9	REFLECTIVE GLASS
LOCATION(S)	OPEN AREA	OPEN AREA
NO(S)	1	1

DOOR WINDOW SCHEDULE

SCALE 1:50

0 0.25 0.5 1 2 METERS

IMPORTANT NOTES:

- FG - FIXED GLASS
- ALL MEASUREMENTS TO BE CHECKED AND VERIFIED ON SITE BEFORE FABRICATION.
- EXTERNAL UNITS COMPLY WITH THE FOLLOWING WEATHER CONDITIONS:
  WIND: 200KG/SQM
  WATER TIGHTNESS: 25KG/SQM
- ALL EXTERNAL FRAMES/ WALL JOINTS MUST BE SEALED WITH ANTI-FUNGAL EXTERIOR GRADE SILICON SEALANT
- DOOR SWINGS INDICATED ON FLOOR PLANS
- DOOR KNOBS SHALL BE 900MM ABOVE FINISHED FLOOR LEVEL

M T C C
MALDIVES TRANSPORT & CONTRACTING COMPANY PLC
SURVEY,DESIGN AND DEVELOPMENT SECTION
CONSTRUCTION AND PROJECTS MANGEMENT DEPARTMENT,
MTCC TOWER, BODU THAKURUFAANU MAGU, MALE 20181,
REPUBLIC OF MALDIVES.
PHONE:+ (960) 332 6822,FAX: +(960) 333 2835
E-MAIL: design.development@mtcc.com.mv

PROJECT TITLE: MID HOSPITAL PROJECT

DRAWING TITLE: AS GIVEN

CLIENT & ADDRESS: MINISTRY OF HEALTH

PROJECT LOCATION: -

DESIGN ARCHITECT: SURVEYING, DESIGN AND DEVELOPMENT SECTION

ENGINEER: IBRAHIM THOAM

STRUCTURAL CHECKER: ABDULLA RAMEEZ

ARCHITECT: AMINATH ZOONA

ARCHITECTURAL CHECKER: IRFAN WAHEED

PAPER: A3

SCALE: AS GVN

DRAWN BY: AMINATH SAMAHA

CHECKED BY: HASSAN SHAHULAN

DATE: 19-08-2020

REV	DESCRIPTION	DATE	APPR

SHEET IDENTIFICATION NUMBER: A6.10

SHEET TITLE: 45

COPYRIGHT All plans, sketches, drawings, graphic representations and specifications prepared by the Architect(s) & Engineer(s) are instruments of service. The copyright and ownership of both the design and these instruments of service belong to the Architect(s) & Engineer(s) and may not be used for any other project, or sold, or offered for sale by any party other than the Architect/Engineer unless the Architect/Engineer has given written consent. Copies of the documents submitted to the client prepared by the Architect/Engineer maybe used as they were intended; once; and on the same site and project.

LABEL	FG8	FG9
ELEVATION VIEW	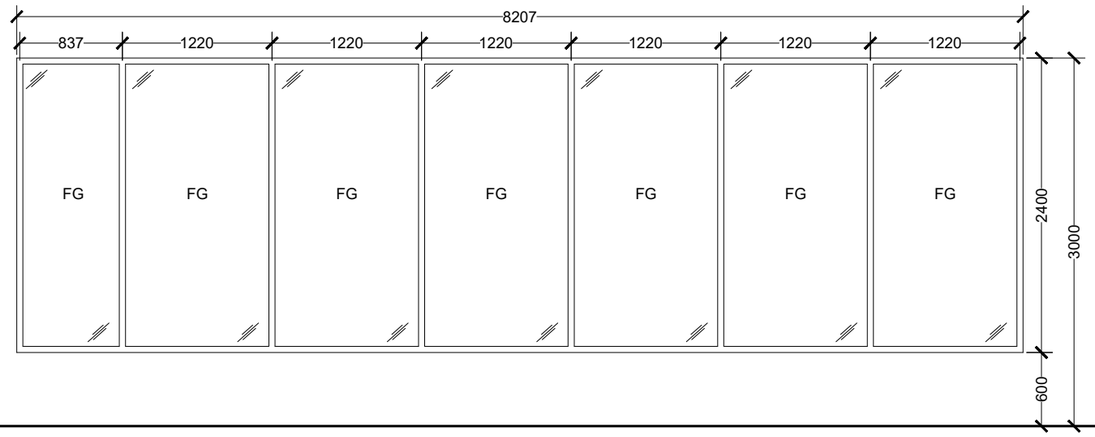	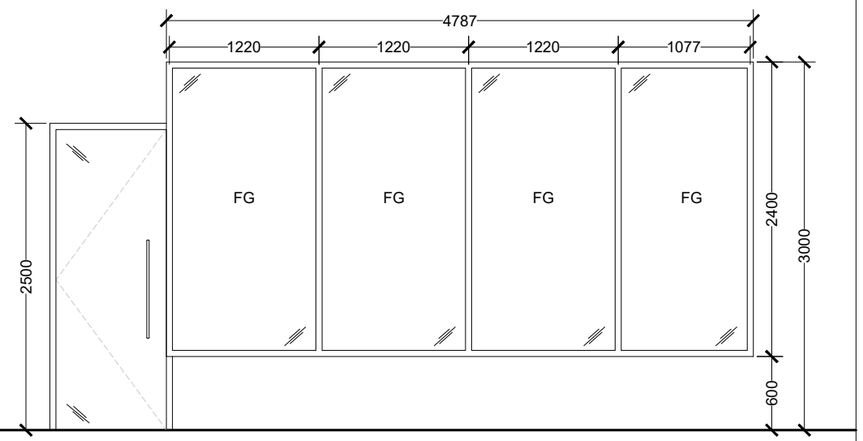
DESCRIPTION	FIXED GLASS SET 8	FIXED GLASS SET 4
DOOR FRAME	POWDER COATED ALUMINUM IN BLACK	POWDER COATED ALUMINUM IN BLACK
DOOR PANEL	LOW-E TEMPERED GLASS	LOW-E TEMPERED GLASS
HARDWARE	-	-
COMMENTS	REFLECTIVE GLASS	REFLECTIVE GLASS
LOCATION(S)	OPEN AREA	MAIN LOBBY ENTRANCE AREA
NO(S)	1	1

DOOR WINDOW SCHEDULE

SCALE 1:50

0 0.25 0.5 1 2 METERS

IMPORTANT NOTES:

- FG - FIXED GLASS
- ALL MEASUREMENTS TO BE CHECKED AND VERIFIED ON SITE BEFORE FABRICATION.
- EXTERNAL UNITS COMPLY WITH THE FOLLOWING WEATHER CONDITIONS:
  WIND: 200KG/SQM
  WATER TIGHTNESS: 25KG/SQM
- ALL EXTERNAL FRAMES/ WALL JOINTS MUST BE SEALED WITH ANTI-FUNGAL EXTERIOR GRADE SILICON SEALANT
- DOOR SWINGS INDICATED ON FLOOR PLANS
- DOOR KNOBS SHALL BE 900MM ABOVE FINISHED FLOOR LEVEL

M T C C
MALDIVES TRANSPORT & CONTRACTING COMPANY PLC
SURVEY,DESIGN AND DEVELOPMENT SECTION
CONSTRUCTION AND PROJECTS MANGEMENT DEPARTMENT,
MTCC TOWER, BODU THAKURUFAANU MAGU, MALE' 20181,
REPUBLIC OF MALDIVES.
PHONE :+ (960) 332 6822,FAX: +(960) 333 2835
E-MAIL: design.development@mtcc.com.mv

PROJECT TITLE: MID HOSPITAL PROJECT

DRAWING TITLE: AS GIVEN

CLIENT & ADDRESS: MINISTRY OF HEALTH

PROJECT LOCATION: -

DESIGN ARCHITECT: SURVEYING, DESIGN AND DEVELOPMENT SECTION

ENGINEER: IBRAHIM THOAM

STRUCTURAL CHECKER: ABDULLA RAMEEZ

ARCHITECT: AMINATH ZOONA

ARCHITECTURAL CHECKER: IRFAN WAHEED

PAPER: A3

SCALE: AS GVN

DRAWN BY: AMINATH SAMAHA

CHECKED BY: HASSAN SHAHULAN

DATE: 19-08-2020

REV	DESCRIPTION	DATE	APPR

SHEET IDENTIFICATION NUMBER: A6.11

SHEET TITLE: 46

COPYRIGHT All plans, sketches, drawings, graphic representations and specifications prepared by the Architect(s) & Engineer(s) are instruments of service. The copyright and ownership of both the design and these instruments of service belong to the Architect(s) & Engineer(s) and may not be used for any other project, or sold, or offered for sale by any party other than the Architect/Engineer unless the Architect/Engineer has given written consent. Copies of the documents submitted to the client prepared by the Architect/Engineer maybe used as they were intended; once; and on the same site and project.

LABEL	FG10	FG11
PLAN VIEW	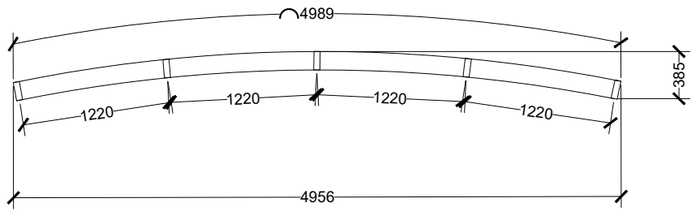	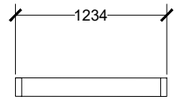
ELEVATION VIEW	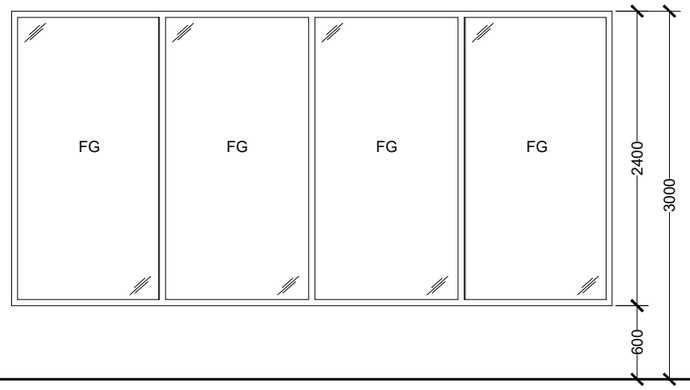	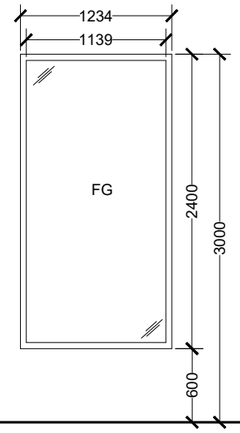
DESCRIPTION	CURVED FIXED GLASS SET 10	FIXED GLASS SET 11
DOOR FRAME	POWDER COATED ALUMINUM IN BLACK	POWDER COATED ALUMINUM IN BLACK
DOOR PANEL	LOW-E TEMPERED GLASS	LOW-E TEMPERED GLASS
HARDWARE	-	-
COMMENTS	REFLECTIVE GLASS	REFLECTIVE GLASS, FIXED GLASS FRAMED TOGETHER WITH SLIDING DOOR 1
LOCATION(S)	MAIN LOBBY ENTRANCE AREA	MAIN LOBBY ENTRANCE AREA
NO(S)	4	1

IMPORTANT NOTES:

- FG - FIXED GLASS
- ALL MEASUREMENTS TO BE CHECKED AND VERIFIED ON SITE BEFORE FABRICATION.
- EXTERNAL UNITS COMPLY WITH THE FOLLOWING WEATHER CONDITIONS:
  WIND: 200KG/SQM
  WATER TIGHTNESS: 25KG/SQM
- ALL EXTERNAL FRAMES/ WALL JOINTS MUST BE SEALED WITH ANTI-FUNGAL EXTERIOR GRADE SILICON SEALANT
- DOOR SWINGS INDICATED ON FLOOR PLANS
- DOOR KNOBS SHALL BE 900MM ABOVE FINISHED FLOOR LEVEL

DOOR WINDOW SCHEDULE

SCALE 1:50

0 0.25 0.5 1 2 METERS

M T C C
MALDIVES TRANSPORT & CONTRACTING COMPANY PLC
SURVEY,DESIGN AND DEVELOPMENT SECTION
CONSTRUCTION AND PROJECTS MANGEMENT DEPARTMENT,
MTCC TOWER, BODU THAKURUFAANU MAGU, MALE' 20181,
REPUBLIC OF MALDIVES.
PHONE:+ (960) 332 6822,FAX: +(960) 333 2835
E-MAIL: design.development@mtcc.com.mv

PROJECT TITLE	MID HOSPITAL PROJECT
DRAWING TITLE	AS GIVEN
CLIENT & ADDRESS	MINISTRY OF HEALTH
PROJECT LOCATION	-
DESIGN ARCHITECT:	SURVEYING, DESIGN AND DEVELOPMENT SECTION
ENGINEER:	IBRAHIM THOAM
STRUCTURAL CHECKER:	ABDULLA RAMEEZ
ARCHITECT:	AMINATH ZOONA
ARCHITECTURAL CHECKER:	IRFAN WAHEED
PAPER	A3
SCALE	AS GVN
DRAWN BY:	AMINATH SAMAHA
CHECKED BY:	HASSAN SHAHULAN
DATE	19-08-2020

REV	DESCRIPTION	DATE	APPR

SHEET IDENTIFICATION NUMBER

A6.12

SHEET TITLE

47

COPYRIGHT All plans, sketches, drawings, graphic representations and specifications prepared by the Architect(s) & Engineer(s) are instruments of service. The copyright and ownership of both the design and these instruments of service belong to the Architect(s) & Engineer(s) and may not be used for any other project, or sold, or offered for sale by any party other than the Architect/Engineer unless the Architect/Engineer has given written consent. Copies of the documents submitted to the client prepared by the Architect/Engineer maybe used as they were intended; once; and on the same site and project.

LABEL	FG12

PLAN VIEW

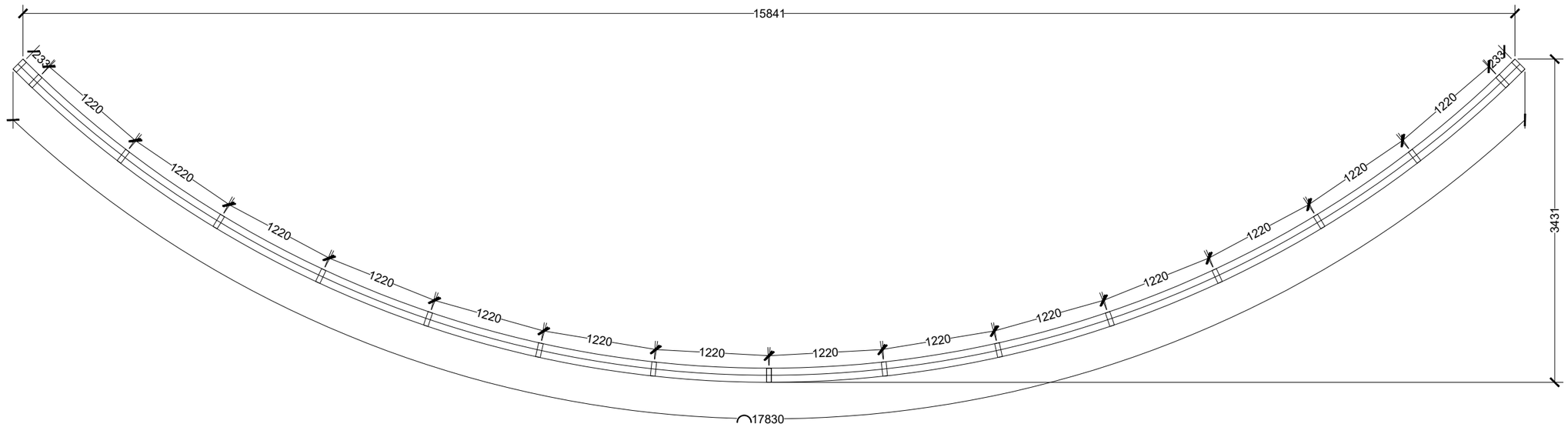

ELEVATION VIEW

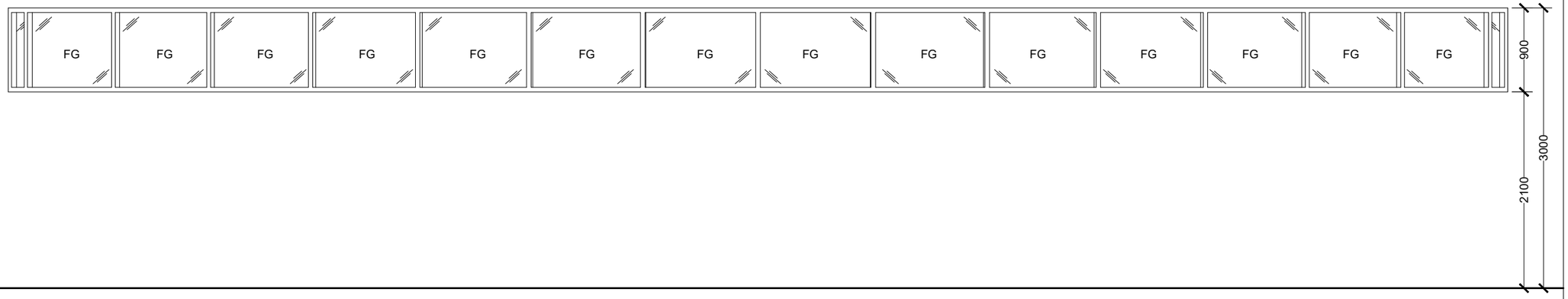

DESCRIPTION	CURVED FIXED GLASS SET 12
DOOR FRAME	POWDER COATED ALUMINUM IN BLACK
DOOR PANEL	LOW-E TEMPERED GLASS
HARDWARE	-
COMMENTS	REFLECTIVE GLASS
LOCATION(S)	ER
NO(S)	1

DOOR WINDOW SCHEDULE

SCALE 1:50

0 0.25 0.5 1 2 METERS

M T C C
MALDIVES TRANSPORT & CONTRACTING COMPANY PLC
SURVEY,DESIGN AND DEVELOPMENT SECTION
CONSTRUCTION AND PROJECTS MANGEMENT DEPARTMENT,
MTCC TOWER, BODU THAKURUFAANU MAGU, MALE 20181,
REPUBLIC OF MALDIVES,
PHONE:+ (960) 332 6822,FAX: +(960) 333 2835
E-MAIL: design.development@mtcc.com.mv

PROJECT TITLE	MID HOSPITAL PROJECT
DRAWING TITLE	AS GIVEN
CLIENT & ADDRESS	MINISTRY OF HEALTH
PROJECT LOCATION	-
DESIGN ARCHITECT:	SURVEYING, DESIGN AND DEVELOPMENT SECTION
ENGINEER:	IBRAHIM THOAM
STRUCTURAL CHECKER:	ABDULLA RAMEEZ
ARCHITECT:	AMINATH ZOONA
ARCHITECTURAL CHECKER:	IRFAN WAHEED
PAPER	A3
SCALE	AS GVN
DRAWN BY:	AMINATH SAMAHA
CHECKED BY:	HASSAN SHAHULAN
DATE	19-08-2020

REV	DESCRIPTION	DATE	APPR

SHEET IDENTIFICATION NUMBER

A6.13

SHEET TITLE

48

COPYRIGHT All plans, sketches, drawings, graphic representations and specifications prepared by the Architect(s) & Engineer(s) are instruments of service. The copyright and ownership of both the design and these instruments of service belong to the Architect(s) & Engineer(s) and may not be used for any other project, or sold, or offered for sale by any party other than the Architect/Engineer unless the Architect/Engineer has given written consent. Copies of the documents submitted to the client prepared by the Architect/Engineer maybe used as they were intended; once; and on the same site and project.

LABEL	FG13

PLAN VIEW

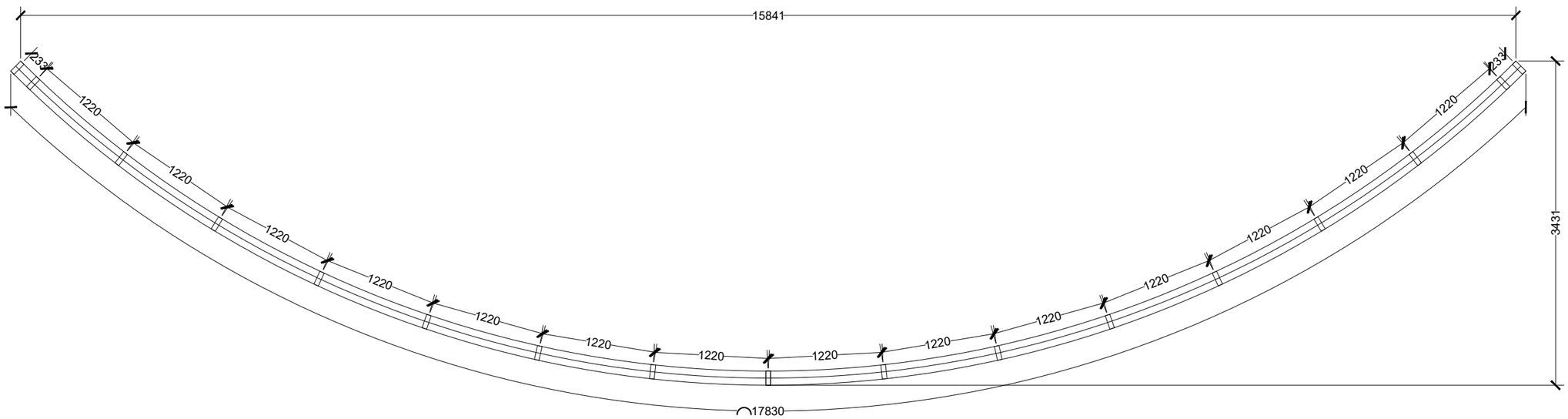

ELEVATION VIEW

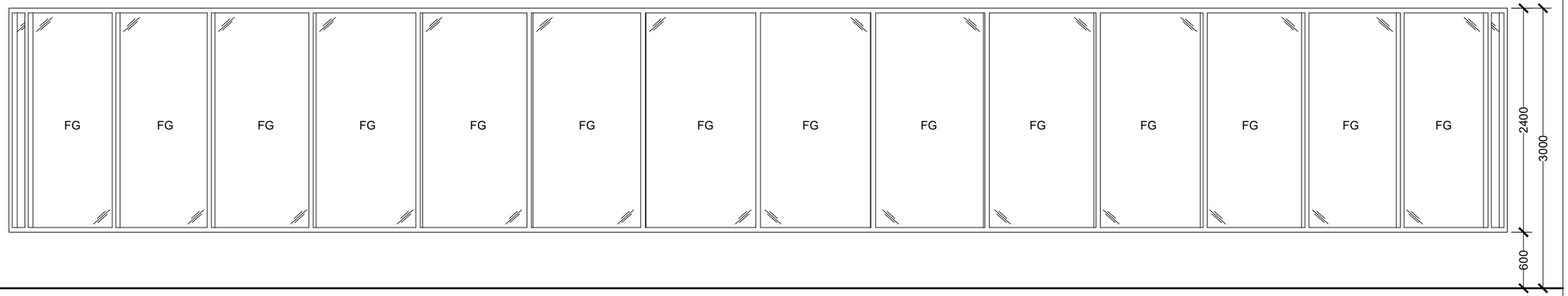

DESCRIPTION	CURVED FIXED GLASS SET 13
DOOR FRAME	POWDER COATED ALUMINUM IN BLACK
DOOR PANEL	LOW-E TEMPERED GLASS
HARDWARE	-
COMMENTS	REFLECTIVE GLASS
LOCATION(S)	ER
NO(S)	1

DOOR WINDOW SCHEDULE

SCALE 1:50

0 0.25 0.5 1 2 METERS

M T C C
MALDIVES TRANSPORT & CONTRACTING COMPANY PLC
SURVEY,DESIGN AND DEVELOPMENT SECTION
CONSTRUCTION AND PROJECTS MANGEMENT DEPARTMENT,
MTCC TOWER, BODU THAKURUFAANU MAGU, MALÉ 20181,
REPUBLIC OF MALDIVES.
PHONE:+(960) 332 6822,FAX: +(960) 333 2835
E-MAIL: design.development@mtcc.com.mv

PROJECT TITLE	MID HOSPITAL PROJECT
DRAWING TITLE	AS GIVEN
CLIENT & ADDRESS	MINISTRY OF HEALTH
PROJECT LOCATION	-
DESIGN ARCHITECT:	SURVEYING, DESIGN AND DEVELOPMENT SECTION
ENGINEER:	IBRAHIM THOAM
STRUCTURAL CHECKER:	ABDULLA RAMEEZ
ARCHITECT:	AMINATH ZOONA
ARCHITECTURAL CHECKER:	IRFAN WAHEED
PAPER	A3
SCALE	AS GVN
DRAWN BY:	AMINATH SAMAHA
CHECKED BY:	HASSAN SHAHULAN
DATE	19-08-2020

REV	DESCRIPTION	DATE	APPR

SHEET IDENTIFICATION NUMBER

A6.14

SHEET TITLE

49

COPYRIGHT! All plans, sketches, drawings, graphic representations and specifications prepared by the Architect(s) & Engineer(s) are instruments of service. The copyright and ownership of both the design and these instruments of service belong to the Architect(s) & Engineer(s) and may not be used for any other project, or sold, or offered for sale by any party other than the Architect/Engineer unless the Architect/Engineer has given written consent. Copies of the documents submitted to the client prepared by the Architect/Engineer maybe used as they were intended; once; and on the same site and project.

LABEL	FG14
PLAN VIEW	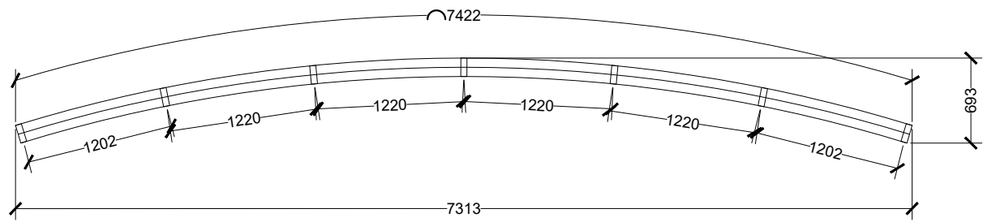
ELEVATION VIEW	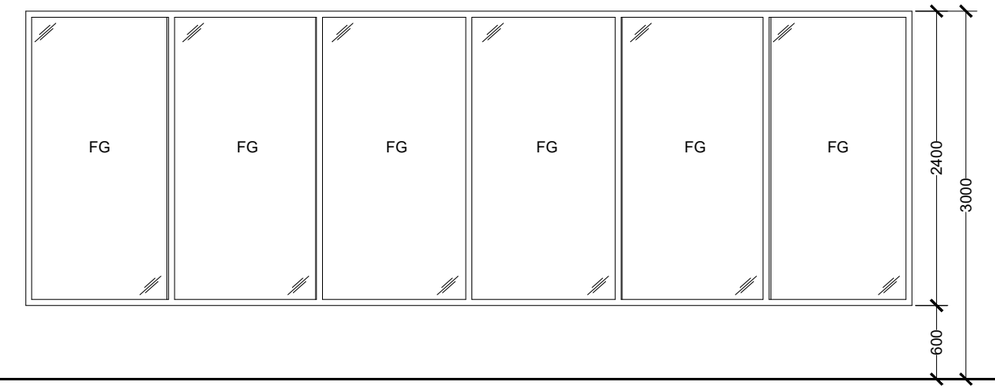
DESCRIPTION	CURVED FIXED GLASS SET 14
DOOR FRAME	POWDER COATED ALUMINUM IN BLACK
DOOR PANEL	LOW-E TEMPERED GLASS
HARDWARE	-
COMMENTS	REFLECTIVE GLASS
LOCATION(S)	MAIN LOBBY AREA
NO(S)	1

DOOR WINDOW SCHEDULE

SCALE 1:50

0 0.25 0.5 1 2 METERS

M T C C
MALDIVES TRANSPORT & CONTRACTING COMPANY PLC
SURVEY,DESIGN AND DEVELOPMENT SECTION
CONSTRUCTION AND PROJECTS MANGEMENT DEPARTMENT,
MTCC TOWER, BODU THAKURUFAANU MAGU, MALÉ 20181,
REPUBLIC OF MALDIVES,
PHONE:- (960) 332 6822,FAX: +(960) 333 2835
E-MAIL: design.development@mtcc.com.mv

PROJECT TITLE	MID HOSPITAL PROJECT
DRAWING TITLE	AS GIVEN
CLIENT & ADDRESS	MINISTRY OF HEALTH
PROJECT LOCATION	-
DESIGN ARCHITECT:	SURVEYING, DESIGN AND DEVELOPMENT SECTION
ENGINEER:	IBRAHIM THOAM
STRUCTURAL CHECKER:	ABDULLA RAMEEZ
ARCHITECT:	AMINATH ZOONA
ARCHITECTURAL CHECKER:	IRFAN WAHEED
PAPER	A3
SCALE	AS GVN
DRAWN BY:	AMINATH SAMAHA
CHECKED BY:	HASSAN SHAHULAN
DATE	19-08-2020

REV	DESCRIPTION	DATE	APPR

SHEET IDENTIFICATION NUMBER

A6.15

SHEET TITLE

50

COPYRIGHT All plans, sketches, drawings, graphic representations and specifications prepared by the Architect(s) & Engineer(s) are instruments of service. The copyright and ownership of both the design and these instruments of service belong to the Architect(s) & Engineer(s) and may not be used for any other project, or sold, or offered for sale by any party other than the Architect/Engineer unless the Architect/Engineer has given written consent. Copies of the documents submitted to the client prepared by the Architect/Engineer maybe used as they were intended; once; and on the same site and project.

LABEL	FG15

PLAN VIEW

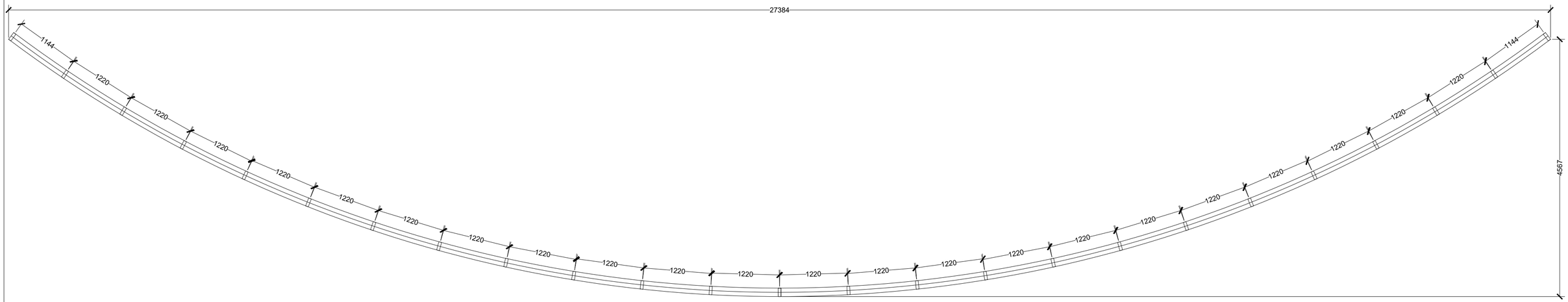

ELEVATION VIEW

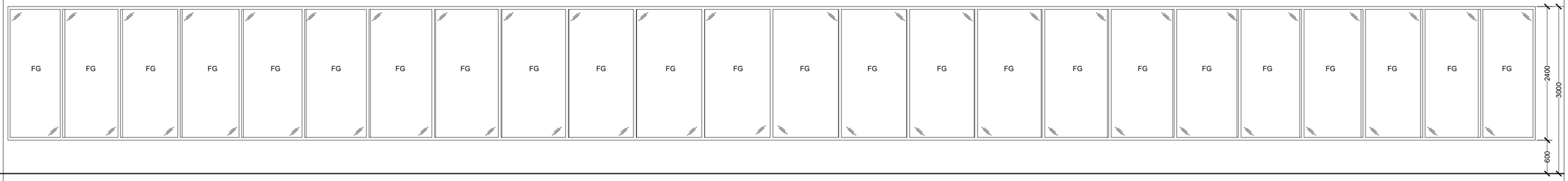

DESCRIPTION	CURVED FIXED GLASS SET 15
DOOR FRAME	POWDER COATED ALUMINUM IN BLACK
DOOR PANEL	LOW-E TEMPERED GLASS
HARDWARE	-
COMMENTS	REFLECTIVE GLASS
LOCATION(S)	WAITING AREA
NO(S)	1

DOOR WINDOW SCHEDULE

SCALE 1:50

0 0.25 0.5 1 2 METERS

M T C C
MALDIVES TRANSPORT & CONTRACTING COMPANY PLC
SURVEY,DESIGN AND DEVELOPMENT SECTION
CONSTRUCTION AND PROJECTS MANAGEMENT DEPARTMENT,
MTCC TOWER, BODU THAKURUFAANU MAGU, MALE' 20181,
REPUBLIC OF MALDIVES.
PHONE: +(960) 332 6822 FAX: +(960) 333 2835
E-MAIL: design.development@mtcc.com.mv

PROJECT TITLE: MID HOSPITAL PROJECT	CLIENT & ADDRESS: MINISTRY OF HEALTH	DESIGN ARCHITECT: SURVEYING, DESIGN AND DEVELOPMENT SECTION		
		ENGINEER: IBRAHIM THOAM	STRUCTURAL CHECKER: ABDULLA RAMEEZ	
DRAWING TITLE: AS GIVEN	PROJECT LOCATION: -	ARCHITECT: AMINATH ZOONA	ARCHITECTURAL CHECKER: IRFAN WAHEED	PAPER: A3 / SCALE: AS GVN
		DRAWN BY: AMINATH SAMAHA	CHECKED BY: HASSAN SHAHULAN	DATE: 19-08-2020

REV	DESCRIPTION	DATE	APPR

SHEET IDENTIFICATION NUMBER

A6.16

SHEET TITLE

51

COPYRIGHT All plans, sketches, drawings, graphic representations and specifications prepared by the Architect(s) & Engineer(s) are instruments of service. The copyright and ownership of both the design and these instruments of service belong to the Architect(s) & Engineer(s) and may not be used for any other project, or sold, or offered for sale by any party other than the Architect/Engineer unless the Architect/Engineer has given written consent. Copies of the documents submitted to the client prepared by the Architect/Engineer maybe used as they were intended; once; and on the same site and project.

3D VISUALS

M T C C
MALDIVES TRANSPORT & CONTRACTING COMPANY PLC

SURVEY,DESIGN AND DEVELOPMENT SECTION
CONSTRUCTION AND PROJECTS MANGEMENT DEPARTMENT,
MTCC TOWER, BODU THAKURUFAANU MAGU, MALÉ 20181,
REPUBLIC OF MALDIVES.
PHONE:+(960) 332 6822,FAX: +(960) 333 2835
E-MAIL: design.development@mtcc.com.mv

PROJECT TITLE: MID HOSPITAL PROJECT	CLIENT & ADDRESS: MINISTRY OF HEALTH	DESIGN ARCHITECT: SURVEYING, DESIGN AND DEVELOPMENT SECTION				REV	DESCRIPTION	DATE	APPR
		ENGINEER: IBRAHIM THOAM	STRUCTURAL CHECKER: ABDULLA RAMEEZ						
DRAWING TITLE: AS GIVEN	PROJECT LOCATION	ARCHITECT: AMINATH ZOONA	ARCHITECTURAL CHECKER: IRFAN WAHEED	PAPER: A3	SCALE: AS GVN				
		DRAWN BY: HASSAN SHAHULAN	CHECKED BY: AMINATH SAMAHA	DATE: 11-06-2020					

SHEET IDENTIFICATION NUMBER
A8.01
SHEET TITLE
52

COPYRIGHT All plans, sketches, drawings, graphic representations and specifications prepared by the Architect(s) & Engineer(s) are instruments of service. The copyright and ownership of both the design and these instruments of service belong to the Architect(s) & Engineer(s) and may not be used for any other project, or sold, or offered for sale by any party other than the Architect/Engineer unless the Architect/Engineer has given written consent. Copies of the documents submitted to the client prepared by the Architect/Engineer maybe used as they were intended; once; and on the same site and project.

3D VISUALS

M T C C
MALDIVES TRANSPORT & CONTRACTING COMPANY PLC

SURVEY,DESIGN AND DEVELOPMENT SECTION
CONSTRUCTION AND PROJECTS MANGEMENT DEPARTMENT,
MTCC TOWER, BODU THAKURUFAANU MAGU, MALÉ 20181,
REPUBLIC OF MALDIVES.
PHONE: +(960) 332 6822,FAX: +(960) 333 2835
E-MAIL: design.development@mtcc.com.mv

PROJECT TITLE: MID HOSPITAL PROJECT	CLIENT & ADDRESS: MINISTRY OF HEALTH	DESIGN ARCHITECT: SURVEYING, DESIGN AND DEVELOPMENT SECTION		
		ENGINEER: IBRAHIM THOAM	STRUCTURAL CHECKER: ABDULLA RAMEEZ	
DRAWING TITLE: AS GIVEN	PROJECT LOCATION	ARCHITECT: AMINATH ZOONA	ARCHITECTURAL CHECKER: IRFAN WAHEED	PAPER A3 / SCALE AS GVN
		DRAWN BY: HASSAN SHAHULAN	CHECKED BY: AMINATH SAMAHA	DATE 11-06-2020

REV	DESCRIPTION	DATE	APPR

SHEET IDENTIFICATION NUMBER
A8.02
SHEET TITLE
53

COPYRIGHT All plans, sketches, drawings, graphic representations and specifications prepared by the Architect(s) & Engineer(s) are instruments of service. The copyright and ownership of both the design and these instruments of service belong to the Architect(s) & Engineer(s) and may not be used for any other project, or sold, or offered for sale by any party other than the Architect/Engineer unless the Architect/Engineer has given written consent. Copies of the documents submitted to the client prepared by the Architect/Engineer maybe used as they were intended; once; and on the same site and project.

3D VISUALS

M T C C
MALDIVES TRANSPORT & CONTRACTING COMPANY PLC
SURVEY,DESIGN AND DEVELOPMENT SECTION
CONSTRUCTION AND PROJECTS MANGEMENT DEPARTMENT,
MTCC TOWER, BODU THAKURUFAANU MAGU, MALE' 20181,
REPUBLIC OF MALDIVES,
PHONE: + (960) 332 6622,FAX: + (960) 333 2835
E-MAIL: design.development@mtcc.com.mv

PROJECT TITLE: MID HOSPITAL PROJECT	CLIENT & ADDRESS: MINISTRY OF HEALTH	DESIGN ARCHITECT: SURVEYING, DESIGN AND DEVELOPMENT SECTION							
		ENGINEER: IBRAHIM THOAM	STRUCTURAL CHECKER: ABDULLA RAMEEZ						
DRAWING TITLE: AS GIVEN	PROJECT LOCATION	ARCHITECT: AMINATH ZOONA	ARCHITECTURAL CHECKER: IRFAN WAHEED	PAPER: A3	SCALE: AS GVN				
		DRAWN BY: HASSAN SHAHULAN	CHECKED BY: AMINATH SAMAHA	DATE: 11-06-2020					

REV	DESCRIPTION	DATE	APPR

SHEET IDENTIFICATION NUMBER: A8.03

SHEET TITLE: 54

COPYRIGHT All plans, sketches, drawings, graphic representations and specifications prepared by the Architect(s) & Engineer(s) are instruments of service. The copyright and ownership of both the design and these instruments of service belong to the Architect(s) & Engineer(s) and may not be used for any other project, or sold, or offered for sale by any party other than the Architect/Engineer unless the Architect/Engineer has given written consent. Copies of the documents submitted to the client prepared by the Architect/Engineer maybe used as they were intended; once; and on the same site and project.

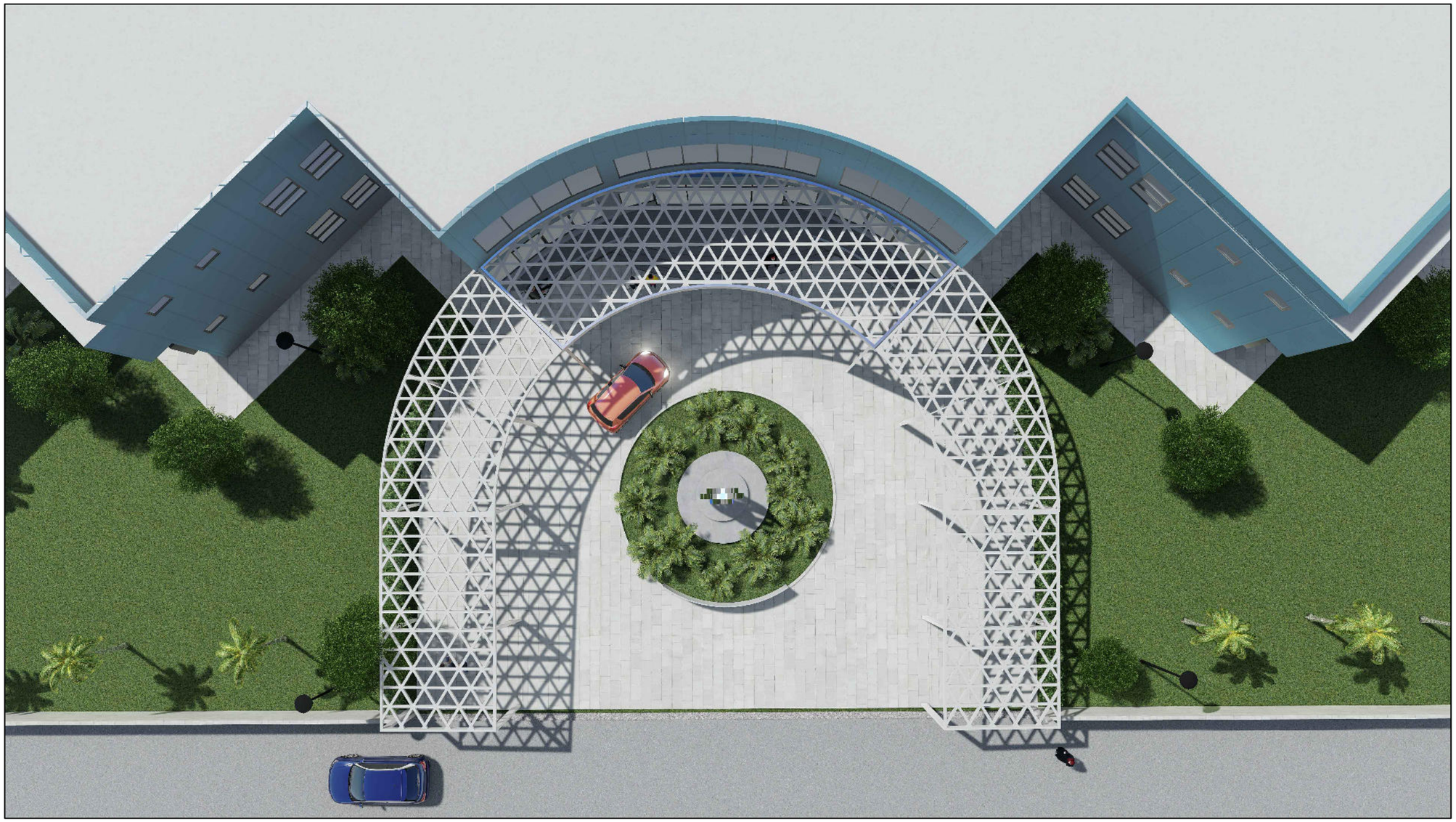

3D VISUALS

M T C C
MALDIVES TRANSPORT & CONTRACTING COMPANY PLC

SURVEY,DESIGN AND DEVELOPMENT SECTION
CONSTRUCTION AND PROJECTS MANGEMENT DEPARTMENT,
MTCC TOWER, BODU THAKURUFAANU MAGU, MALE' 20181,
REPUBLIC OF MALDIVES.
PHONE :+(960) 332 6822,FAX: +(960) 333 2835
E-MAIL: design.development@mtcc.com.mv

PROJECT TITLE: MID HOSPITAL PROJECT	CLIENT & ADDRESS: MINISTRY OF HEALTH	DESIGN ARCHITECT: SURVEYING, DESIGN AND DEVELOPMENT SECTION							
		ENGINEER: IBRAHIM THOAM	STRUCTURAL CHECKER: ABDULLA RAMEEZ						
DRAWING TITLE: AS GIVEN	PROJECT LOCATION	ARCHITECT: AMINATH ZOONA	ARCHITECTURAL CHECKER: IRFAN WAHEED	PAPER: A3	SCALE: AS GVN				
		DRAWN BY: HASSAN SHAHULAN	CHECKED BY: AMINATH SAMAHA	DATE: 11-06-2020					

REV	DESCRIPTION	DATE	APPR

SHEET IDENTIFICATION NUMBER
A8.04
SHEET TITLE
55

COPYRIGHT All plans, sketches, drawings, graphic representations and specifications prepared by the Architect(s) & Engineer(s) are instruments of service. The copyright and ownership of both the design and these instruments of service belong to the Architect(s) & Engineer(s) and may not be used for any other project, or sold, or offered for sale by any party other than the Architect/Engineer unless the Architect/Engineer has given written consent. Copies of the documents submitted to the client prepared by the Architect/Engineer maybe used as they were intended; once, and on the same site and project.

3D VISUALS

M T C C
MALDIVES TRANSPORT & CONTRACTING COMPANY PLC
SURVEY,DESIGN AND DEVELOPMENT SECTION
CONSTRUCTION AND PROJECTS MANGEMENT DEPARTMENT,
MTCC TOWER, BODU THAKURUFAANU MAGU, MALE' 20181,
REPUBLIC OF MALDIVES,
PHONE: + (960) 332 6622,FAX: + (960) 333 2835
E-MAIL: design.development@mtcc.com.mv

PROJECT TITLE: MID HOSPITAL PROJECT	CLIENT & ADDRESS: MINISTRY OF HEALTH	DESIGN ARCHITECT: SURVEYING, DESIGN AND DEVELOPMENT SECTION					
		ENGINEER: IBRAHIM THOAM	STRUCTURAL CHECKER: ABDULLA RAMEEZ				
DRAWING TITLE: AS GIVEN	PROJECT LOCATION	ARCHITECT: AMINATH ZOONA	ARCHITECTURAL CHECKER: IRFAN WAHEED	PAPER: A3	SCALE: AS GVN		
		DRAWN BY: HASSAN SHAHULAN	CHECKED BY: AMINATH SAMAHA	DATE: 11-06-2020			

REV	DESCRIPTION	DATE	APPR

SHEET IDENTIFICATION NUMBER

A8.05

SHEET TITLE

56

COPYRIGHT All plans, sketches, drawings, graphic representations and specifications prepared by the Architect(s) & Engineer(s) are instruments of service. The copyright and ownership of both the design and these instruments of service belong to the Architect(s) & Engineer(s) and may not be used for any other project, or sold, or offered for sale by any party other than the Architect/Engineer unless the Architect/Engineer has given written consent. Copies of the documents submitted to the client prepared by the Architect/Engineer maybe used as they were intended; once; and on the same site and project.

3D VISUALS

M T C C
MALDIVES TRANSPORT & CONTRACTING COMPANY PLC

SURVEY,DESIGN AND DEVELOPMENT SECTION
CONSTRUCTION AND PROJECTS MANGEMENT DEPARTMENT,
MTCC TOWER, BODU THAKURUFAANU MAGU, MALE' 20181,
REPUBLIC OF MALDIVES.
PHONE: + (960) 332 6822,FAX: + (960) 333 2835
E-MAIL: design.development@mtcc.com.mv

PROJECT TITLE: MID HOSPITAL PROJECT	CLIENT & ADDRESS: MINISTRY OF HEALTH	DESIGN ARCHITECT: SURVEYING, DESIGN AND DEVELOPMENT SECTION			
		ENGINEER: IBRAHIM THOAM	STRUCTURAL CHECKER: ABDULLA RAMEEZ		
DRAWING TITLE: AS GIVEN	PROJECT LOCATION	ARCHITECT: AMINATH ZOONA	ARCHITECTURAL CHECKER: IRFAN WAHEED	PAPER: A3	SCALE: AS GVN
		DRAWN BY: HASSAN SHAHULAN	CHECKED BY: AMINATH SAMAHA	DATE: 11-06-2020	

REV	DESCRIPTION	DATE	APPR

SHEET IDENTIFICATION NUMBER
A8.06
SHEET TITLE
57

COPYRIGHT All plans, sketches, drawings, graphic representations and specifications prepared by the Architect(s) & Engineer(s) are instruments of service. The copyright and ownership of both the design and these instruments of service belong to the Architect(s) & Engineer(s) and may not be used for any other project, or sold, or offered for sale by any party other than the Architect/Engineer unless the Architect/Engineer has given written consent. Copies of the documents submitted to the client prepared by the Architect/Engineer maybe used as they were intended; once; and on the same site and project.

3D VISUALS

M T C C
MALDIVES TRANSPORT & CONTRACTING COMPANY PLC
SURVEY,DESIGN AND DEVELOPMENT SECTION
CONSTRUCTION AND PROJECTS MANGEMENT DEPARTMENT
MTCC TOWER, BODU THAKURUFAANU MAGU, MALE' 20181,
REPUBLIC OF MALDIVES.
PHONE: + (960) 332 6822 FAX: + (960) 333 2835
E-MAIL: design.development@mtcc.com.mv

PROJECT TITLE	MID HOSPITAL PROJECT
DRAWING TITLE	AS GIVEN
CLIENT & ADDRESS	MINISTRY OF HEALTH
PROJECT LOCATION	
DESIGN ARCHITECT:	SURVEYING, DESIGN AND DEVELOPMENT SECTION
ENGINEER:	IBRAHIM THOAM
STRUCTURAL CHECKER:	ABDULLA RAMEEZ
ARCHITECT:	AMINATH ZOONA
ARCHITECTURAL CHECKER:	IRFAN WAHEED
PAPER	A3
SCALE	AS GVN
DRAWN BY:	HASSAN SHAHULAN
CHECKED BY:	AMINATH SAMAHA
DATE	11-06-2020

REV	DESCRIPTION	DATE	APPR

SHEET IDENTIFICATION NUMBER
A8.07
SHEET TITLE
58

COPYRIGHT All plans, sketches, drawings, graphic representations and specifications prepared by the Architect(s) & Engineer(s) are instruments of service. The copyright and ownership of both the design and these instruments of service belong to the Architect(s) & Engineer(s) and may not be used for any other project, or sold, or offered for sale by any party other than the Architect/Engineer unless the Architect/Engineer has given written consent. Copies of the documents submitted to the client prepared by the Architect/Engineer maybe used as they were intended; once; and on the same site and project.

3D VISUALS

M T C C
MALDIVES TRANSPORT & CONTRACTING COMPANY PLC

SURVEY,DESIGN AND DEVELOPMENT SECTION
CONSTRUCTION AND PROJECTS MANGEMENT DEPARTMENT,
MTCC TOWER, BODU THAKURUFAANU MAGU, MALE 20181,
REPUBLIC OF MALDIVES.
PHONE: +(960) 332 6822,FAX: +(960) 333 2835
E-MAIL: design.development@mtcc.com.mv

PROJECT TITLE: MID HOSPITAL PROJECT	CLIENT & ADDRESS: MINISTRY OF HEALTH	DESIGN ARCHITECT: SURVEYING, DESIGN AND DEVELOPMENT SECTION				REV	DESCRIPTION	DATE	APPR
		ENGINEER: IBRAHIM THOAM	STRUCTURAL CHECKER: ABDULLA RAMEEZ						
DRAWING TITLE: AS GIVEN	PROJECT LOCATION	ARCHITECT: AMINATH ZOONA	ARCHITECTURAL CHECKER: IRFAN WAHEED	PAPER A3	SCALE AS GVN				
		DRAWN BY: HASSAN SHAHULAN	CHECKED BY: AMINATH SAMAHA	DATE 11-06-2020					

SHEET IDENTIFICATION NUMBER: A8.08

SHEET TITLE: 59

COPYRIGHT All plans, sketches, drawings, graphic representations and specifications prepared by the Architect(s) & Engineer(s) are instruments of service. The copyright and ownership of both the design and these instruments of service belong to the Architect(s) & Engineer(s) and may not be used for any other project, or sold, or offered for sale by any party other than the Architect/Engineer unless the Architect/Engineer has given written consent. Copies of the documents submitted to the client prepared by the Architect/Engineer maybe used as they were intended; once, and on the same site and project.

3D VISUALS

M T C C
MALDIVES TRANSPORT & CONTRACTING COMPANY PLC

SURVEY,DESIGN AND DEVELOPMENT SECTION
CONSTRUCTION AND PROJECTS MANGEMENT DEPARTMENT
MTCC TOWER, BODU THAKURUFAANU MAGU, MALE' 20181,
REPUBLIC OF MALDIVES,
PHONE:- (960) 332 6822,FAX: +(960) 333 2835
E-MAIL: design.developmemt@mtcc.com.mv

PROJECT TITLE: MID HOSPITAL PROJECT	CLIENT & ADDRESS: MINISTRY OF HEALTH	DESIGN ARCHITECT: SURVEYING, DESIGN AND DEVELOPMENT SECTION			
		ENGINEER: IBRAHIM THOAM	STRUCTURAL CHECKER: ABDULLA RAMEEZ		
DRAWING TITLE: AS GIVEN	PROJECT LOCATION	ARCHITECT: AMINATH ZOONA	ARCHITECTURAL CHECKER: IRFAN WAHEED	PAPER: A3	SCALE: AS GVN
		DRAWN BY: HASSAN SHAHULAN	CHECKED BY: AMINATH SAMAHA	DATE: 11-06-2020	

REV	DESCRIPTION	DATE	APPR

SHEET IDENTIFICATION NUMBER
A8.09
SHEET TITLE
60

COPYRIGHT All plans, sketches, drawings, graphic representations and specifications prepared by the Architect(s) & Engineer(s) are instruments of service. The copyright and ownership of both the design and these instruments of service belong to the Architect(s) & Engineer(s) and may not be used for any other project, or sold, or offered for sale by any party other than the Architect/Engineer unless the Architect/Engineer has given written consent. Copies of the documents submitted to the client prepared by the Architect/Engineer maybe used as they were intended; once; and on the same site and project.

FOUNDATION DEPTH: 1500MM

IMPORTANT NOTE: FOUNDATION IS DESIGNED FOR A 6-STOREY BUILDING, CONSIDERING POSSIBLE FUTURE DEVELOPMENT

FOUNDATION PLAN

SCALE 1:100

PLOT BOUNDARY

STAIR STARTER PEDESTAL
REINF.: T10@100c/c 2 LAYERS
(STAGGERED

STAIR STARTER PEDESTAL
REINF.: T10@100c/c 2 LAYERS
(STAGGERED

STAIR STARTER PEDESTAL
REINF.: T10@100c/c 2 LAYERS
(STAGGERED

S1.01

COLUMN PLAN

SCALE 1:100

0 0.5 1 2 4 METERS

MTCC MALDIVES TRANSPORT & CONTRACTING COMPANY PLC SURVEY,DESIGN AND DEVELOPMENT SECTION CONSTRUCTION AND PROJECTS MANGEMENT DEPARTMENT MTCC TOWER, BODU THAKURUFAANU MAGU, MALE' 20181, REPUBLIC OF MALDIVES. PHONE: + (960) 332 6822,FAX: + (960) 333 2835 E-MAIL: design.development@mtcc.com.mv	PROJECT TITLE MID HOSPITAL PROJECT	CLIENT & ADDRESS MINISTRY OF HEALTH	DESIGN ARCHITECT: SURVEYING, DESIGN AND DEVELOPMENT SECTION	
			ENGINEER: IBRAHIM THOAM	STRUCTURAL CHECKER: ABDULLA RAMEEZ
	DRAWING TITLE AS GIVEN	PROJECT LOCATION -	ARCHITECT: AMINATH ZOONA	ARCHITECTURAL CHECKER: IRFAN WAHEED — PAPER: A0 — SCALE: AS GVN
			DRAWN BY: AHMED IMAD	CHECKED BY: AMINATH SAMAHA — DATE: 02-07-2020

REV	DESCRIPTION	DATE	APPR

SHEET IDENTIFICATION NUMBER

S1.02

SHEET TITLE
62

COPYRIGHT All plans, sketches, drawings, graphic representations and specifications prepared by the Architect(s) & Engineer(s) are instruments of service. The copyright and ownership of both the design and these instruments of service belong to the Architect(s) & Engineer(s) and may not be used for any other project, or sold, or offered for sale by any party other than the Architect/Engineer unless the Architect/Engineer has given written consent. Copies of the documents submitted to the client prepared by the Architect/Engineer maybe used as they were intended; once; and on the same site and project.

FIRST FLOOR BEAM PLAN
SCALE 1:100

MTCC MALDIVES TRANSPORT & CONTRACTING COMPANY PLC	PROJECT TITLE: MID HOSPITAL PROJECT	CLIENT & ADDRESS: MINISTRY OF HEALTH	DESIGN ARCHITECT: SURVEYING, DESIGN AND DEVELOPMENT SECTION				REV	DESCRIPTION	DATE	APPR	SHEET IDENTIFICATION NUMBER
SURVEY, DESIGN AND DEVELOPMENT SECTION CONSTRUCTION AND PROJECTS MANGEMENT DEPARTMENT. MTCC TOWER, BODU THAKURUFAANU MAGU, MALE' 20181, REPUBLIC OF MALDIVES. PHONE: + (960) 332 6822,FAX: + (960) 333 2835 E-MAIL: design.development@mtcc.com.mv			ENGINEER: IBRAHIM THOAM	STRUCTURAL CHECKER: ABDULLA RAMEEZ							S1.04
	DRAWING TITLE: AS GIVEN	PROJECT LOCATION: -	ARCHITECT: AMINATH ZOONA	ARCHITECTURAL CHECKER: IRFAN WAHEED	PAPER: A0	SCALE: AS GVN					
			DRAWN BY: AHMED IMAD	CHECKED BY: AMINATH SAMAHA	DATE: 02-07-2020						SHEET TITLE 63

COPYRIGHT All plans, sketches, drawings, graphic representations and specifications prepared by the Architect(s) & Engineer(s) are instruments of service. The copyright and ownership of both the design and these instruments of service belong to the Architect(s) & Engineer(s) and may not be used for any other project, or sold, or offered for sale by any party other than the Architect/Engineer unless the Architect/Engineer has given written consent. Copies of the documents submitted to the client prepared by the Architect/Engineer maybe used as they were intended; once; and on the same site and project.

MTCC MALDIVES TRANSPORT & CONTRACTING COMPANY PLC	PROJECT TITLE: MID HOSPITAL PROJECT	CLIENT & ADDRESS: MINISTRY OF HEALTH	DESIGN ARCHITECT: SURVEYING, DESIGN AND DEVELOPMENT SECTION			
SURVEY, DESIGN AND DEVELOPMENT SECTION, CONSTRUCTION AND PROJECTS MANGEMENT DEPARTMENT, MTCC TOWER, BODU THAKURUFAANU MAGU, MALE' 20181, REPUBLIC OF MALDIVES. PHONE: +(960) 332 6822, FAX: +(960) 333 2835, E-MAIL: design.development@mtcc.com.mv	DRAWING TITLE: AS GIVEN	PROJECT LOCATION: -	ENGINEER: IBRAHIM THOAM	STRUCTURAL CHECKER: ABDULLA RAMEEZ		
			ARCHITECT: AMINATH ZOONA	ARCHITECTURAL CHECKER: IRFAN WAHEED	PAPER: A0	SCALE: AS GVN
			DRAWN BY: AHMED IMAD	CHECKED BY: AMINATH SAMAHA	DATE: 02-07-2020	

REV	DESCRIPTION	DATE	APPR

SHEET IDENTIFICATION NUMBER
S1.04
SHEET TITLE
64

COPYRIGHT All plans, sketches, drawings, graphic representations and specifications prepared by the Architect(s) & Engineer(s) are instruments of service. The copyright and ownership of both the design and these instruments of service belong to the Architect(s) & Engineer(s) and may not be used for any other project, or sold, or offered for sale by any party other than the Architect/Engineer unless the Architect/Engineer has given written consent. Copies of the documents submitted to the client prepared by the Architect/Engineer maybe used as they were intended; once; and on the same site and project.

SECOND FLOOR BEAM PLAN
SCALE 1:100

MTCC MALDIVES TRANSPORT & CONTRACTING COMPANY PLC	PROJECT TITLE: MID HOSPITAL PROJECT	CLIENT & ADDRESS: MINISTRY OF HEALTH	DESIGN ARCHITECT: SURVEYING, DESIGN AND DEVELOPMENT SECTION	SHEET IDENTIFICATION NUMBER: S1.05
SURVEY,DESIGN AND DEVELOPMENT SECTION, CONSTRUCTION AND PROJECTS MANGEMENT DEPARTMENT, MTCC TOWER, BODU THAKURUFAANU MAGU, MALE' 20181, REPUBLIC OF MALDIVES. PHONE: + (960) 332 6822,FAX: + (960) 333 2835, E-MAIL: design.development@mtcc.com.mv	DRAWING TITLE: AS GIVEN	PROJECT LOCATION: -	ENGINEER: IBRAHIM THOAM; STRUCTURAL CHECKER: ABDULLA RAMEEZ; ARCHITECT: AMINATH ZOONA; ARCHITECTURAL CHECKER: IRFAN WAHEED; PAPER: A0; SCALE: AS GVN; DRAWN BY: AHMED IMAD; CHECKED BY: AMINATH SAMAHA; DATE: 02-07-2020	SHEET TITLE: 65

REV	DESCRIPTION	DATE	APPR

COPYRIGHT All plans, sketches, drawings, graphic representations and specifications prepared by the Architect(s) & Engineer(s) are instruments of service. The copyright and ownership of both the design and these instruments of service belong to the Architect(s) & Engineer(s) and may not be used for any other project, or sold, or offered for sale by any party other than the Architect/Engineer unless the Architect/Engineer has given written consent. Copies of the documents submitted to the client prepared by the Architect/Engineer maybe used as they were intended; once; and on the same site and project.

FIRST FLOOR SLAB PLAN

SCALE 1:100

0 0.5 1 2 4 METERS

MTCC MALDIVES TRANSPORT & CONTRACTING COMPANY PLC	PROJECT TITLE: MID HOSPITAL PROJECT	CLIENT & ADDRESS: MINISTRY OF HEALTH	DESIGN ARCHITECT: SURVEYING, DESIGN AND DEVELOPMENT SECTION		
	DRAWING TITLE: AS GIVEN	PROJECT LOCATION: -	ENGINEER: IBRAHIM THOAM	STRUCTURAL CHECKER: ABDULLA RAMEEZ	
			ARCHITECT: AMINATH ZOONA	ARCHITECTURAL CHECKER: IRFAN WAHEED	PAPER: A0 / SCALE: AS GVN
			DRAWN BY: AHMED IMAD	CHECKED BY: AMINATH SAMAHA	DATE: 02-07-2020

SURVEY,DESIGN AND DEVELOPMENT SECTION
CONSTRUCTION AND PROJECTS MANGEMENT DEPARTMENT.
MTCC TOWER, BODU THAKURUFAANU MAGU, MALE' 20181,
REPUBLIC OF MALDIVES.
PHONE: + (960) 332 6822,FAX: + (960) 333 2835
E-MAIL: design.development@mtcc.com.mv

REV	DESCRIPTION	DATE	APPR

SHEET IDENTIFICATION NUMBER: S1.06

SHEET TITLE: 66

COPYRIGHT All plans, sketches, drawings, graphic representations and specifications prepared by the Architect(s) & Engineer(s) are instruments of service. The copyright and ownership of both the design and these instruments of service belong to the Architect(s) & Engineer(s) and may not be used for any other project, or sold, or offered for sale by any party other than the Architect/Engineer unless the Architect/Engineer has given written consent. Copies of the documents submitted to the client prepared by the Architect/Engineer maybe used as they were intended; once; and on the same site and project.

SECOND FLOOR SLAB PLAN

SCALE 1:100

0 0.5 1 2 4 METERS

MTCC MALDIVES TRANSPORT & CONTRACTING COMPANY PLC SURVEY, DESIGN AND DEVELOPMENT SECTION CONSTRUCTION AND PROJECTS MANGEMENT DEPARTMENT. MTCC TOWER, BODU THAKURUFAANU MAGU, MALE' 20181, REPUBLIC OF MALDIVES. PHONE: + (960) 332 6822,FAX: + (960) 333 2835 E-MAIL: design.development@mtcc.com.mv	PROJECT TITLE MID HOSPITAL PROJECT	CLIENT & ADDRESS MINISTRY OF HEALTH	DESIGN ARCHITECT: SURVEYING, DESIGN AND DEVELOPMENT SECTION	SHEET IDENTIFICATION NUMBER S1.07
	DRAWING TITLE AS GIVEN	PROJECT LOCATION -	ENGINEER: IBRAHIM THOAM STRUCTURAL CHECKER: ABDULLA RAMEEZ ARCHITECT: AMINATH ZOONA ARCHITECTURAL CHECKER: IRFAN WAHEED PAPER: A0 SCALE: AS GVN DRAWN BY: AHMED IMAD CHECKED BY: AMINATH SAMAHA DATE: 02-07-2020	SHEET TITLE 67

REV	DESCRIPTION	DATE	APPR

COPYRIGHT All plans, sketches, drawings, graphic representations and specifications prepared by the Architect(s) & Engineer(s) are instruments of service. The copyright and ownership of both the design and these instruments of service belong to the Architect(s) & Engineer(s) and may not be used for any other project, or sold, or offered for sale by any party other than the Architect/Engineer unless the Architect/Engineer has given written consent. Copies of the documents submitted to the client prepared by the Architect/Engineer maybe used as they were intended; once; and on the same site and project.

MACHINE ROOM SLAB PLAN

SCALE 1:100

SLAB THICKNESS: 150mm
TOP REINFORCEMENT: T10 @ 200mm C/C (THROUGHOUT)
BOTTOM REINFORCEMENT: T10 @ 200mm C/C, B/W (THROUGHOUT)

MTCC
MALDIVES TRANSPORT & CONTRACTING COMPANY PLC
SURVEY,DESIGN AND DEVELOPMENT SECTION
CONSTRUCTION AND PROJECTS MANGEMENT DEPARTMENT,
MTCC TOWER, BODU THAKURUFAANU MAGU, MALE 20181,
REPUBLIC OF MALDIVES.
PHONE: + (960) 332 6822 FAX: + (960) 333 2835
E-MAIL: design.development@mtcc.com.mv

PROJECT TITLE: MID HOSPITAL PROJECT	CLIENT & ADDRESS: MINISTRY OF HEALTH	DESIGN ARCHITECT: SURVEYING, DESIGN AND DEVELOPMENT SECTION	
DRAWING TITLE: AS GIVEN	PROJECT LOCATION: -	ENGINEER: IBRAHIM THOAM	STRUCTURAL CHECKER: ABDULLA RAMEEZ
		ARCHITECT: AMINATH ZOONA	ARCHITECTURAL CHECKER: IRFAN WAHEED
		DRAWN BY: AHMED IMAD	CHECKED BY: AMINATH SAMAHA
		PAPER: A0	SCALE: AS GVN
		DATE: 02-07-2020	

REV	DESCRIPTION	DATE	APPR

SHEET IDENTIFICATION NUMBER
S1.08
SHEET TITLE
68

COPYRIGHT All plans, sketches, drawings, graphic representations and specifications prepared by the Architect(s) & Engineer(s) are instruments of service. The copyright and ownership of both the design and these instruments of service belong to the Architect(s) & Engineer(s) and may not be used for any other project, or sold, or offered for sale by any party other than the Architect/Engineer unless the Architect/Engineer has given written consent. Copies of the documents submitted to the client prepared by the Architect/Engineer maybe used as they were intended; once; and on the same site and project.

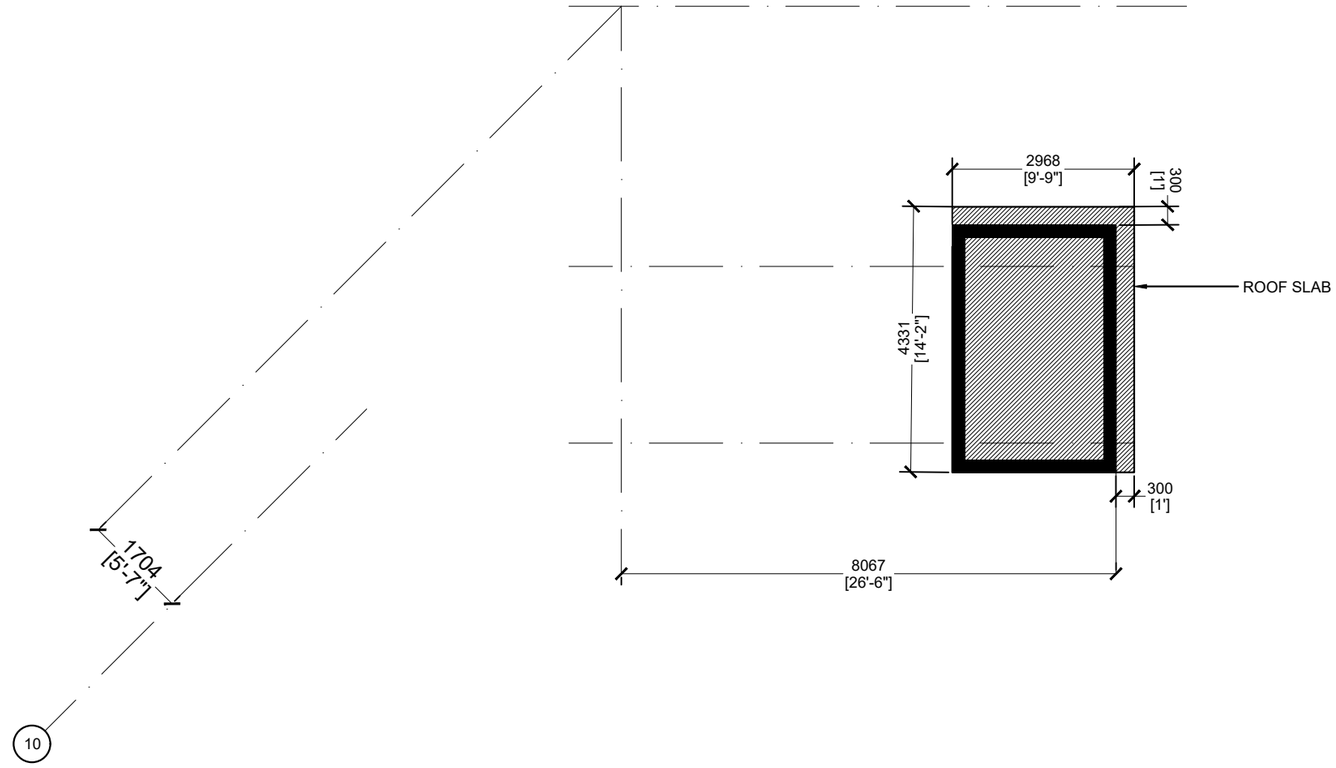

MACHINE ROOM ROOF SLAB

SCALE 1:100

0 0.5 1 2 4 METERS

M T C C
MALDIVES TRANSPORT & CONTRACTING COMPANY PLC
SURVEY,DESIGN AND DEVELOPMENT SECTION
CONSTRUCTION AND PROJECTS MANGEMENT DEPARTMENT,
MTCC TOWER, BODU THAKURUFAANU MAGU, MALE 20181,
REPUBLIC OF MALDIVES.
PHONE: +(960) 332 6822,FAX: +(960) 333 2835
E-MAIL: design.development@mtcc.com.mv

PROJECT TITLE	MID HOSPITAL PROJECT
DRAWING TITLE	AS GIVEN
CLIENT & ADDRESS	MINISTRY OF HEALTH
PROJECT LOCATION	-
DESIGN ARCHITECT:	SURVEYING, DESIGN AND DEVELOPMENT SECTION
ENGINEER:	IBRAHIM THOAM
STRUCTURAL CHECKER:	ABDULLA RAMEEZ
ARCHITECT:	AMINATH ZOONA
ARCHITECTURAL CHECKER:	IRFAN WAHEED
PAPER	A3
SCALE	AS GVN
DRAWN BY:	AHMED IMAD
CHECKED BY:	AMINATH SAMAHA
DATE	02-07-2020

REV	DESCRIPTION	DATE	APPR

SHEET IDENTIFICATION NUMBER

S1.09

SHEET TITLE

69

COPYRIGHT All plans, sketches, drawings, graphic representations and specifications prepared by the Architect(s) & Engineer(s) are instruments of service. The copyright and ownership of both the design and these instruments of service belong to the Architect(s) & Engineer(s) and may not be used for any other project, or sold, or offered for sale by any party other than the Architect/Engineer unless the Architect/Engineer has given written consent. Copies of the documents submitted to the client prepared by the Architect/Engineer maybe used as they were intended; once; and on the same site and project.

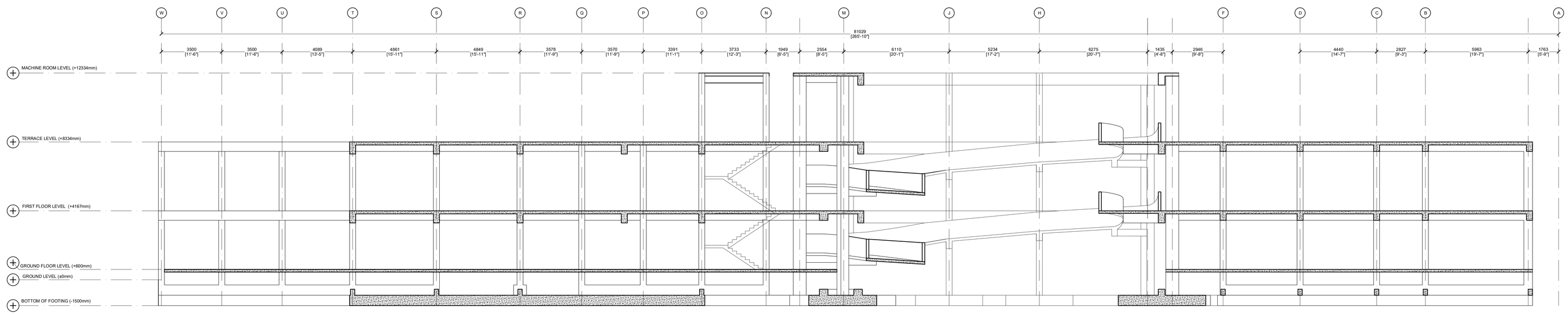

SECTION X-X

SCALE 1:150

METERS

S3.01

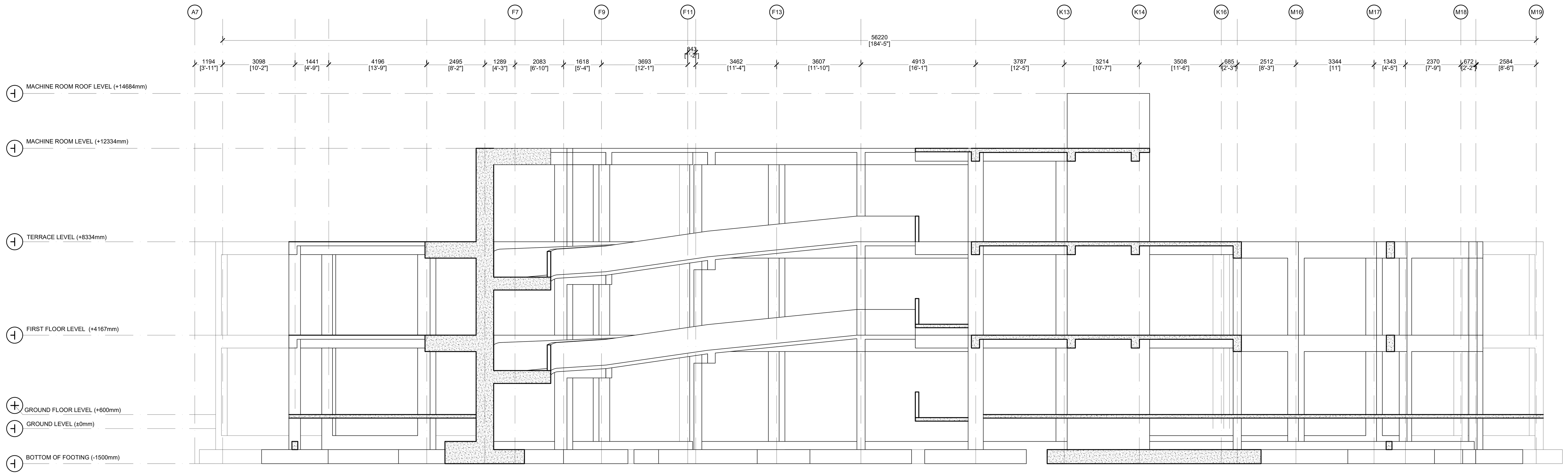

SECTION Y-Y

SCALE 1:100

PROJECT TITLE
MID HOSPITAL PROJECT

DRAWING TITLE
AS GIVEN

CLIENT & ADDRESS
MINISTRY OF HEALTH

PROJECT LOCATION

S3.02

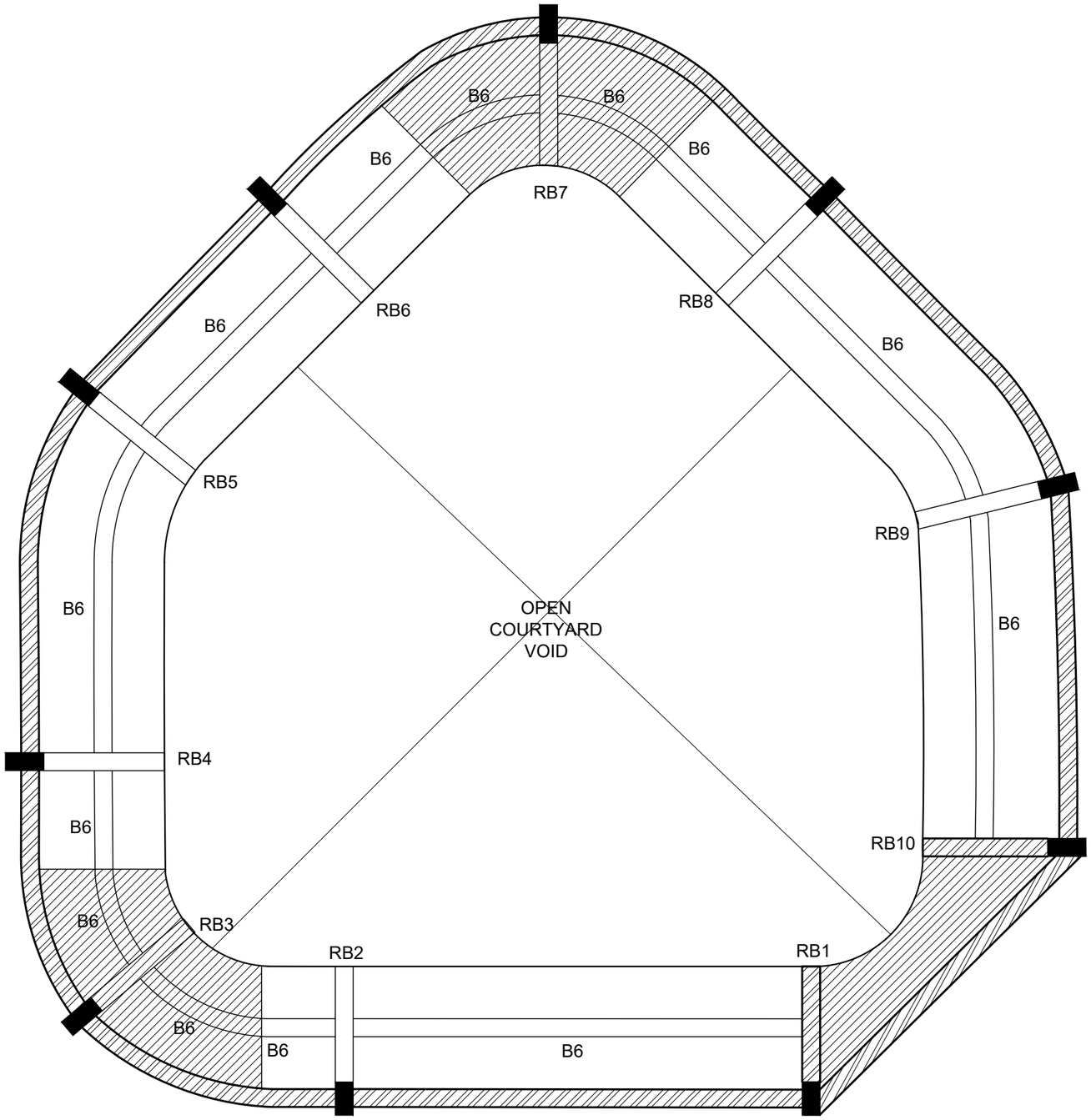

LANDING

BEAM AT FLOOR LEVEL

RAMP DETAILS

SCALE 1:100

0 0.5 1 2 4 METERS

M T C C
MALDIVES TRANSPORT & CONTRACTING COMPANY PLC
SURVEY,DESIGN AND DEVELOPMENT SECTION
CONSTRUCTION AND PROJECTS MANGEMENT DEPARTMENT,
MTCC TOWER, BODU THAKURUFAANU MAGU, MALE 20181,
REPUBLIC OF MALDIVES,
PHONE: (960) 332 6822,FAX: (960) 333 2835
E-MAIL: design.development@mtcc.com.mv

PROJECT TITLE	MID HOSPITAL PROJECT
DRAWING TITLE	AS GIVEN
CLIENT & ADDRESS	MINISTRY OF HEALTH
PROJECT LOCATION	-
DESIGN ARCHITECT:	SURVEYING, DESIGN AND DEVELOPMENT SECTION
ENGINEER:	IBRAHIM THOAM
STRUCTURAL CHECKER:	ABDULLA RAMEEZ
ARCHITECT:	AMINATH ZOONA
ARCHITECTURAL CHECKER:	IRFAN WAHEED
PAPER	A3
SCALE	AS GVN
DRAWN BY:	AHMED IMAD
CHECKED BY:	AMINATH SAMAHA
DATE	02-07-2020

REV	DESCRIPTION	DATE	APPR

SHEET IDENTIFICATION NUMBER

S5.01

SHEET TITLE

72

COPYRIGHT All plans, sketches, drawings, graphic representations and specifications prepared by the Architect(s) & Engineer(s) are instruments of service. The copyright and ownership of both the design and these instruments of service belong to the Architect(s) & Engineer(s) and may not be used for any other project, or sold, or offered for sale by any party other than the Architect/Engineer unless the Architect/Engineer has given written consent. Copies of the documents submitted to the client prepared by the Architect/Engineer maybe used as they were intended; once; and on the same site and project.

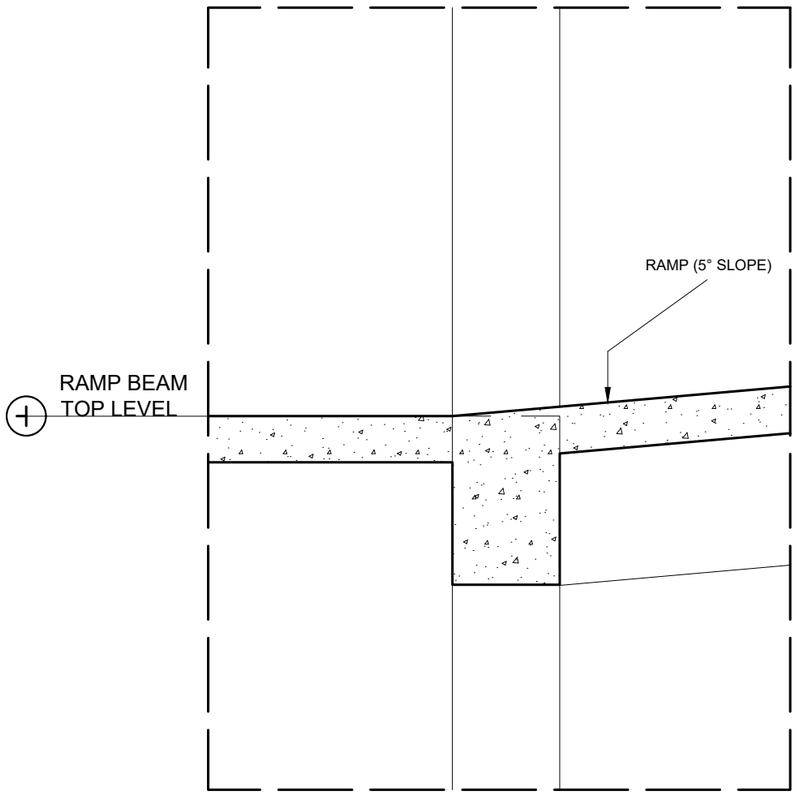

RAMP STARTING BEAM (RB1)

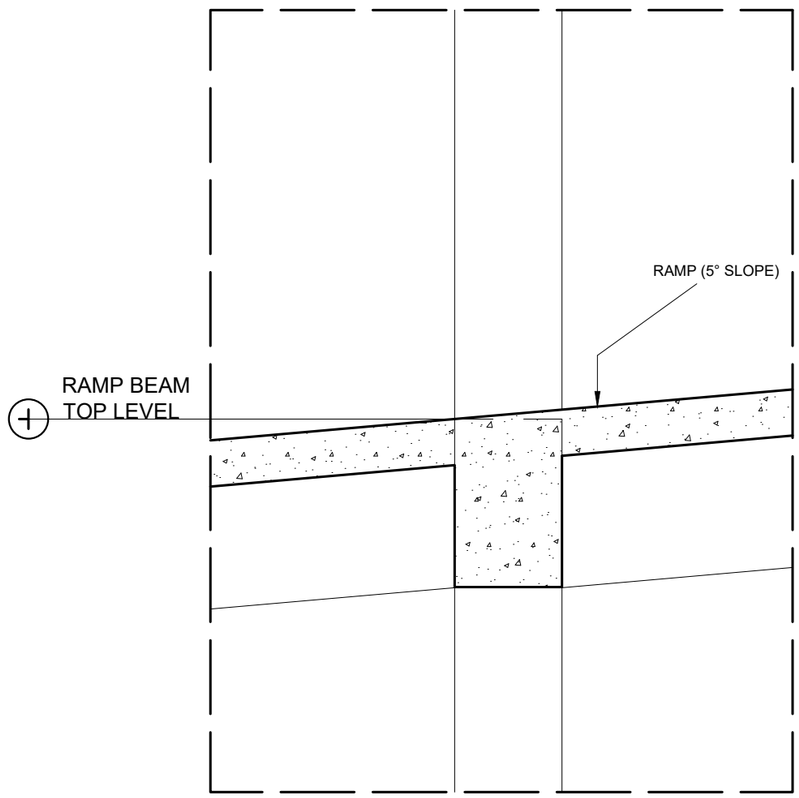

TYPICAL RAMP BEAM

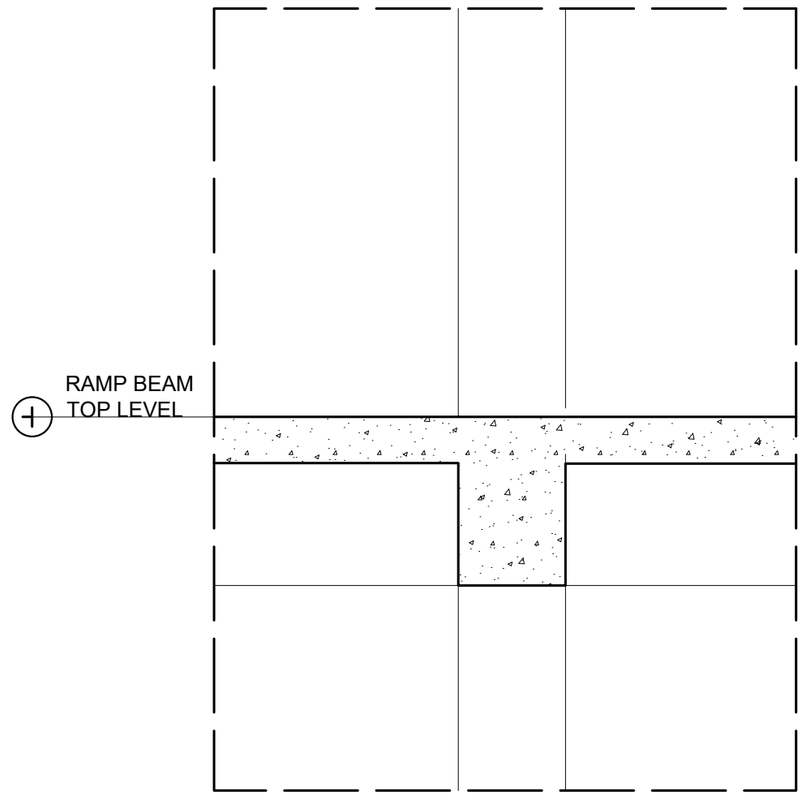

TYPICAL HALF LANDING BEAM (RB3 & RB7)

RAMP DETAILS

SCALE 1:20

0 0.1 0.2 0.4 0.8 METERS

M T C C
MALDIVES TRANSPORT & CONTRACTING COMPANY PLC
SURVEY,DESIGN AND DEVELOPMENT SECTION
CONSTRUCTION AND PROJECTS MANAGEMENT DEPARTMENT,
MTCC TOWER, BODU THAKURUFAANU MAGU, MALE' 20181,
REPUBLIC OF MALDIVES,
PHONE: +(960) 332 6802 FAX: +(960) 333 2835
E-MAIL: design.development@mtcc.com.mv

PROJECT TITLE	MID HOSPITAL PROJECT
DRAWING TITLE	AS GIVEN
CLIENT & ADDRESS	MINISTRY OF HEALTH
PROJECT LOCATION	-
DESIGN ARCHITECT:	SURVEYING, DESIGN AND DEVELOPMENT SECTION
ENGINEER:	IBRAHIM THOAM
STRUCTURAL CHECKER:	ABDULLA RAMEEZ
ARCHITECT:	AMINATH ZOONA
ARCHITECTURAL CHECKER:	IRFAN WAHEED
PAPER	A3
SCALE	AS GVN
DRAWN BY:	AHMED IMAD
CHECKED BY:	AMINATH SAMAHA
DATE	02-07-2020

REV	DESCRIPTION	DATE	APPR

SHEET IDENTIFICATION NUMBER

S5.02

SHEET TITLE

73

COPYRIGHT All plans, sketches, drawings, graphic representations and specifications prepared by the Architect(s) & Engineer(s) are instruments of service. The copyright and ownership of both the design and these instruments of service belong to the Architect(s) & Engineer(s) and may not be used for any other project, or sold, or offered for sale by any party other than the Architect/Engineer unless the Architect/Engineer has given written consent. Copies of the documents submitted to the client prepared by the Architect/Engineer maybe used as they were intended; once; and on the same site and project.

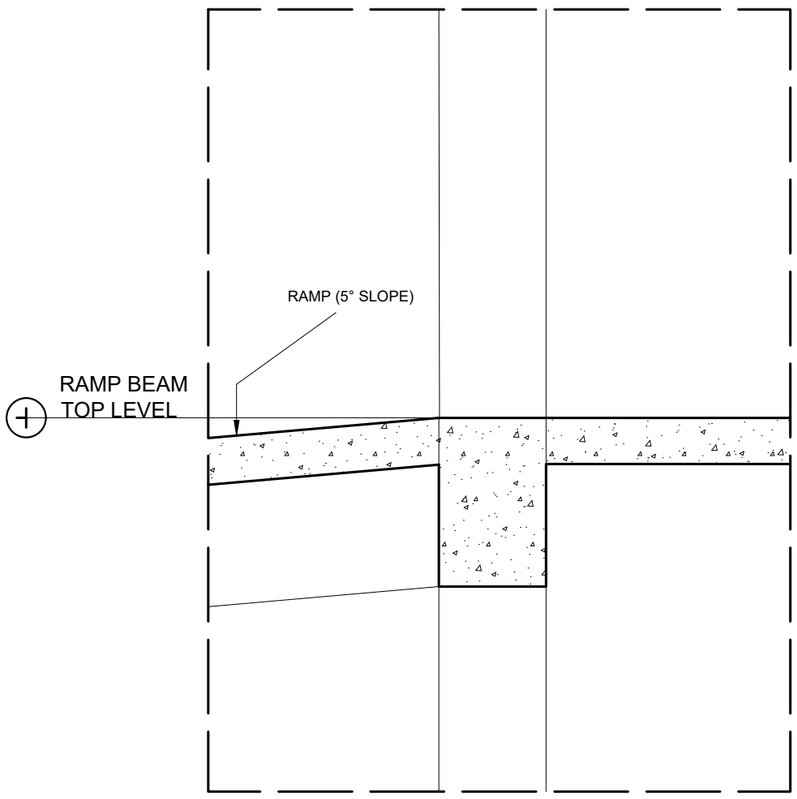

RAMP ENDING BEAM (RB10)

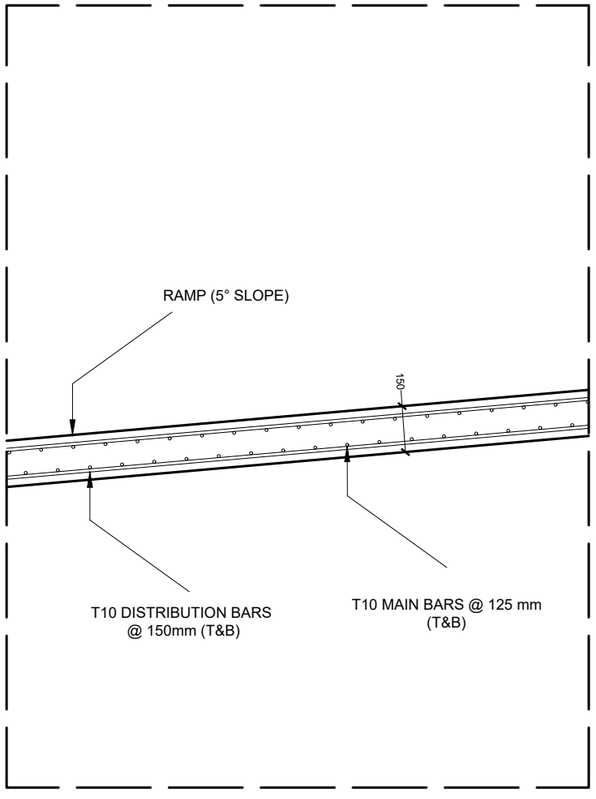

SLAB REINFORCEMENT DETAIL

RAMP BEAM	BEAM TOP LEVEL
RB1	+600
RB2	+1399
RB3	+1556
RB4	+1724
RB5	+2364
RB6	+2822
RB7	+3085
RB8	+3319
RB9	+3953
RB10	+4600

RAMP DETAILS

SCALE 1:20

0 0.1 0.2 0.4 0.8 METERS

M T C C
MALDIVES TRANSPORT & CONTRACTING COMPANY PLC
SURVEY,DESIGN AND DEVELOPMENT SECTION
CONSTRUCTION AND PROJECTS MANGEMENT DEPARTMENT,
MTCC TOWER, BODU THAKURUFAANU MAGU, MALE' 20181,
REPUBLIC OF MALDIVES,
PHONE:+ (960) 332 6822,FAX: + (960) 333 2835
E-MAIL: design.development@mtcc.com.mv

PROJECT TITLE	MID HOSPITAL PROJECT
DRAWING TITLE	AS GIVEN
CLIENT & ADDRESS	MINISTRY OF HEALTH
PROJECT LOCATION	-
DESIGN ARCHITECT:	SURVEYING, DESIGN AND DEVELOPMENT SECTION
ENGINEER:	IBRAHIM THOAM
STRUCTURAL CHECKER:	ABDULLA RAMEEZ
ARCHITECT:	AMINATH ZOONA
ARCHITECTURAL CHECKER:	IRFAN WAHEED
PAPER	A3
SCALE	AS GVN
DRAWN BY:	AHMED IMAD
CHECKED BY:	AMINATH SAMAHA
DATE	02-07-2020

REV	DESCRIPTION	DATE	APPR

SHEET IDENTIFICATION NUMBER

S5.03

SHEET TITLE

74

COPYRIGHT All plans, sketches, drawings, graphic representations and specifications prepared by the Architect(s) & Engineer(s) are instruments of service. The copyright and ownership of both the design and these instruments of service belong to the Architect(s) & Engineer(s) and may not be used for any other project, or sold, or offered for sale by any party other than the Architect/Engineer unless the Architect/Engineer has given written consent. Copies of the documents submitted to the client prepared by the Architect/Engineer maybe used as they were intended; once; and on the same site and project.

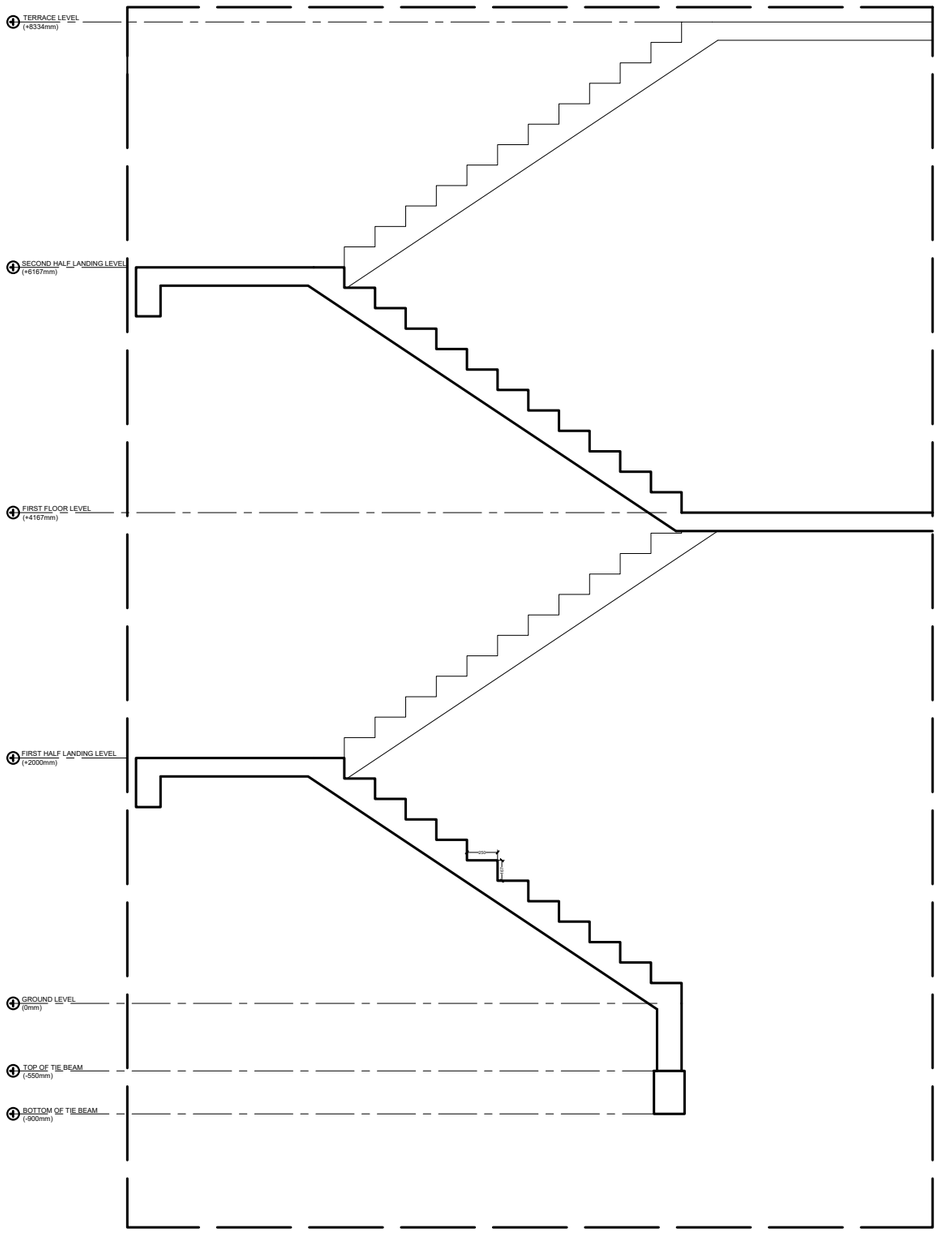

STAIRCASE DETAILS

SCALE 1:50

0 0.25 0.5 1 2 METERS

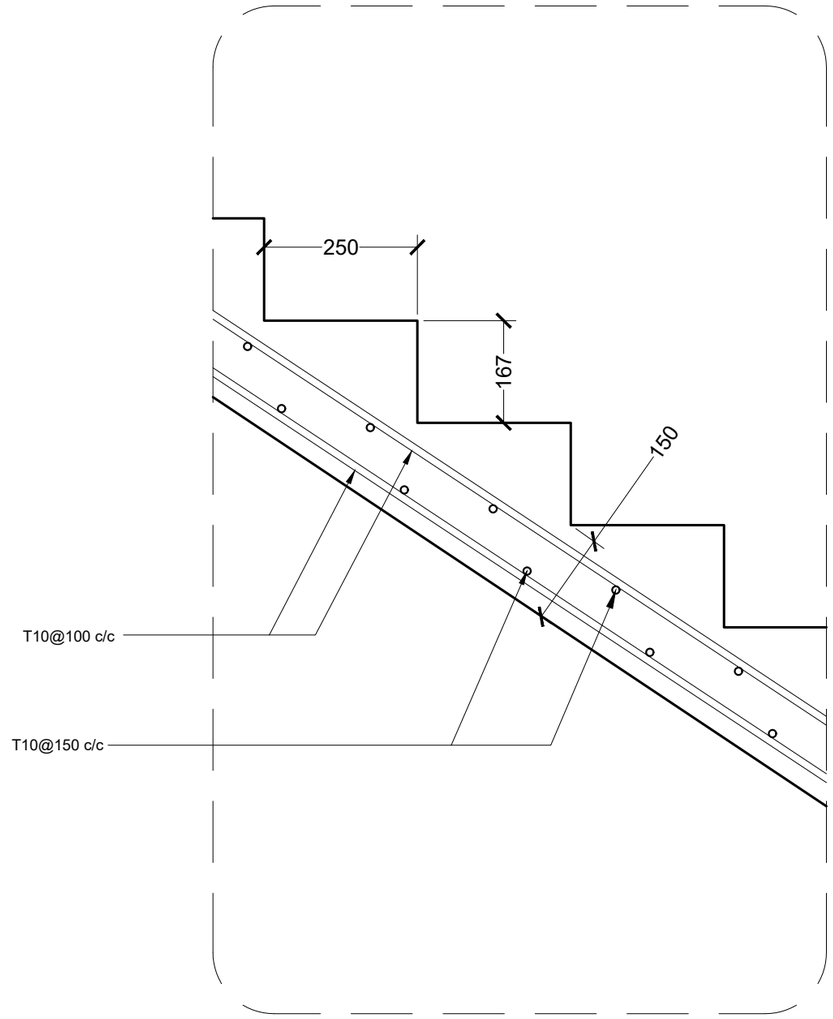

STAIRCASE REINFORCEMENT DETAIL

SCALE 1:10

0 0.05 0.1 0.2 0.4 METERS

M T C C
MALDIVES TRANSPORT & CONTRACTING COMPANY PLC
SURVEY,DESIGN AND DEVELOPMENT SECTION
CONSTRUCTION AND PROJECTS MANGEMENT DEPARTMENT,
MTCC TOWER, BODU THAKURUFAANU MAGU, MALE 20181,
REPUBLIC OF MALDIVES,
PHONE: (+960) 332 6822 FAX: (+960) 333 2835
E-MAIL: design.development@mtcc.com.mv

PROJECT TITLE	MID HOSPITAL PROJECT
DRAWING TITLE	AS GIVEN
CLIENT & ADDRESS	MINISTRY OF HEALTH
PROJECT LOCATION	-
DESIGN ARCHITECT:	SURVEYING, DESIGN AND DEVELOPMENT SECTION
ENGINEER:	IBRAHIM THOAM
STRUCTURAL CHECKER:	ABDULLA RAMEEZ
ARCHITECT:	AMINATH ZOONA
ARCHITECTURAL CHECKER:	IRFAN WAHEED
PAPER	A3
SCALE	AS GVN
DRAWN BY:	AHMED IMAD
CHECKED BY:	AMINATH SAMAHA
DATE	02-07-2020

REV	DESCRIPTION	DATE	APPR

SHEET IDENTIFICATION NUMBER

S5.04

SHEET TITLE

75

COPYRIGHT All plans, sketches, drawings, graphic representations and specifications prepared by the Architect(s) & Engineer(s) are instruments of service. The copyright and ownership of both the design and these instruments of service belong to the Architect(s) & Engineer(s) and may not be used for any other project, or sold, or offered for sale by any party other than the Architect/Engineer unless the Architect/Engineer has given written consent. Copies of the documents submitted to the client prepared by the Architect/Engineer maybe used as they were intended; once; and on the same site and project.

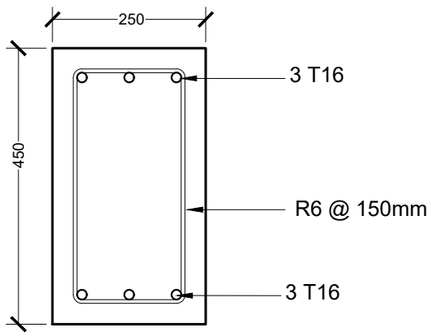

TIE BEAM - TB

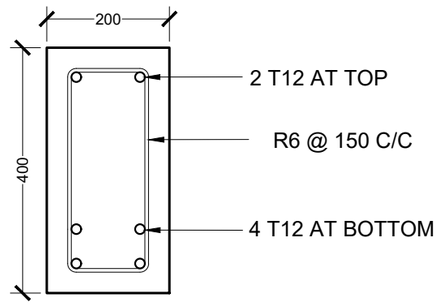

STAIR HALF LANDING BEAM

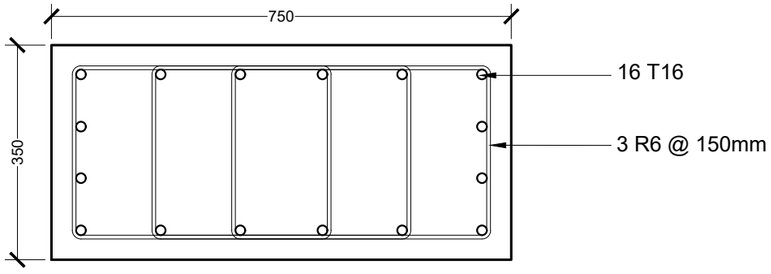

COLUMN - C1

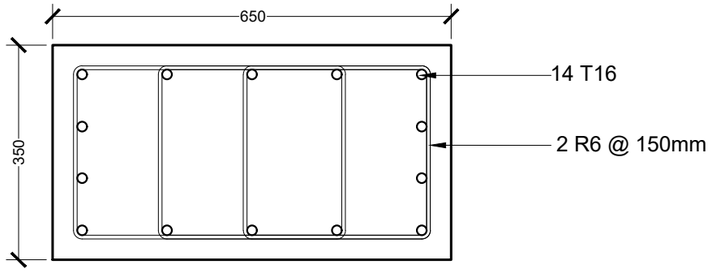

COLUMN - C2

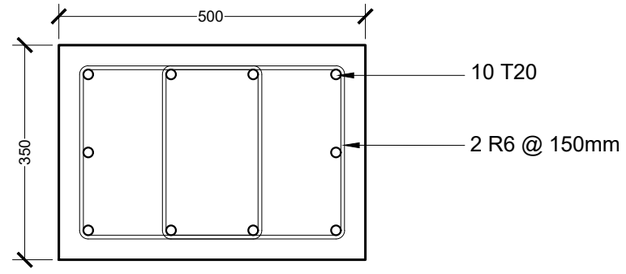

COLUMN - C3

NOTES:

MINIMUM COVER TO REINFORCEMENT:

FOUNDATION	= 50mm
SLAB	= 25mm
BEAMS	= 35mm
COLUMNS	= 40mm
ANCHOR BARS	= 55 X DIA
LAPS	= 45 X DIA
MID BARS	= 0.85 X SPAN
SUPPORT BARS	= 1/3 X SPAN

REINFORCEMENT DETAIL

SCALE 1:10

0 0.05 0.1 0.2 0.4 METERS

M T C C
MALDIVES TRANSPORT & CONTRACTING COMPANY PLC
SURVEY,DESIGN AND DEVELOPMENT SECTION
CONSTRUCTION AND PROJECTS MANGEMENT DEPARTMENT,
MTCC TOWER, BODU THAKURUFAANU MAGU, MALE 20181,
REPUBLIC OF MALDIVES.
PHONE: +(960) 332 6822,FAX: +(960) 333 2835
E-MAIL: design.development@mtcc.com.mv

PROJECT TITLE	MID HOSPITAL PROJECT
DRAWING TITLE	AS GIVEN
CLIENT & ADDRESS	MINISTRY OF HEALTH
PROJECT LOCATION	-
DESIGN ARCHITECT:	SURVEYING, DESIGN AND DEVELOPMENT SECTION
ENGINEER:	IBRAHIM THOAM
STRUCTURAL CHECKER:	ABDULLA RAMEEZ
ARCHITECT:	AMINATH ZOONA
ARCHITECTURAL CHECKER:	IRFAN WAHEED
PAPER	A3
SCALE	AS GVN
DRAWN BY:	AHMED IMAD
CHECKED BY:	AMINATH SAMAHA
DATE	02-07-2020

REV	DESCRIPTION	DATE	APPR

SHEET IDENTIFICATION NUMBER

S5.05

SHEET TITLE

76

COPYRIGHT All plans, sketches, drawings, graphic representations and specifications prepared by the Architect(s) & Engineer(s) are instruments of service. The copyright and ownership of both the design and these instruments of service belong to the Architect(s) & Engineer(s) and may not be used for any other project, or sold, or offered for sale by any party other than the Architect/Engineer unless the Architect/Engineer has given written consent. Copies of the documents submitted to the client prepared by the Architect/Engineer maybe used as they were intended; once; and on the same site and project.

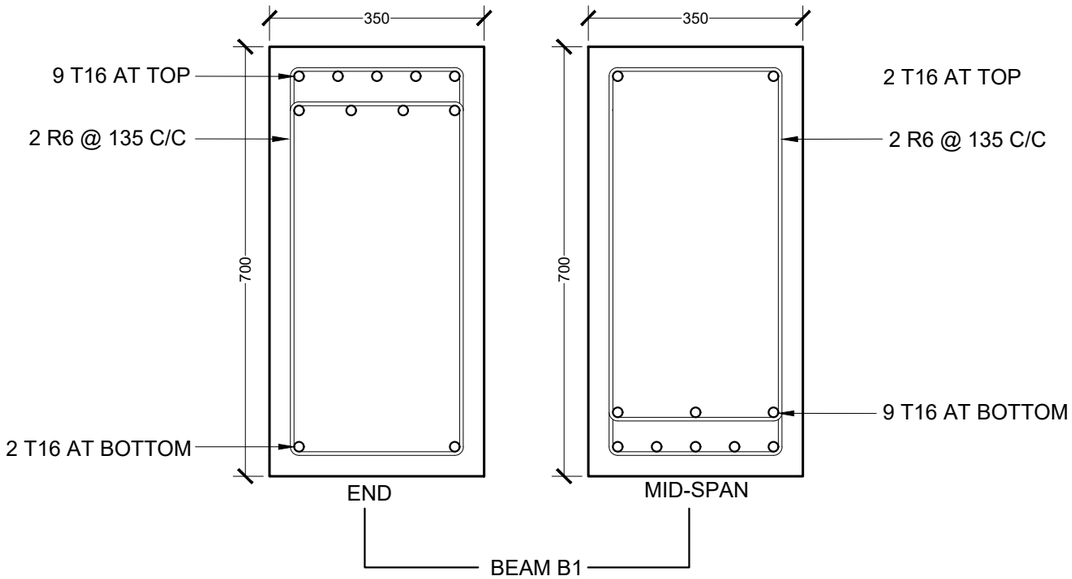

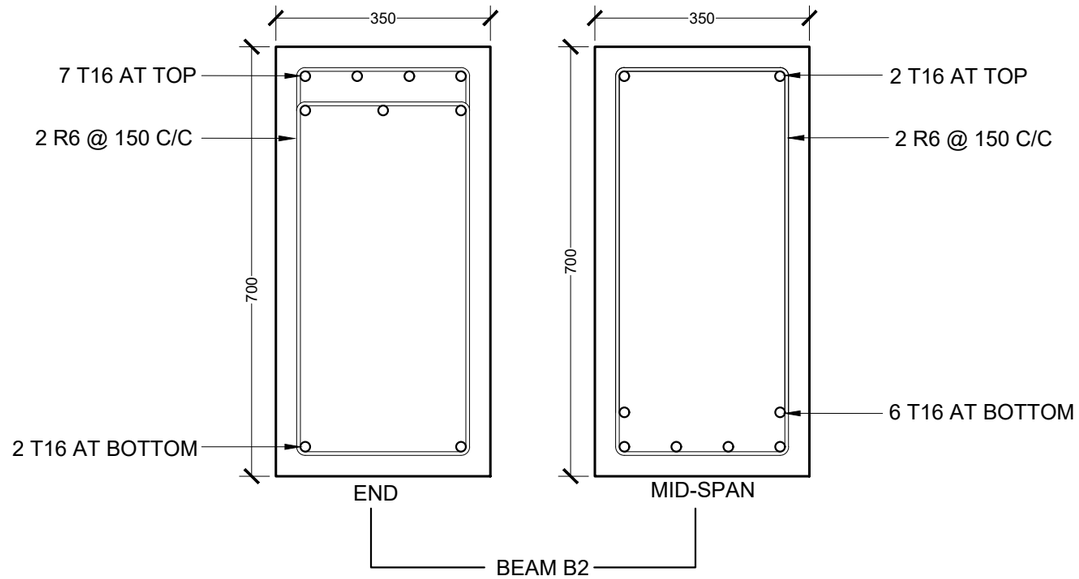

REINFORCEMENT DETAIL

SCALE 1:10

0 0.05 0.1 0.2 0.4 METERS

NOTES:

MINIMUM COVER TO REINFORCEMENT:

FOUNDATION	= 50mm
SLAB	= 25mm
BEAMS	= 35mm
COLUMNS	= 40mm
ANCHOR BARS	= 55 X DIA
LAPS	= 45 X DIA
MID BARS	= 0.85 X SPAN
SUPPORT BARS	= 1/3 X SPAN

M T C C
MALDIVES TRANSPORT & CONTRACTING COMPANY PLC
SURVEY,DESIGN AND DEVELOPMENT SECTION
CONSTRUCTION AND PROJECTS MANGEMENT DEPARTMENT,
MTCC TOWER, BODU THAKURUFAANU MAGU, MALE 20181,
REPUBLIC OF MALDIVES.
PHONE: +(960) 332 6822,FAX: +(960) 333 2835
E-MAIL: design.development@mtcc.com.mv

PROJECT TITLE: MID HOSPITAL PROJECT

DRAWING TITLE: AS GIVEN

CLIENT & ADDRESS: MINISTRY OF HEALTH

PROJECT LOCATION: -

DESIGN ARCHITECT: SURVEYING, DESIGN AND DEVELOPMENT SECTION

ENGINEER: IBRAHIM THOAM

STRUCTURAL CHECKER: ABDULLA RAMEEZ

ARCHITECT: AMINATH ZOONA

ARCHITECTURAL CHECKER: IRFAN WAHEED

PAPER: A3

SCALE: AS GVN

DRAWN BY: AHMED IMAD

CHECKED BY: AMINATH SAMAHA

DATE: 02-07-2020

REV	DESCRIPTION	DATE	APPR

SHEET IDENTIFICATION NUMBER: S5.06

SHEET TITLE: 77

COPYRIGHT All plans, sketches, drawings, graphic representations and specifications prepared by the Architect(s) & Engineer(s) are instruments of service. The copyright and ownership of both the design and these instruments of service belong to the Architect(s) & Engineer(s) and may not be used for any other project, or sold, or offered for sale by any party other than the Architect/Engineer unless the Architect/Engineer has given written consent. Copies of the documents submitted to the client prepared by the Architect/Engineer maybe used as they were intended; once; and on the same site and project.

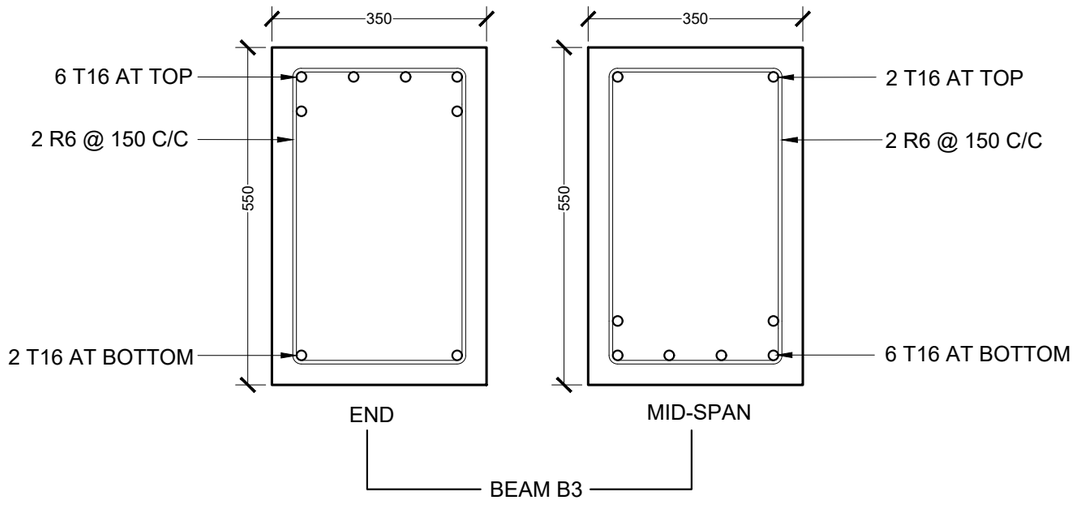

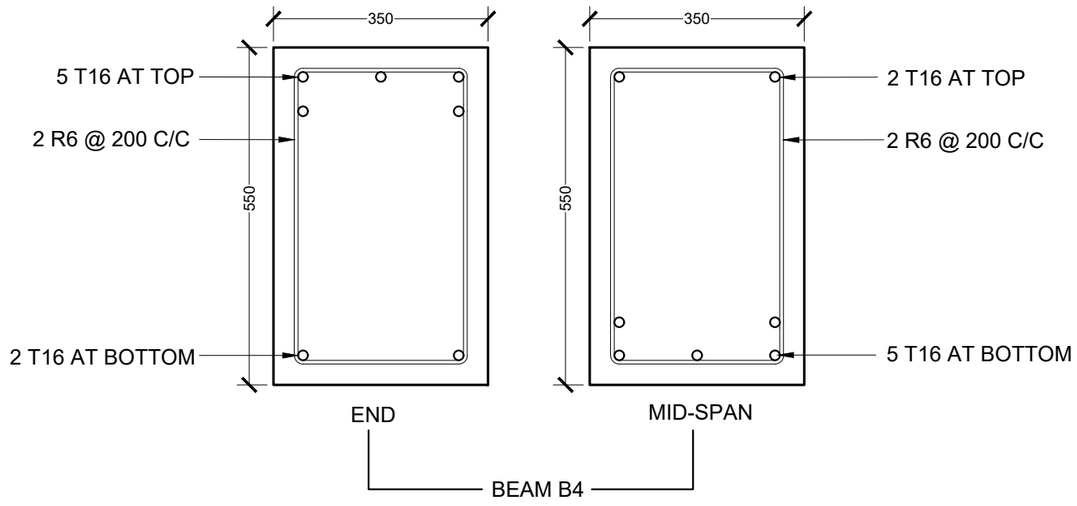

REINFORCEMENT DETAIL

SCALE 1:10

0 0.05 0.1 0.2 0.4 METERS

NOTES:

MINIMUM COVER TO REINFORCEMENT:

FOUNDATION	= 50mm
SLAB	= 25mm
BEAMS	= 35mm
COLUMNS	= 40mm
ANCHOR BARS	= 55 X DIA
LAPS	= 45 X DIA
MID BARS	= 0.85 X SPAN
SUPPORT BARS	= 1/3 X SPAN

M T C C
MALDIVES TRANSPORT & CONTRACTING COMPANY PLC
SURVEY,DESIGN AND DEVELOPMENT SECTION
CONSTRUCTION AND PROJECTS MANAGEMENT DEPARTMENT,
MTCC TOWER, BODU THAKURUFAANU MAGU, MALE' 20181,
REPUBLIC OF MALDIVES.
PHONE: + (960) 332 6822 FAX : + (960) 333 2835
E-MAIL: design.development@mtcc.com.mv

PROJECT TITLE: MID HOSPITAL PROJECT

DRAWING TITLE: AS GIVEN

CLIENT & ADDRESS: MINISTRY OF HEALTH

PROJECT LOCATION: -

DESIGN ARCHITECT: SURVEYING, DESIGN AND DEVELOPMENT SECTION

ENGINEER: IBRAHIM THOAM

STRUCTURAL CHECKER: ABDULLA RAMEEZ

ARCHITECT: AMINATH ZOONA

ARCHITECTURAL CHECKER: IRFAN WAHEED

PAPER: A3

SCALE: AS GVN

DRAWN BY: AHMED IMAD

CHECKED BY: AMINATH SAMAHA

DATE: 02-07-2020

REV	DESCRIPTION	DATE	APPR

SHEET IDENTIFICATION NUMBER: S5.07

SHEET TITLE: 78

COPYRIGHT All plans, sketches, drawings, graphic representations and specifications prepared by the Architect(s) & Engineer(s) are instruments of service. The copyright and ownership of both the design and these instruments of service belong to the Architect(s) & Engineer(s) and may not be used for any other project, or sold, or offered for sale by any party other than the Architect/Engineer unless the Architect/Engineer has given written consent. Copies of the documents submitted to the client prepared by the Architect/Engineer maybe used as they were intended; once; and on the same site and project.

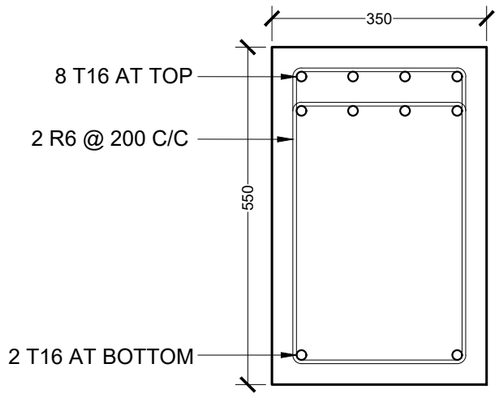

BEAM B5 AND RB1 - RB10

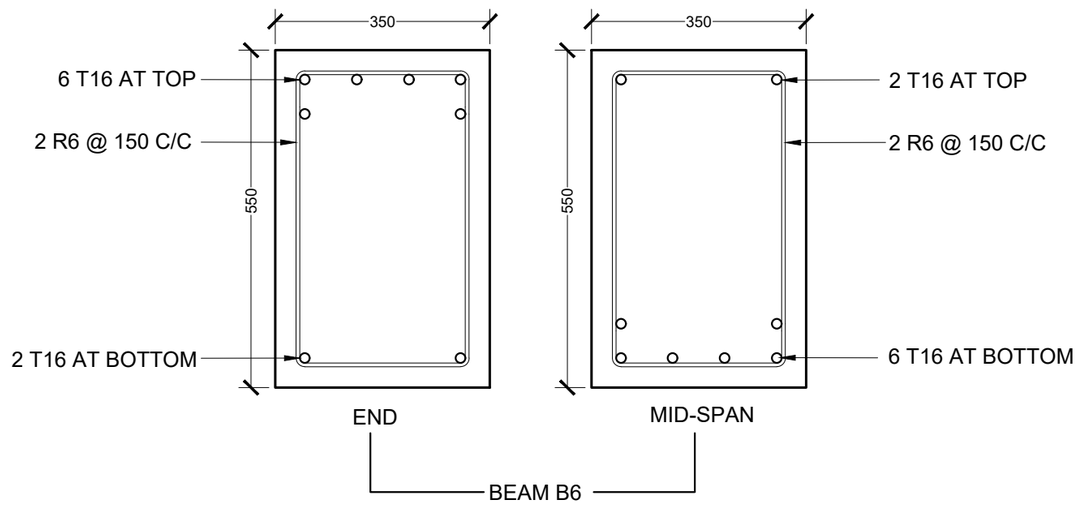

BEAM B6

REINFORCEMENT DETAIL

SCALE 1:10

0 0.05 0.1 0.2 0.4 METERS

NOTES:

MINIMUM COVER TO REINFORCEMENT:

FOUNDATION	= 50mm
SLAB	= 25mm
BEAMS	= 35mm
COLUMNS	= 40mm
ANCHOR BARS	= 55 X DIA
LAPS	= 45 X DIA
MID BARS	= 0.85 X SPAN
SUPPORT BARS	= 1/3 X SPAN

M T C C
MALDIVES TRANSPORT & CONTRACTING COMPANY PLC
SURVEY,DESIGN AND DEVELOPMENT SECTION
CONSTRUCTION AND PROJECTS MANGEMENT DEPARTMENT,
MTCC TOWER, BODU THAKURUFAANU MAGU, MALE' 20181,
REPUBLIC OF MALDIVES.
PHONE: +(960) 332 6822,FAX: +(960) 333 2835
E-MAIL: design.development@mtcc.com.mv

PROJECT TITLE	MID HOSPITAL PROJECT
DRAWING TITLE	AS GIVEN
CLIENT & ADDRESS	MINISTRY OF HEALTH
PROJECT LOCATION	-
DESIGN ARCHITECT:	SURVEYING, DESIGN AND DEVELOPMENT SECTION
ENGINEER:	IBRAHIM THOAM
STRUCTURAL CHECKER:	ABDULLA RAMEEZ
ARCHITECT:	AMINATH ZOONA
ARCHITECTURAL CHECKER:	IRFAN WAHEED
PAPER	A3
SCALE	AS GVN
DRAWN BY:	AHMED IMAD
CHECKED BY:	AMINATH SAMAHA
DATE	02-07-2020

REV	DESCRIPTION	DATE	APPR

SHEET IDENTIFICATION NUMBER

S5.08

SHEET TITLE

79

COPYRIGHT All plans, sketches, drawings, graphic representations and specifications prepared by the Architect(s) & Engineer(s) are instruments of service. The copyright and ownership of both the design and these instruments of service belong to the Architect(s) & Engineer(s) and may not be used for any other project, or sold, or offered for sale by any party other than the Architect/Engineer unless the Architect/Engineer has given written consent. Copies of the documents submitted to the client prepared by the Architect/Engineer maybe used as they were intended; once; and on the same site and project.

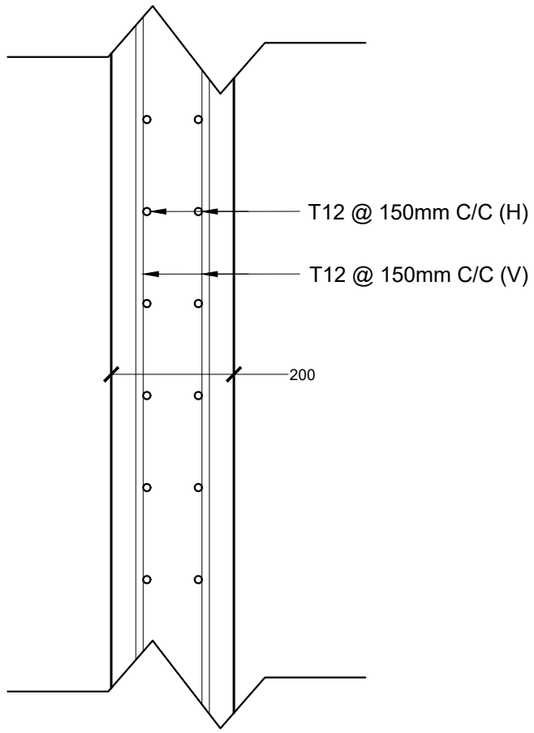

ELEVATOR SHAFT WALL

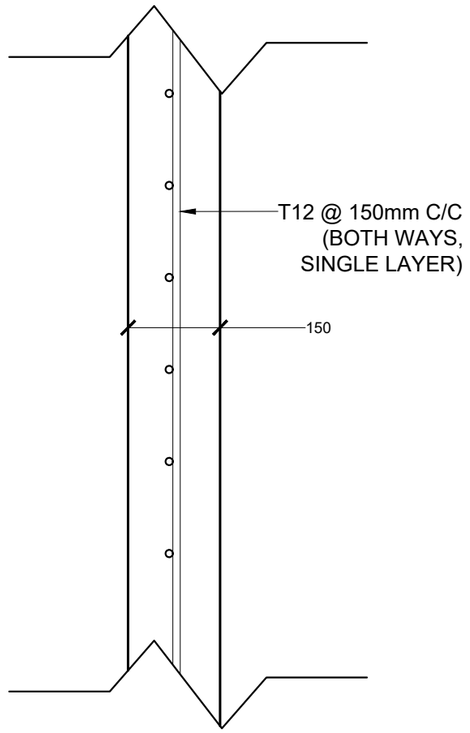

TERRACE PARAPET WALL

REINFORCEMENT DETAIL

SCALE 1:10

0 0.05 0.1 0.2 0.4 METERS

M T C C
MALDIVES TRANSPORT & CONTRACTING COMPANY PLC
SURVEY,DESIGN AND DEVELOPMENT SECTION
CONSTRUCTION AND PROJECTS MANGEMENT DEPARTMENT,
MTCC TOWER, BODU THAKURUFAANU MAGU, MALE 20181,
REPUBLIC OF MALDIVES.
PHONE: +(960) 332 6822,FAX: +(960) 333 2835
E-MAIL: design.development@mtcc.com.mv

PROJECT TITLE: MID HOSPITAL PROJECT

DRAWING TITLE: AS GIVEN

CLIENT & ADDRESS: MINISTRY OF HEALTH

PROJECT LOCATION: -

DESIGN ARCHITECT: SURVEYING, DESIGN AND DEVELOPMENT SECTION

ENGINEER: IBRAHIM THOAM

STRUCTURAL CHECKER: ABDULLA RAMEEZ

ARCHITECT: AMINATH ZOONA

ARCHITECTURAL CHECKER: IRFAN WAHEED

PAPER: A3

SCALE: AS GVN

DRAWN BY: AHMED IMAD

CHECKED BY: AMINATH SAMAHA

DATE: 02-07-2020

REV	DESCRIPTION	DATE	APPR

SHEET IDENTIFICATION NUMBER: S5.09

SHEET TITLE: 80

COPYRIGHT All plans, sketches, drawings, graphic representations and specifications prepared by the Architect(s) & Engineer(s) are instruments of service. The copyright and ownership of both the design and these instruments of service belong to the Architect(s) & Engineer(s) and may not be used for any other project, or sold, or offered for sale by any party other than the Architect/Engineer unless the Architect/Engineer has given written consent. Copies of the documents submitted to the client prepared by the Architect/Engineer maybe used as they were intended; once; and on the same site and project.

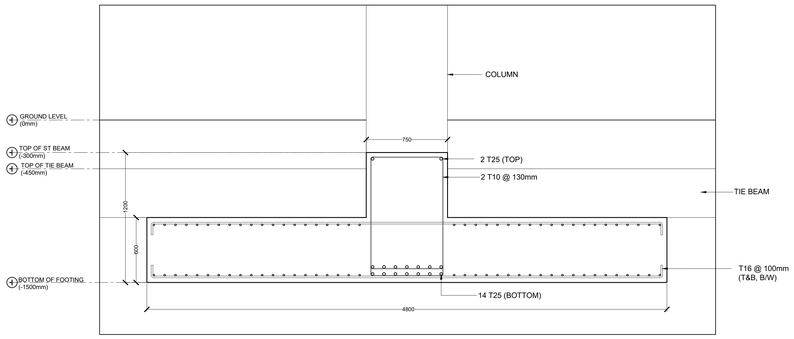

ST1 (INTERIOR SUPPORTS)

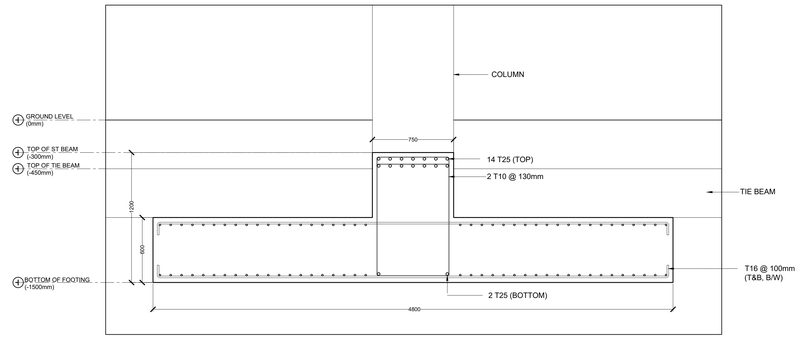

ST1 (MID-SPAN & EXTERIOR SUPPORTS)

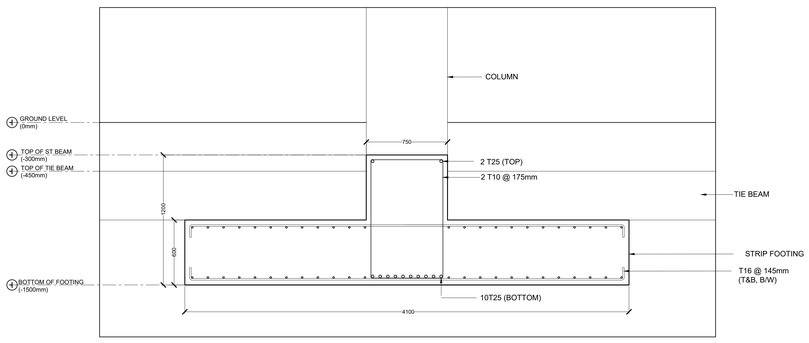

ST2 (INTERIOR SUPPORTS)

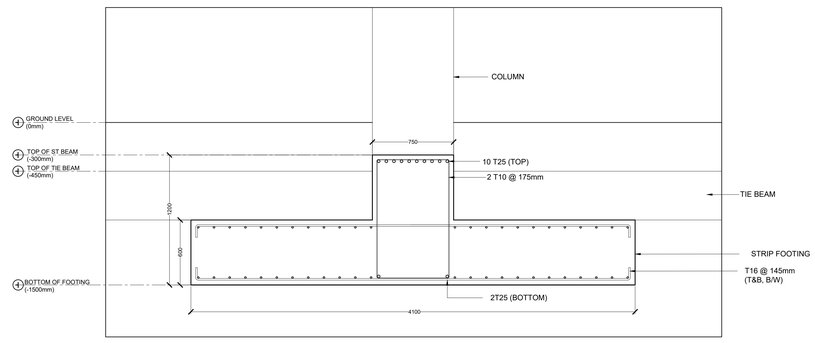

ST2 (MID-SPAN & EXTERIOR SUPPORTS)

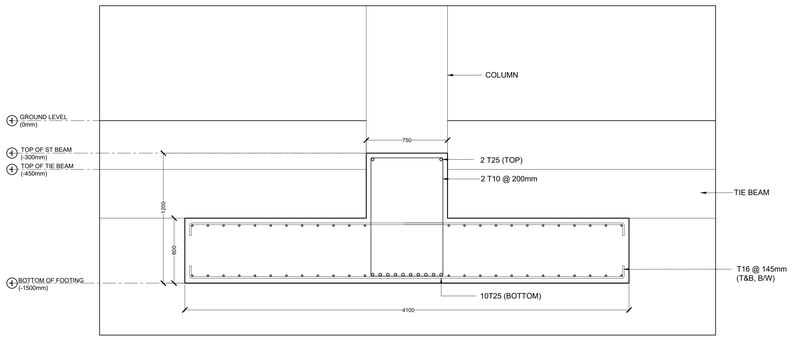

ST3 (INTERIOR SUPPORTS)

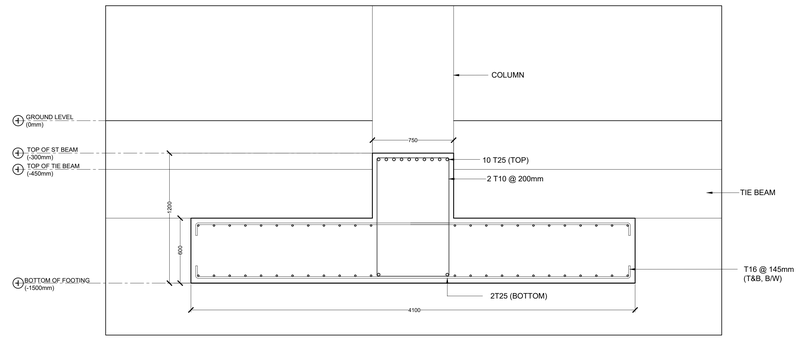

ST3 (MID-SPAN & EXTERIOR SUPPORTS)

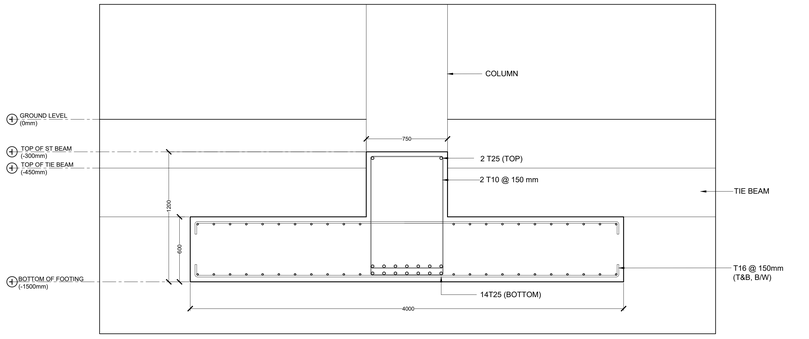

ST4 (INTERIOR SUPPORTS)

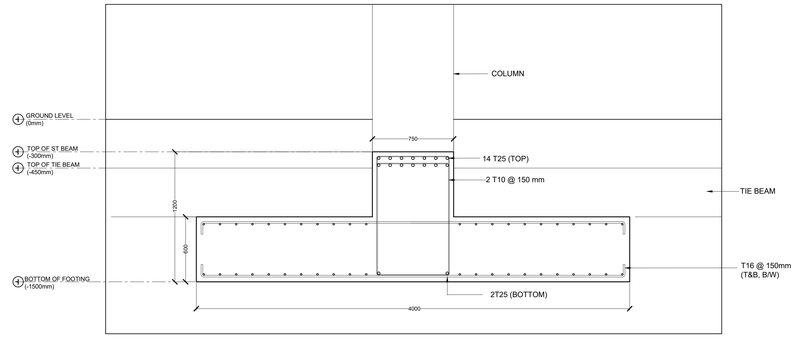

ST4 (MID-SPAN & EXTERIOR SUPPORTS)

STRIP FOOTING DETAILS

SCALE 1:20

0 0.5 1.0 1.5 2.0 METERS

S5.10

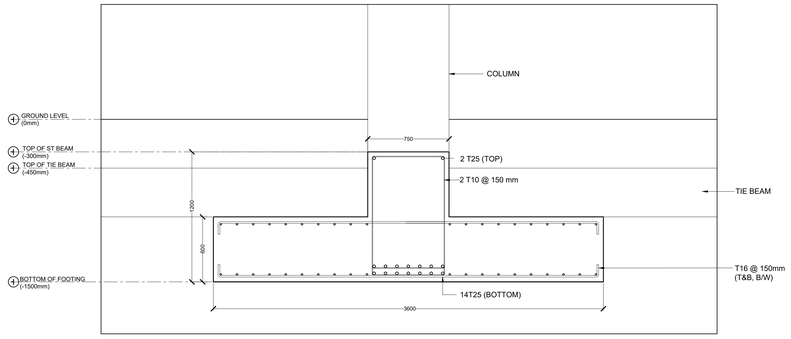

ST4 (INTERIOR SUPPORTS)

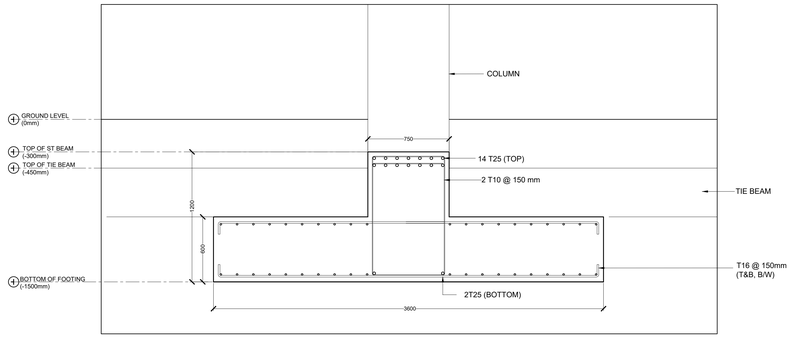

ST4 (MID-SPAN & EXTERIOR SUPPORTS)

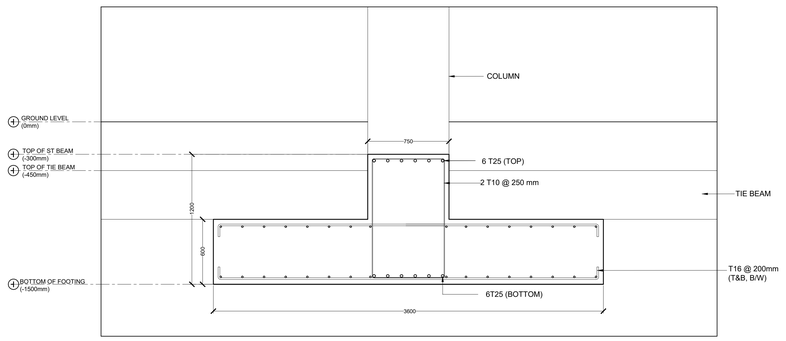

ST6 (THROUGHOUT)

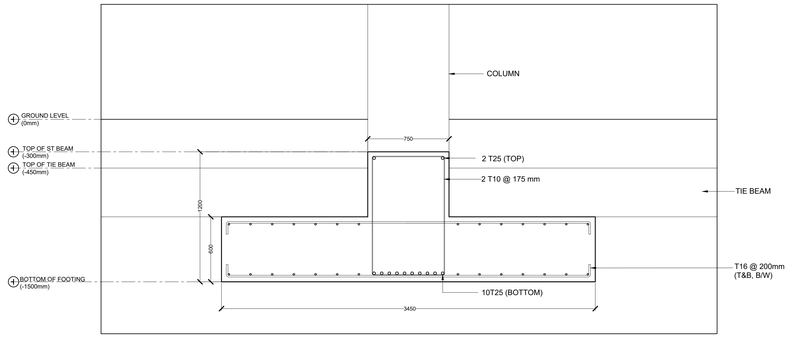

ST7 (INTERIOR SUPPORTS)

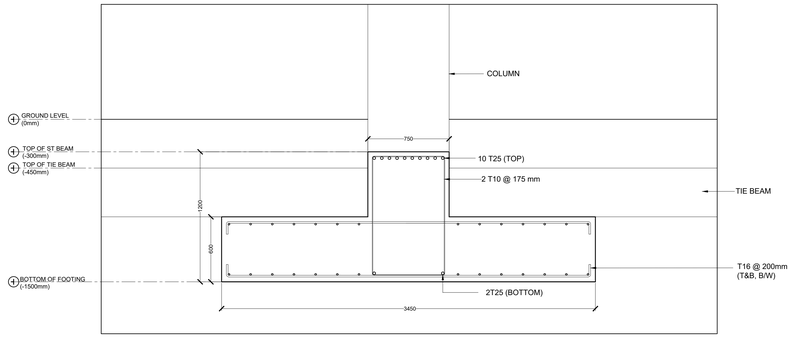

ST7 (MID-SPAN & EXTERIOR SUPPORTS)

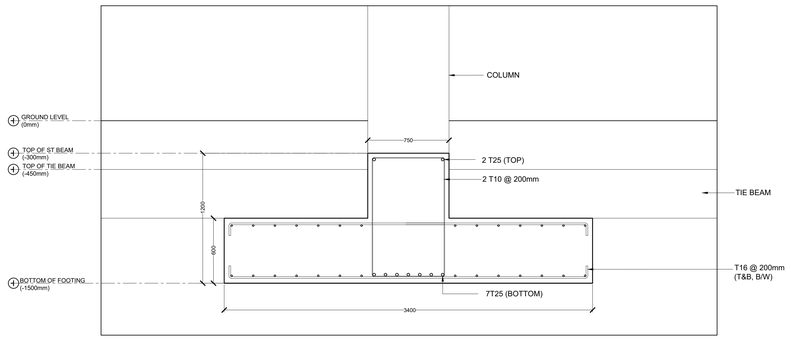

ST8 (CANTILEVER LENGTH)

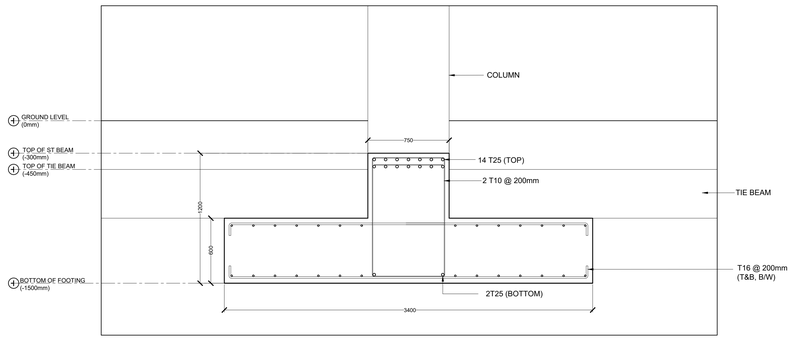

ST8 (MID-SPAN & EXTERIOR SUPPORTS)

STRIP FOOTING DETAILS

SCALE 1:20

0 0.2 0.4 0.6 0.8 1.0 METERS

S5.11

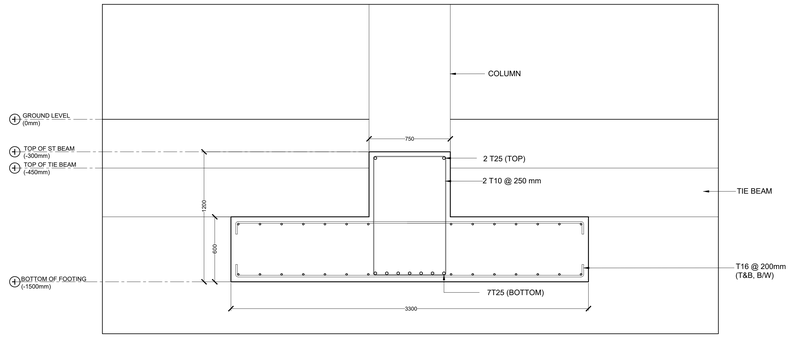

ST9 (INTERIOR SUPPORTS)

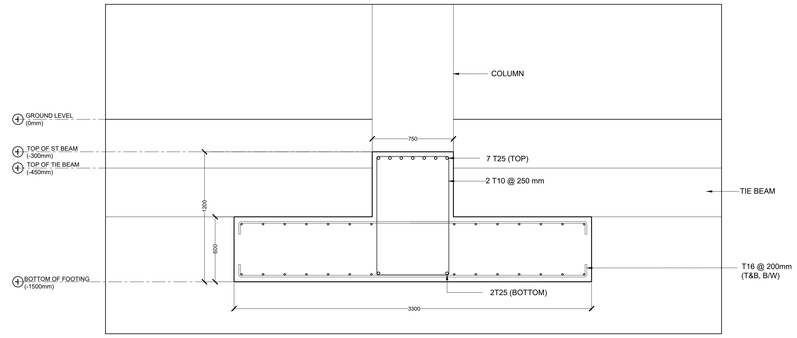

ST9 (MID-SPAN & EXTERIOR SUPPORTS)

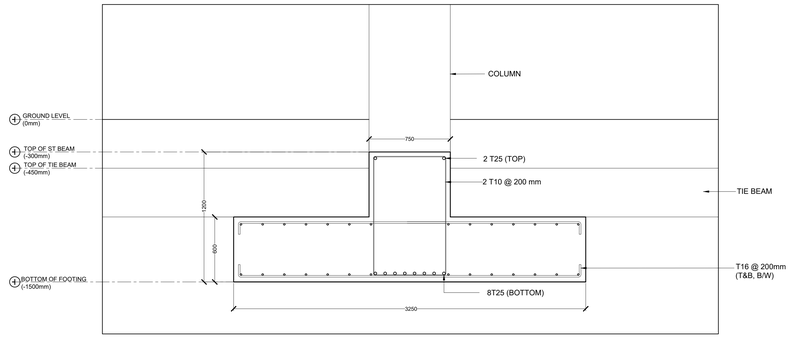

ST10 (INTERIOR SUPPORTS)

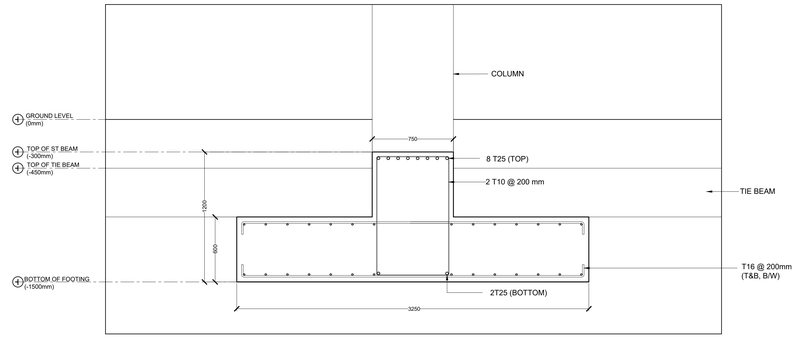

ST10 (MID-SPAN & EXTERIOR SUPPORTS)

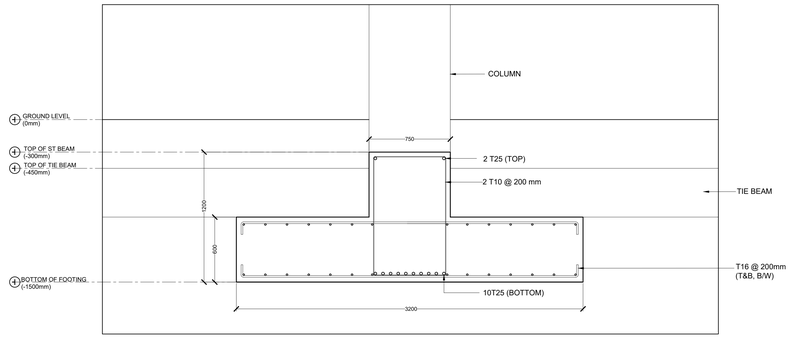

ST11 (INTERIOR SUPPORTS)

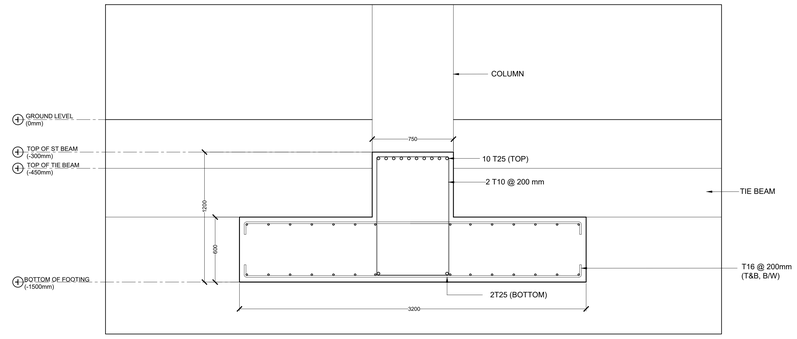

ST11 (MID-SPAN & EXTERIOR SUPPORTS)

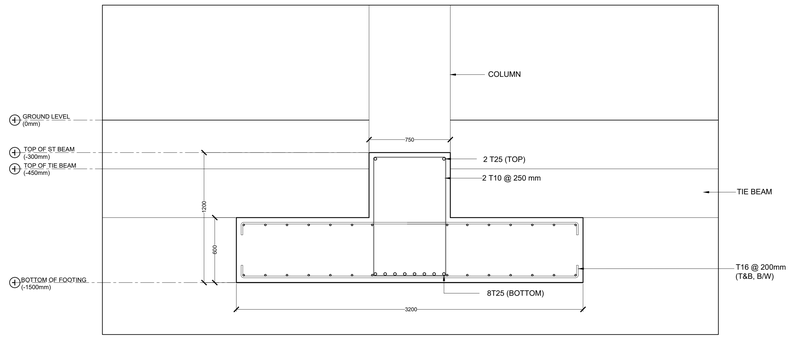

ST12 (INTERIOR SUPPORTS)

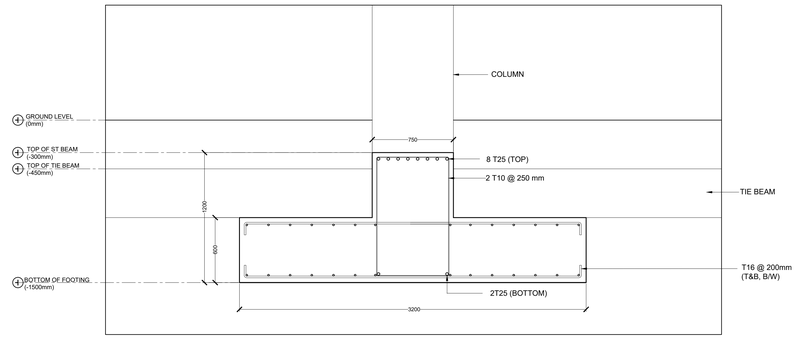

ST12 (MID-SPAN & EXTERIOR SUPPORTS)

STRIP FOOTING DETAILS

SCALE 1:20

0 0.5 1.0 1.5 METERS

S5.12

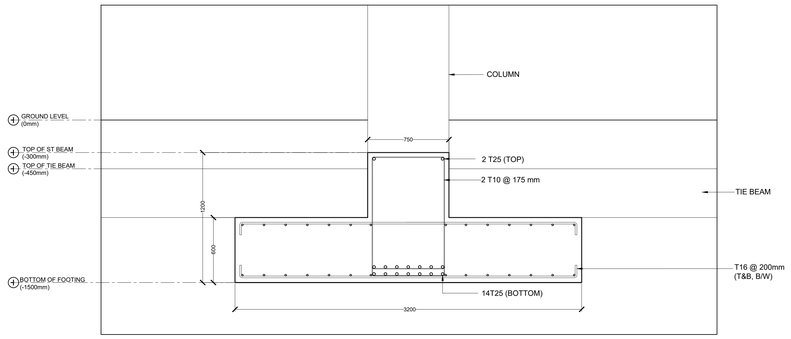

ST13 (INTERIOR SUPPORTS)

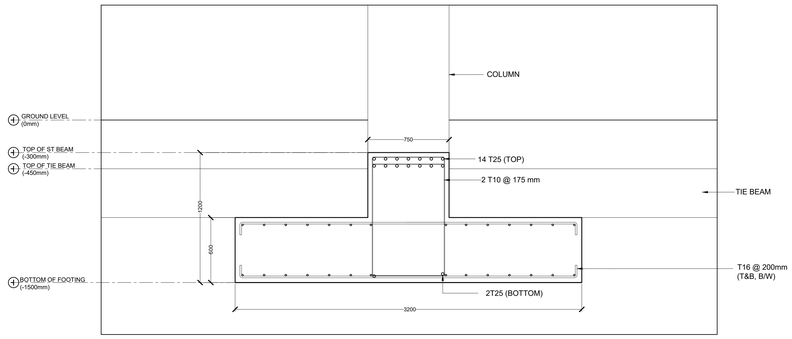

ST13 (MID-SPAN & EXTERIOR SUPPORTS)

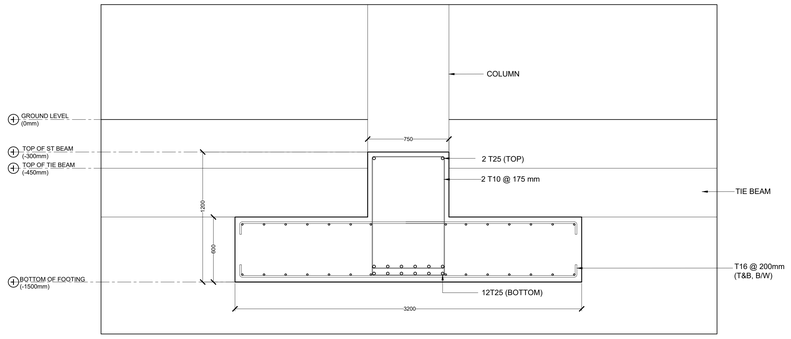

ST14 (INTERIOR SUPPORTS)

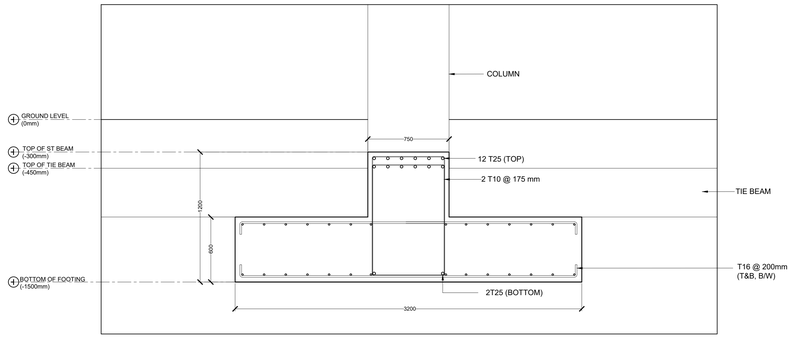

ST14 (MID-SPAN & EXTERIOR SUPPORTS)

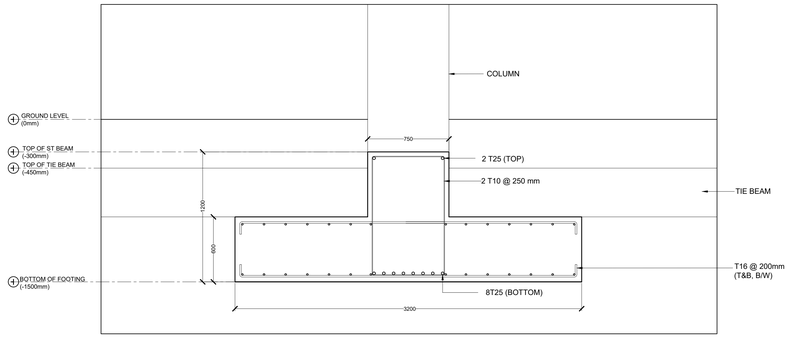

ST15 (INTERIOR SUPPORTS)

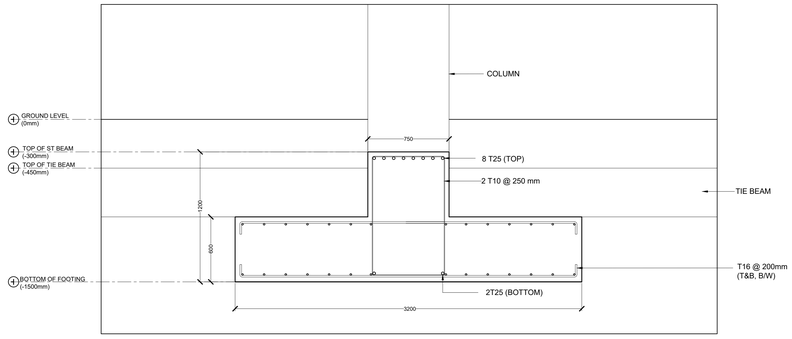

ST15 (MID-SPAN & EXTERIOR SUPPORTS)

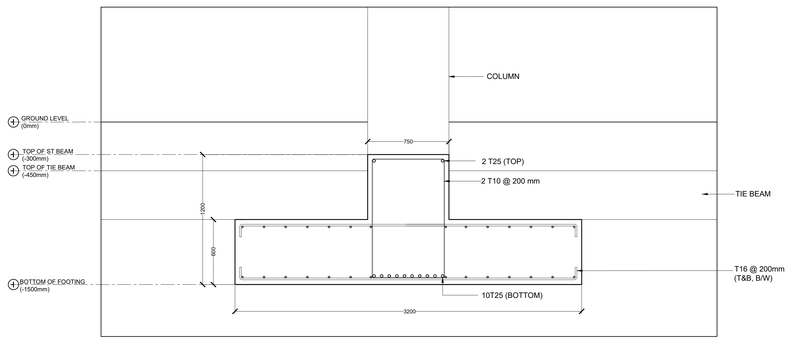

ST16 (INTERIOR SUPPORTS)

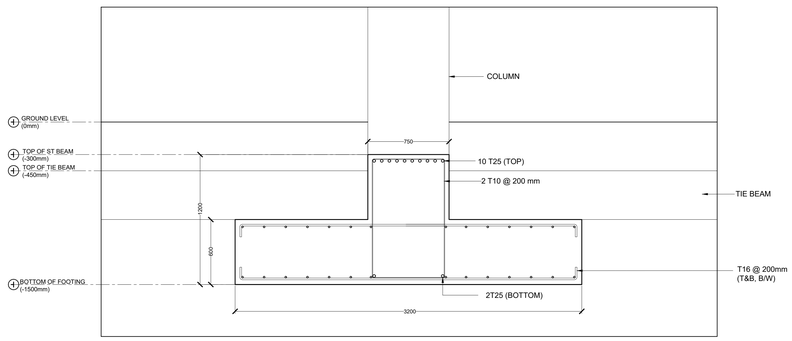

ST16 (MID-SPAN & EXTERIOR SUPPORTS)

STRIP FOOTING DETAILS

SCALE 1:20

0 0.5 1.0 1.5 2.0 METERS

DESIGNED BY	M.SHAH
DRAWN BY	M.SHAH
CHECKED BY	
DATE	
SCALE	
DRAWING NO.	S5.13
REV. NO.	

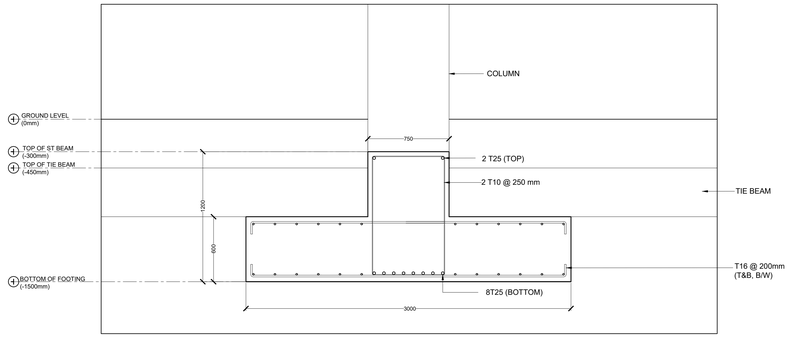

ST17 (INTERIOR SUPPORTS)

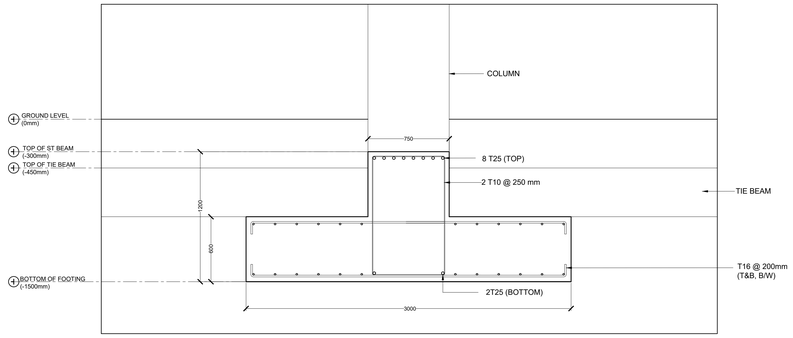

ST17 (MID-SPAN & EXTERIOR SUPPORTS)

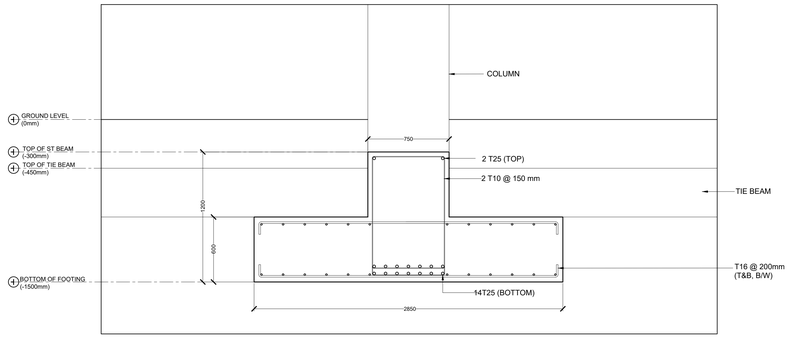

ST18 (INTERIOR SUPPORTS)

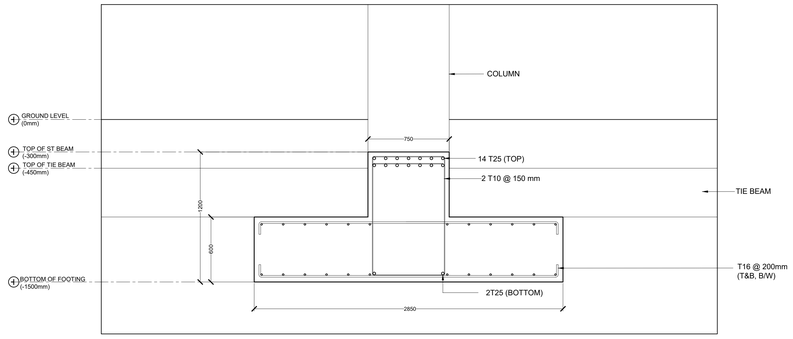

ST18 (MID-SPAN & EXTERIOR SUPPORTS)

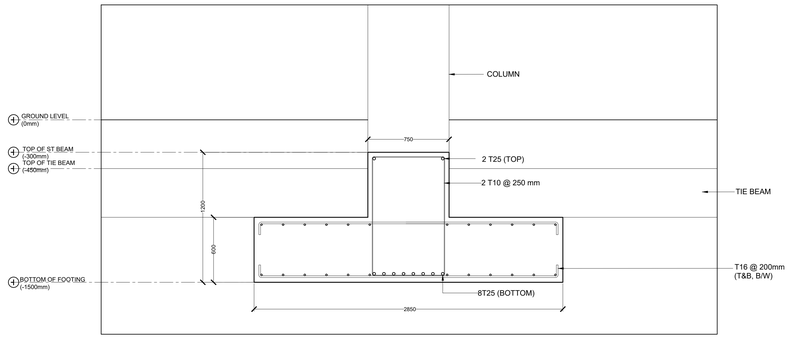

ST19 (INTERIOR SUPPORTS)

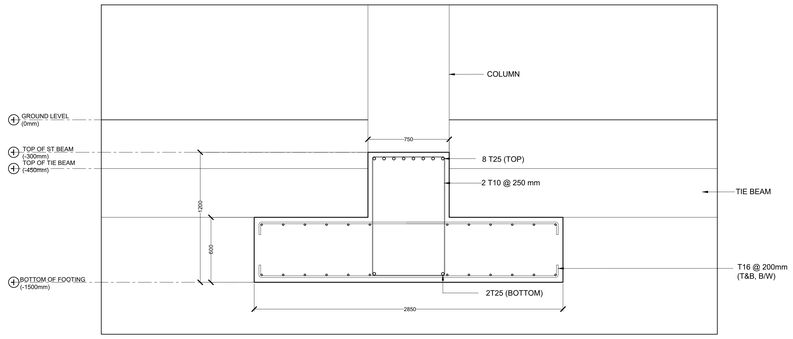

ST19 (MID-SPAN & EXTERIOR SUPPORTS)

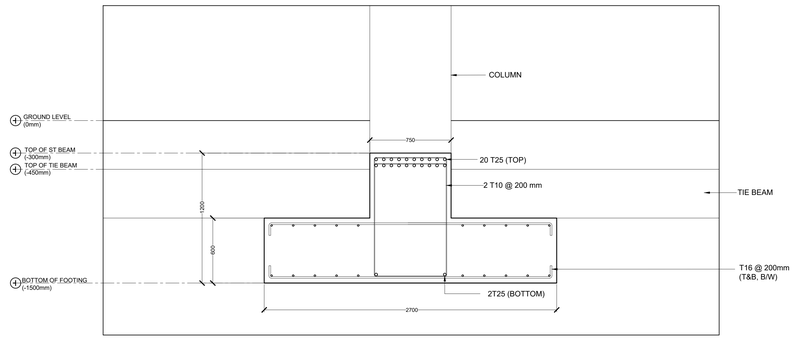

ST20 (THROUGHOUT)

STRIP FOOTING DETAILS

SCALE 1:20

0 0.5 1.0 1.5 2.0 METERS

ARCHITECTS

PROPOSED PROJECT
AT BARA

DRAWING NO.
S5.14

REVISION
REV/14

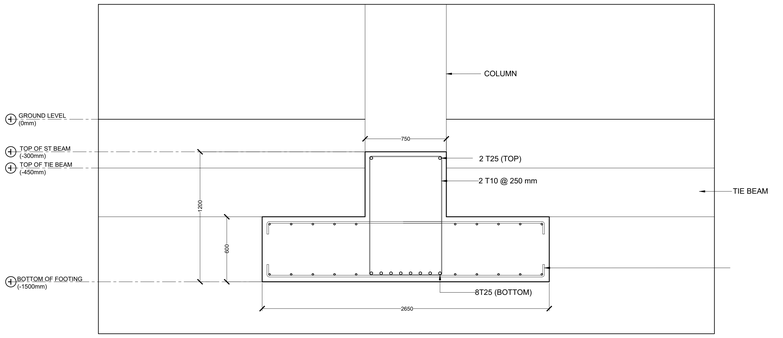

ST21 (INTERIOR SUPPORTS)

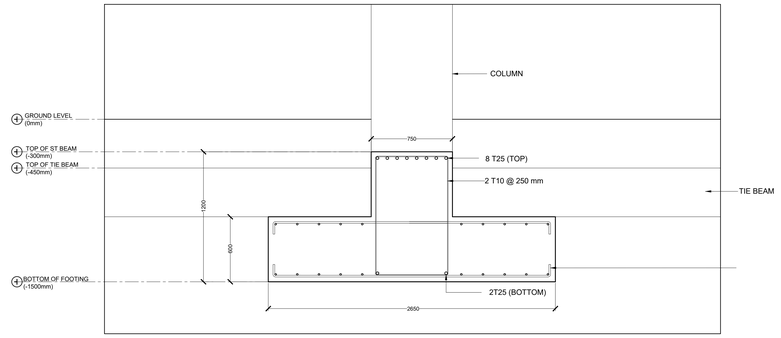

ST21 (MID-SPAN & EXTERIOR SUPPORTS)

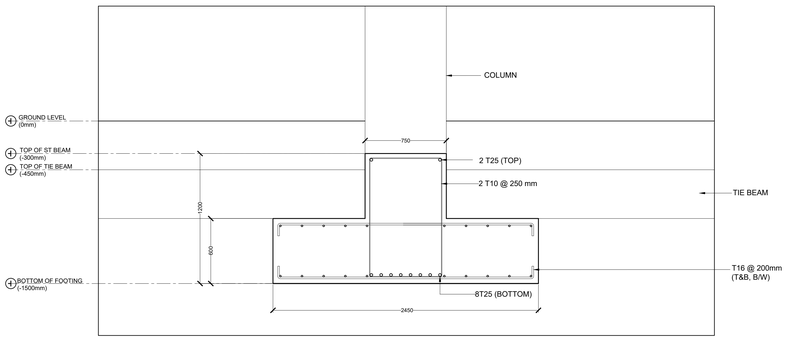

ST22 (INTERIOR SUPPORTS)

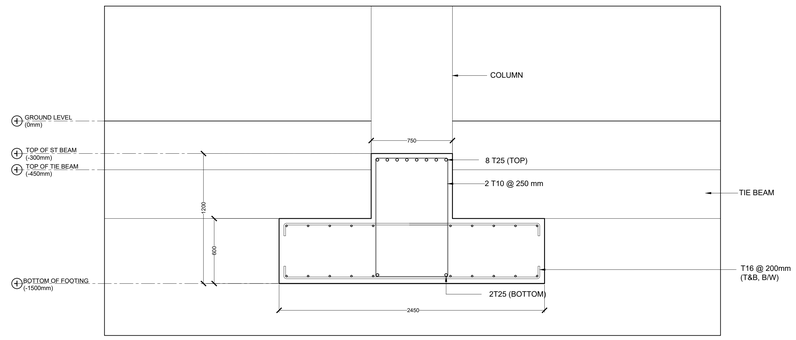

ST22 (MID-SPAN & EXTERIOR SUPPORTS)

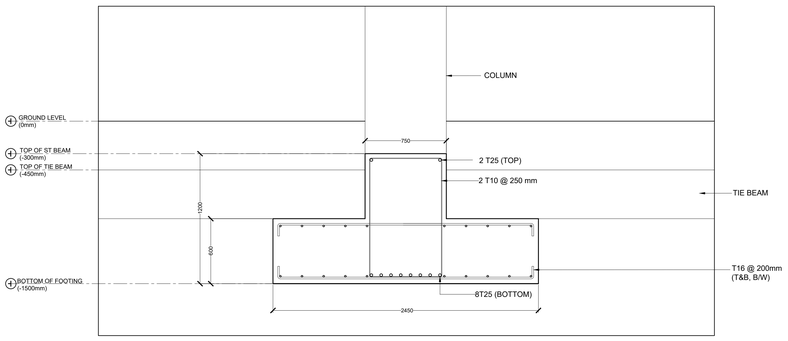

ST23 (INTERIOR SUPPORTS)

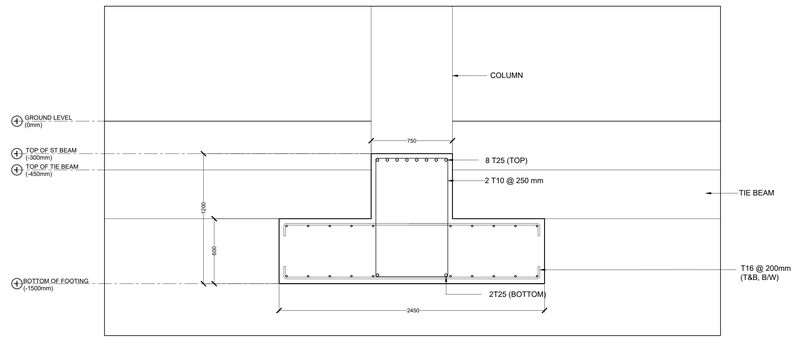

ST23 (MID-SPAN & EXTERIOR SUPPORTS)

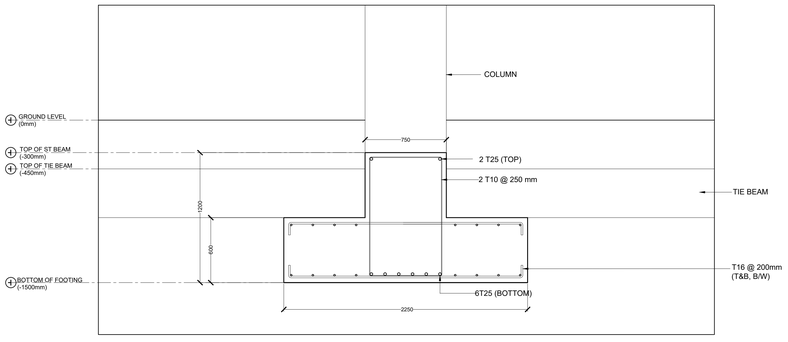

ST24 (INTERIOR SUPPORTS)

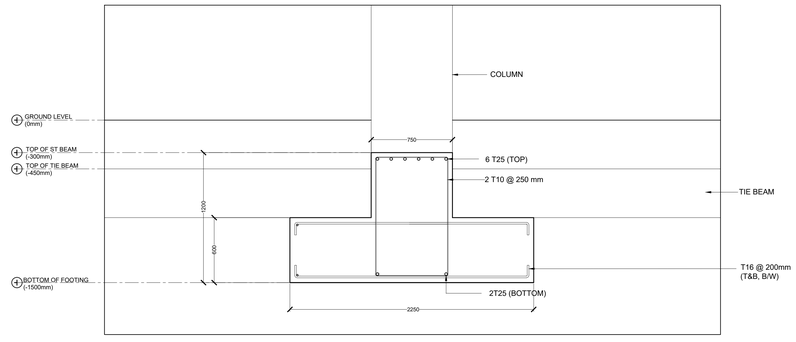

ST24 (MID-SPAN & EXTERIOR SUPPORTS)

STRIP FOOTING DETAILS

SCALE 1:20

0 0.5 1.0 1.5 2.0 2.5 METERS

ARCHITECTURAL PROJECT
ARCHITECTURAL PLANS
STRUCTURAL DESIGN AND DRAWINGS FOR THE PROPOSED CONSTRUCTION OF A 2 STOREY RESIDENTIAL BUILDING

SS 15

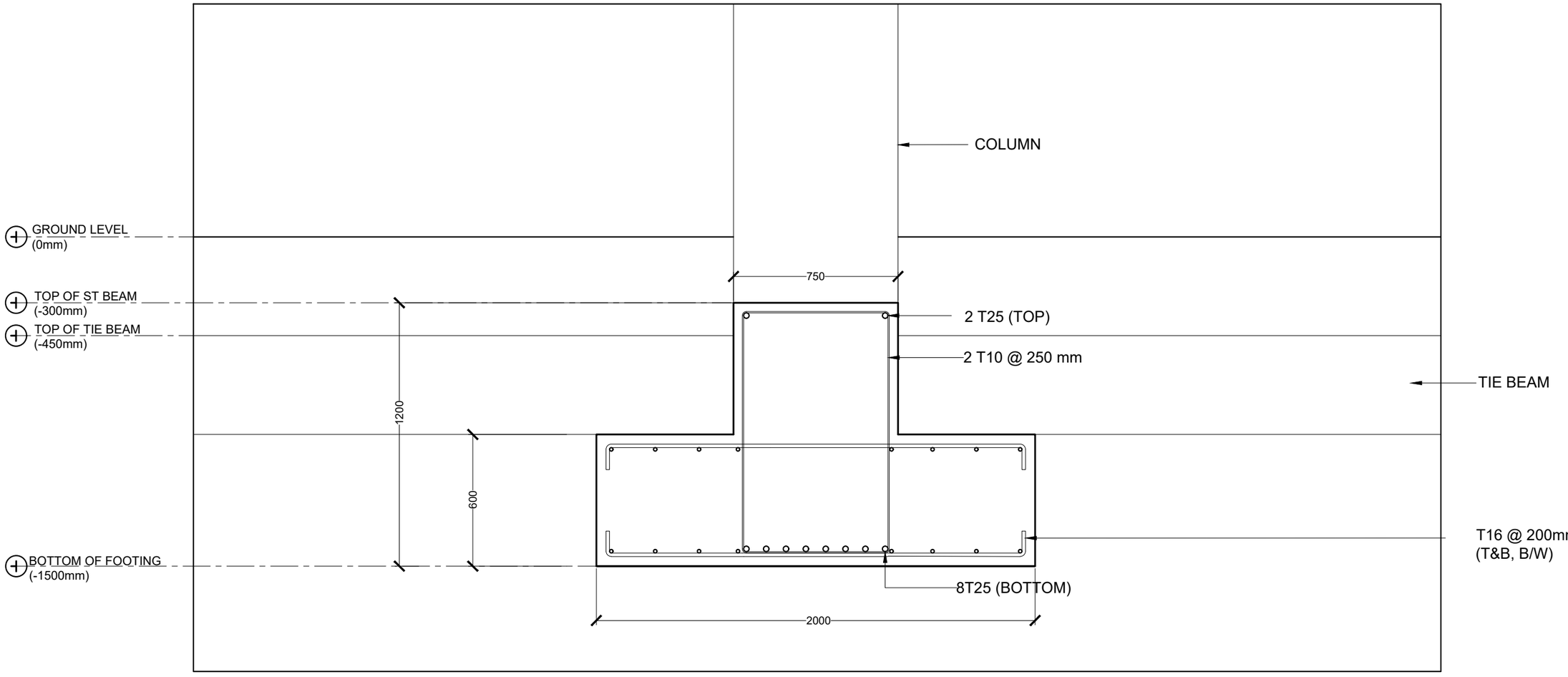

ST25 (INTERIOR SUPPORTS)

STRIP FOOTING DETAILS

SCALE 1:20

0 0.1 0.2 0.4 0.8 METERS

M T C C
MALDIVES TRANSPORT & CONTRACTING COMPANY PLC
SURVEY,DESIGN AND DEVELOPMENT SECTION
CONSTRUCTION AND PROJECTS MANAGEMENT DEPARTMENT,
MTCC TOWER, BODU THAKURUFAANU MAGU, MALE' 20181,
REPUBLIC OF MALDIVES,
PHONE:+ (960) 332 6822 FAX: + (960) 333 2835
E-MAIL: design.development@mtcc.com.mv

PROJECT TITLE: MID HOSPITAL PROJECT	CLIENT & ADDRESS: MINISTRY OF HEALTH	DESIGN ARCHITECT: SURVEYING, DESIGN AND DEVELOPMENT SECTION			
		ENGINEER: IBRAHIM THOAM	STRUCTURAL CHECKER: ABDULLA RAMEEZ		
DRAWING TITLE: AS GIVEN	PROJECT LOCATION: -	ARCHITECT: AMINATH ZOONA	ARCHITECTURAL CHECKER: IRFAN WAHEED	PAPER: A3	SCALE: AS GVN
		DRAWN BY: AHMED IMAD	CHECKED BY: AMINATH SAMAHA	DATE: 02-07-2020	

REV	DESCRIPTION	DATE	APPR

SHEET IDENTIFICATION NUMBER: S5.16

SHEET TITLE: 87

COPYRIGHT All plans, sketches, drawings, graphic representations and specifications prepared by the Architect(s) & Engineer(s) are instruments of service. The copyright and ownership of both the design and these instruments of service belong to the Architect(s) & Engineer(s) and may not be used for any other project, or sold, or offered for sale by any party other than the Architect/Engineer unless the Architect/Engineer has given written consent. Copies of the documents submitted to the client prepared by the Architect/Engineer maybe used as they were intended; once; and on the same site and project.

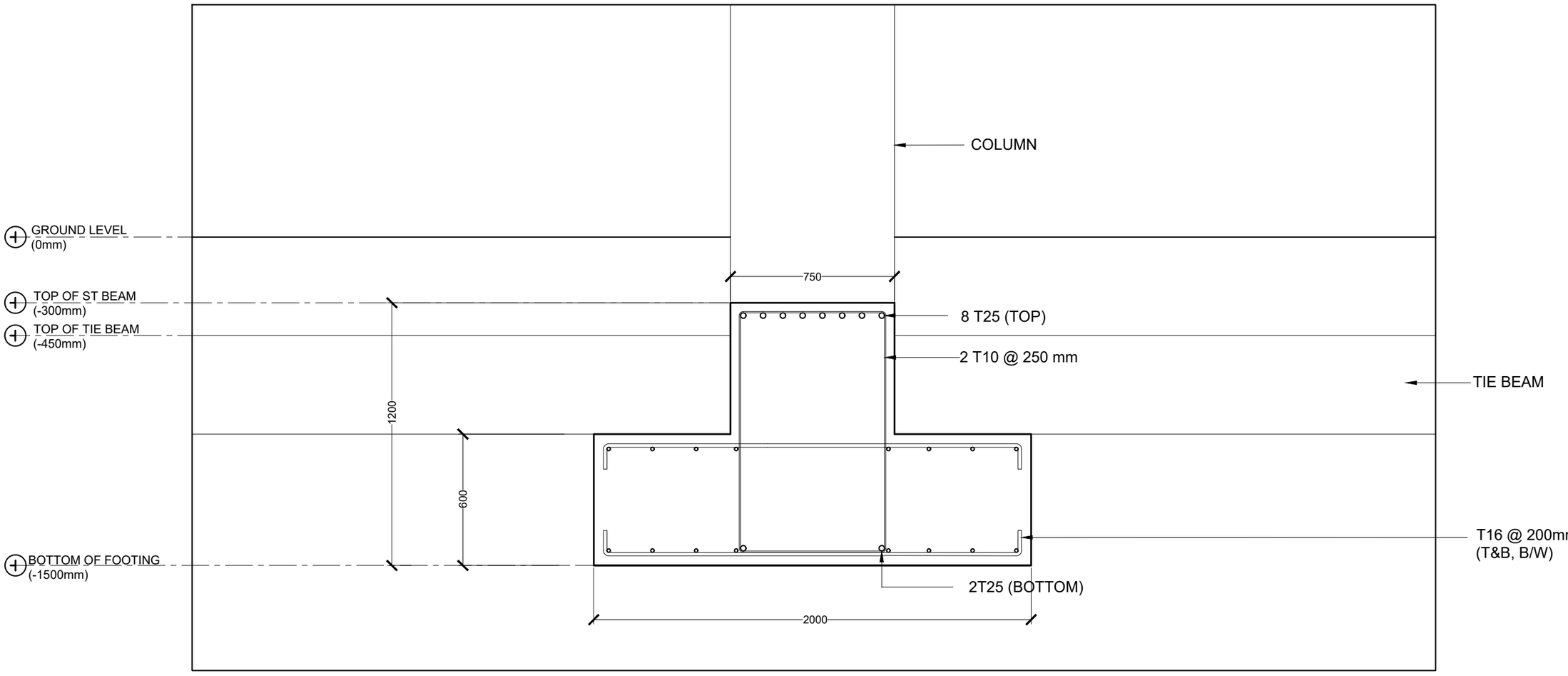

ST25 (MID-SPAN & EXTERIOR SUPPORTS)

STRIP FOOTING DETAILS

SCALE 1:20

0 0.1 0.2 0.4 0.8 METERS

M T C C
MALDIVES TRANSPORT & CONTRACTING COMPANY PLC
SURVEY,DESIGN AND DEVELOPMENT SECTION
CONSTRUCTION AND PROJECTS MANGEMENT DEPARTMENT,
MTCC TOWER, BODU THAKURUFAANU MAGU, MALE' 20181,
REPUBLIC OF MALDIVES.
PHONE: +(960) 332 6822,FAX: +(960) 333 2835
E-MAIL: design.development@mtcc.com.mv

PROJECT TITLE	MID HOSPITAL PROJECT
DRAWING TITLE	AS GIVEN
CLIENT & ADDRESS	MINISTRY OF HEALTH
PROJECT LOCATION	-
DESIGN ARCHITECT:	SURVEYING, DESIGN AND DEVELOPMENT SECTION
ENGINEER:	IBRAHIM THOAM
STRUCTURAL CHECKER:	ABDULLA RAMEEZ
ARCHITECT:	AMINATH ZOONA
ARCHITECTURAL CHECKER:	IRFAN WAHEED
PAPER	A3
SCALE	AS GVN
DRAWN BY:	AHMED IMAD
CHECKED BY:	AMINATH SAMAHA
DATE	02-07-2020

REV	DESCRIPTION	DATE	APPR

SHEET IDENTIFICATION NUMBER

S5.17

SHEET TITLE

88

COPYRIGHT All plans, sketches, drawings, graphic representations and specifications prepared by the Architect(s) & Engineer(s) are instruments of service. The copyright and ownership of both the design and these instruments of service belong to the Architect(s) & Engineer(s) and may not be used for any other project, or sold, or offered for sale by any party other than the Architect/Engineer unless the Architect/Engineer has given written consent. Copies of the documents submitted to the client prepared by the Architect/Engineer maybe used as they were intended, once, and on the same site and project.

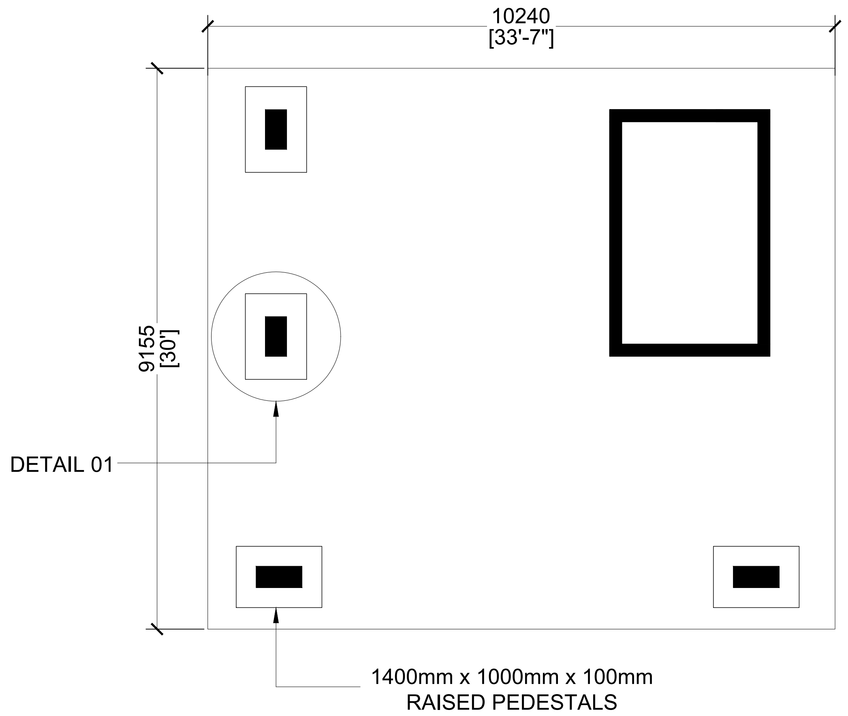

FOOTING F1 PLAN
(COMBINED MAT)

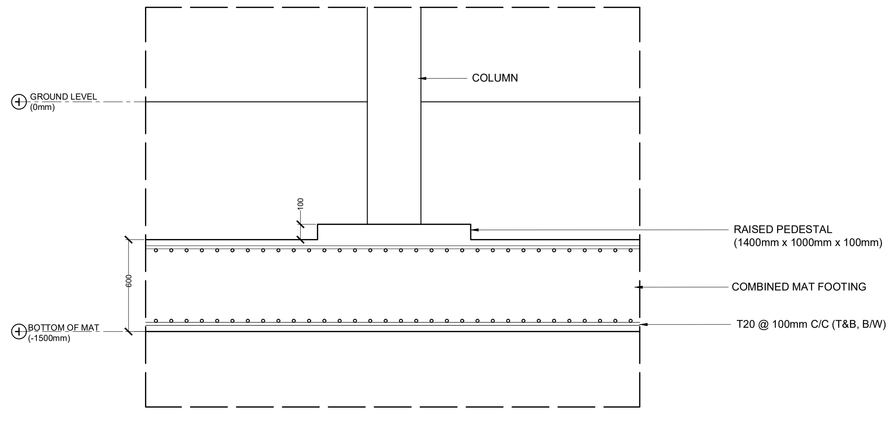

DETAIL 01
(FOOTING F1)

FOOTING F1 PLAN (COMBINED MAT)

SCALE 1:50

DETAIL 1 (FOOTING F1)

SCALE 1:20

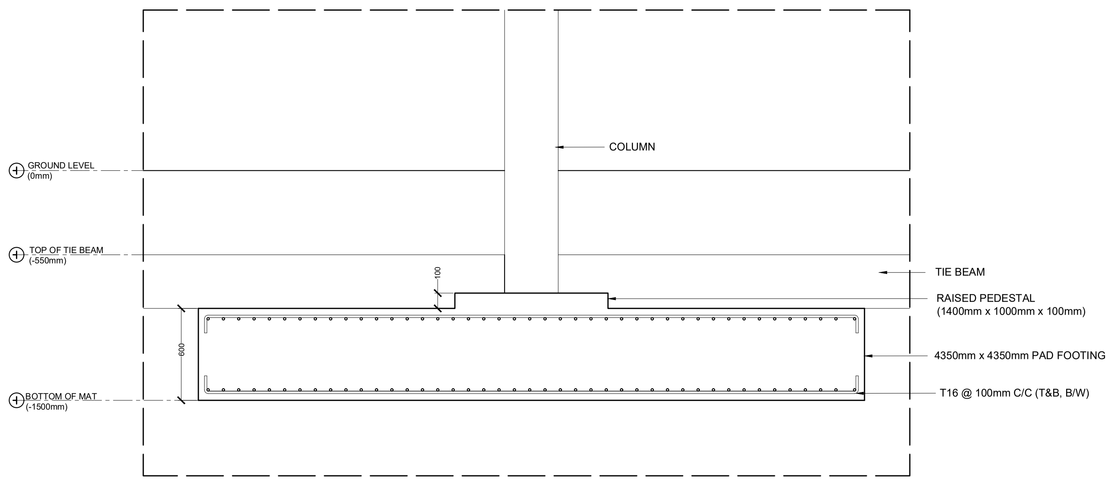

FOOTING F2 SECTION

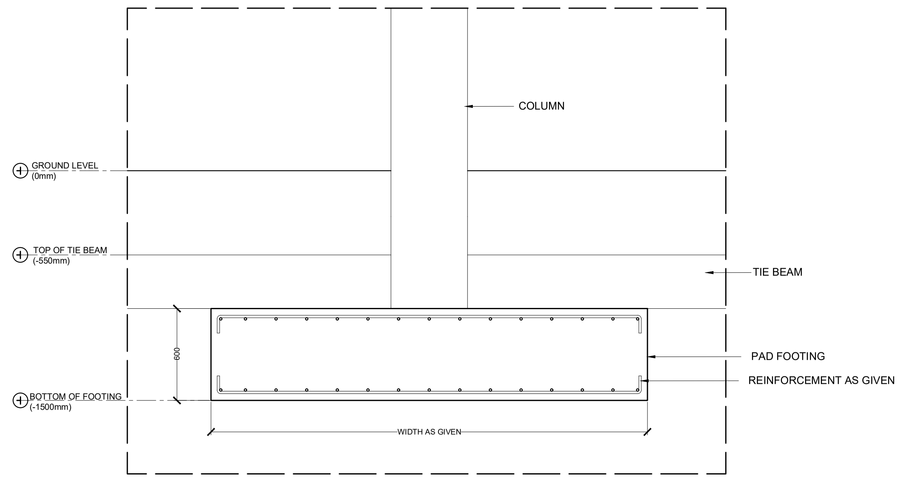

FOOTING F3 - F5 (TYPICAL SECTION)

PAD FOOTING	DIMENSIONS	REINFORCEMENT
F3	3900mm x 3900mm	T16 @ 125mm T&B, B/W
F4	3400mm x 3400mm	T16 @ 175mm T&B, B/W
F5	2850mm x 2850mm	T16 @ 200mm T&B, B/W

FOOTING F2 SECTION

SCALE 1:20

FOOTING F3 - F5 (TYPICAL SECTION)

SCALE 1:20

ARCHITECTS
ENGINEERS
PLANNERS

THIS DRAWING AND DESIGN IS THE COPYRIGHT OF THE ARCHITECT AND MUST NOT BE USED OR REPRODUCED WITHOUT PERMISSION. ALL DIMENSIONS ARE TO BE CHECKED ON SITE BEFORE COMMENCING WORK OR PREPARING SHOP DRAWINGS. DO NOT SCALE FROM THIS DRAWING.

NO.	DESCRIPTION	DATE
01	ISSUED FOR PERMIT	30.09.2025

PROPOSED RESIDENTIAL BUILDING
PLOT NO. 2, SECTOR 3, KHARGHAR, NAVI MUMBAI

DRAWING TITLE
FOOTING PLAN & DETAILS

DRAWN BY: Author
CHECKED BY: Checker
APPROVED BY: Approver
SCALE: AS SHOWN
DATE: 30.09.2025

DRAWING NO. S5.18
REV. 01

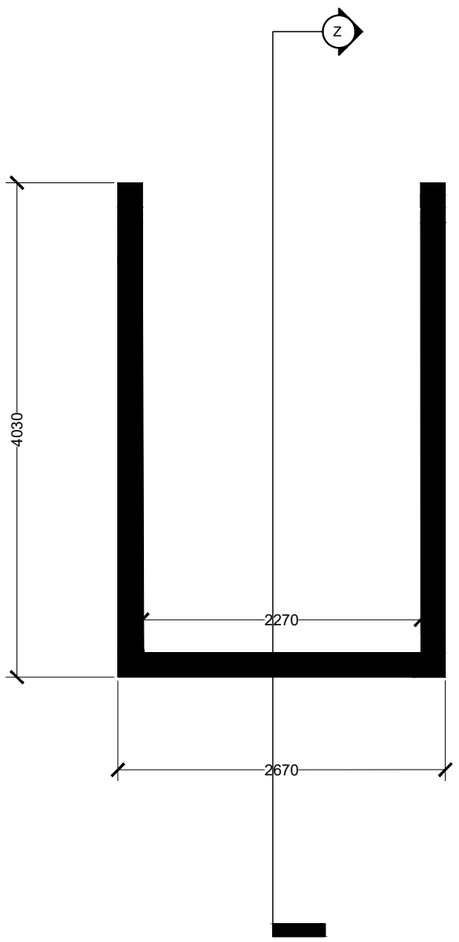

LIFT SHAFT PLAN

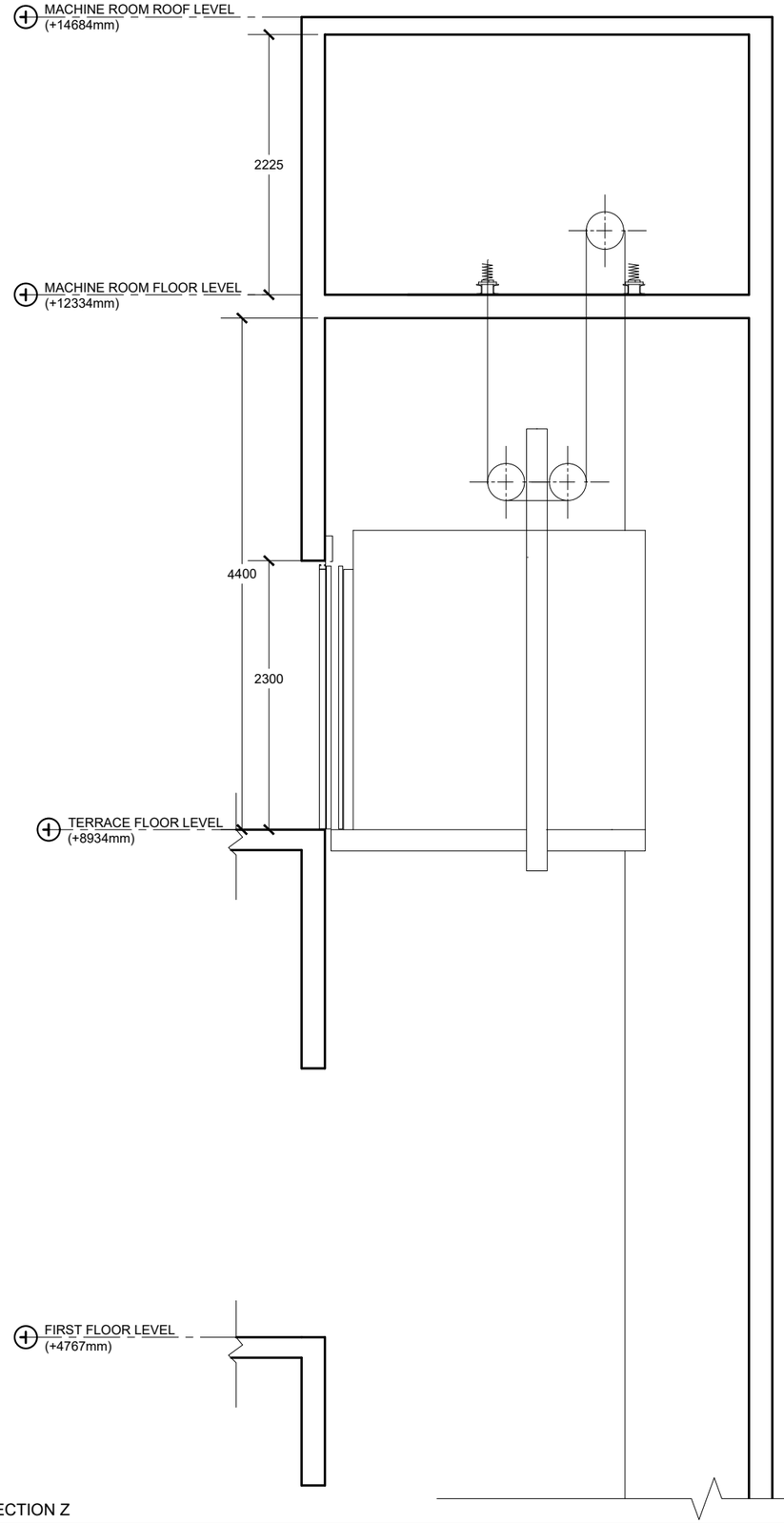

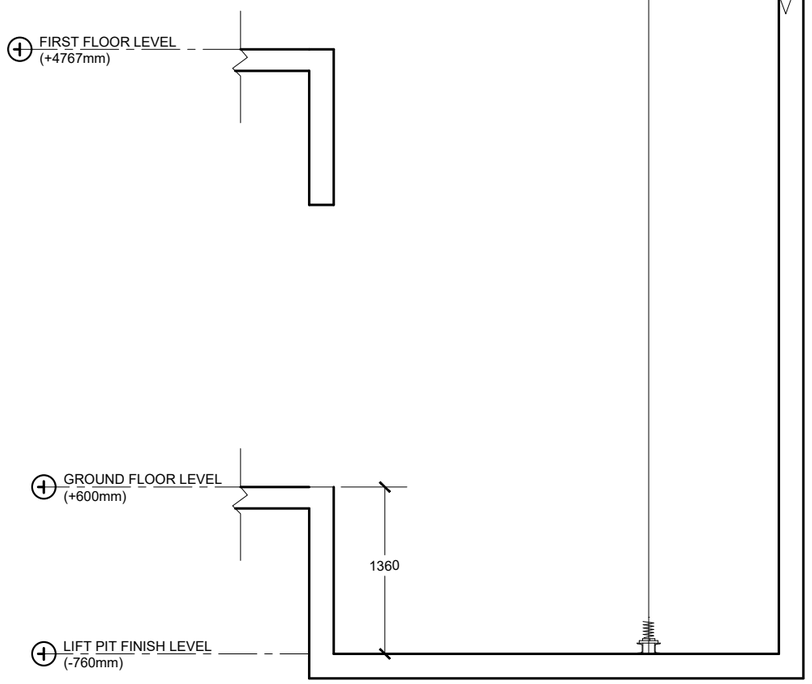

SECTION Z (CONTINUED)

LIFT SHAFT DETAILS

SCALE 1:50

0 0.25 0.5 1 2 METERS

SECTION Z

M T C C
MALDIVES TRANSPORT & CONTRACTING COMPANY PLC

SURVEY,DESIGN AND DEVELOPMENT SECTION
CONSTRUCTION AND PROJECTS MANGEMENT DEPARTMENT,
MTCC TOWER, BODU THAKURUFAANU MAGU, MALE' 20181,
REPUBLIC OF MALDIVES.
PHONE: +(960) 332 6822,FAX: +(960) 333 2835
E-MAIL: design.development@mtcc.com.mv

PROJECT TITLE	MID HOSPITAL PROJECT
DRAWING TITLE	AS GIVEN
CLIENT & ADDRESS	MINISTRY OF HEALTH
PROJECT LOCATION	-
DESIGN ARCHITECT:	SURVEYING, DESIGN AND DEVELOPMENT SECTION
ENGINEER:	IBRAHIM THOAM
STRUCTURAL CHECKER:	ABDULLA RAMEEZ
ARCHITECT:	AMINATH ZOONA
ARCHITECTURAL CHECKER:	IRFAN WAHEED
PAPER	A3
SCALE	AS GVN
DRAWN BY:	AHMED IMAD
CHECKED BY:	AMINATH SAMAHA
DATE	02-07-2020

REV	DESCRIPTION	DATE	APPR

SHEET IDENTIFICATION NUMBER

S5.19

SHEET TITLE

90

COPYRIGHT All plans, sketches, drawings, graphic representations and specifications prepared by the Architect(s) & Engineer(s) are instruments of service. The copyright and ownership of both the design and these instruments of service belong to the Architect(s) & Engineer(s) and may not be used for any other project, or sold, or offered for sale by any party other than the Architect/Engineer unless the Architect/Engineer has given written consent. Copies of the documents submitted to the client prepared by the Architect/Engineer maybe used as they were intended, once, and on the same site and project.